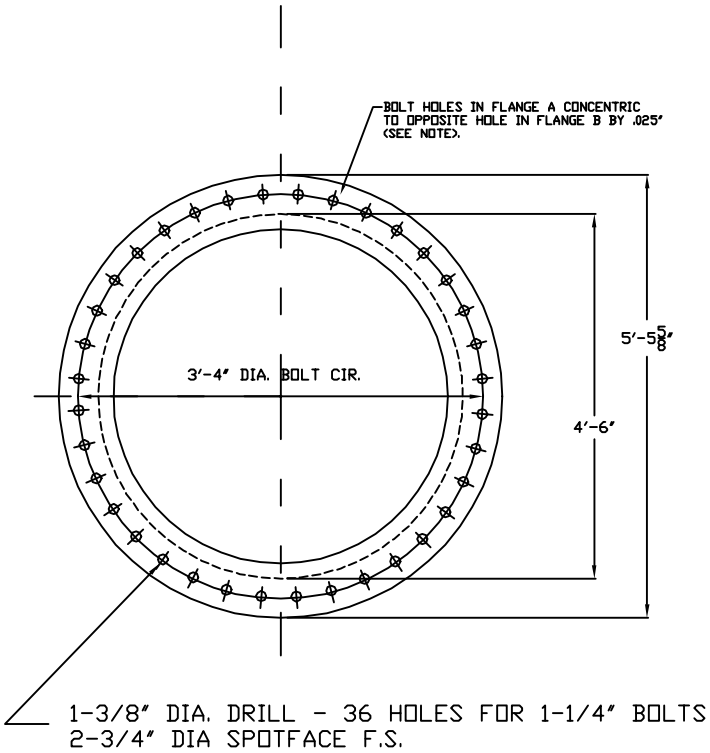


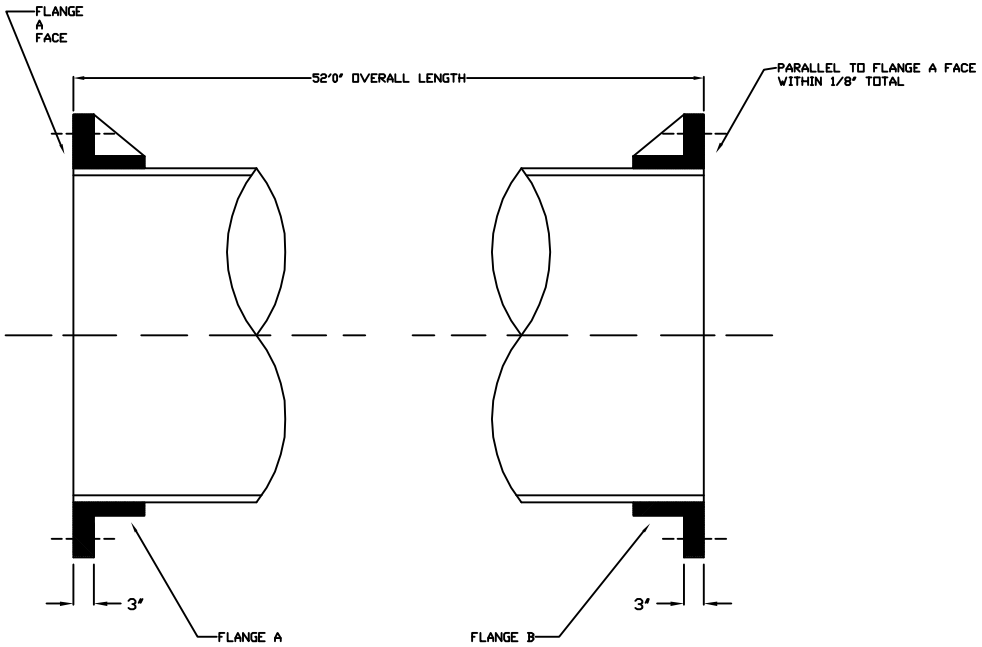


NOTE:

1. Contact COE Rep for any deviation in the tolerance specified.
2. The flanges shown are used Government flanges removed from old pipe
3. Welding at neck and ends of pipe to the flange not shown in this drawing

| | |
|---|---|
| U.S. ARMY CORPS OF ENGINEERS, ST. LOUIS, MO SERVICE BASE | |
| DREDGE POTTER PIPELINE DISCHARGE PIPES | |
| DRAWN BY: ART BASUEL | SCALE: NONE |
| DATE: 08/30/2006 | FILE: SK-1065 A |

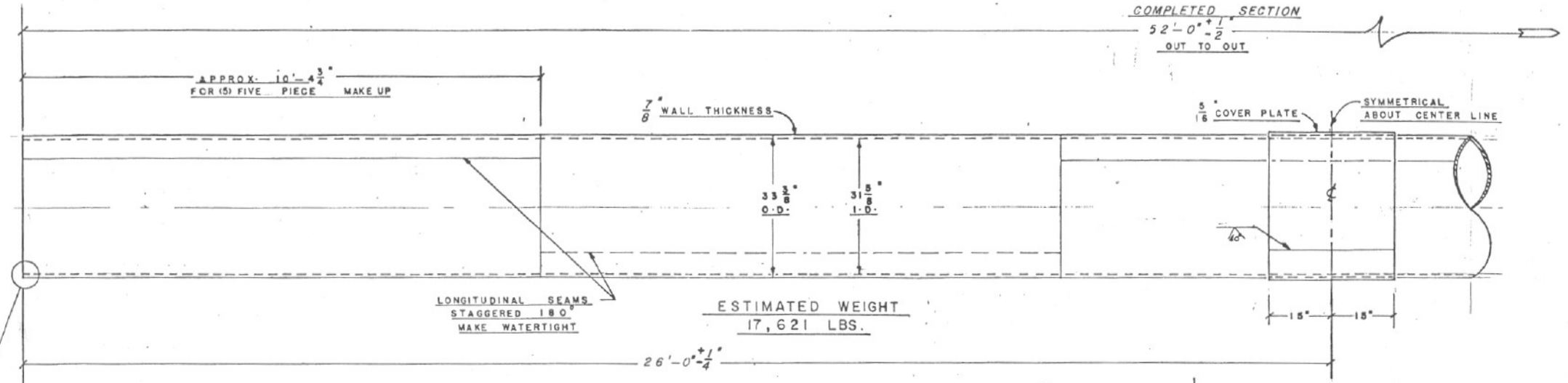


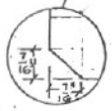

REF. NOTE:

1. EACH SECTION OF PIPE TO BE MADE OF NOT MORE THAN (7) SEVEN LENGTHS OF STEEL PLATE.
2. PREFERABLY MADE IN (5) FIVE LENGTHS.
3. MATERIAL - STEEL PLATE PER ASTM-242-TYPE-2
   ASTM-242-TYPE-2
   MANUFACTURED - IAW-ASTM-A-134
4. DIAMETER TOLERANCE - OUTSIDE DIAMETER SHALL BE 33 3/8" ± 1 PERCENT.
5. WEIGHT OF PIPE SHALL NOT VARY +10% -3.5% OF THE ESTIMATED WEIGHT.
6. CHAMFER 7/16" x 45° BOTH ENDS.

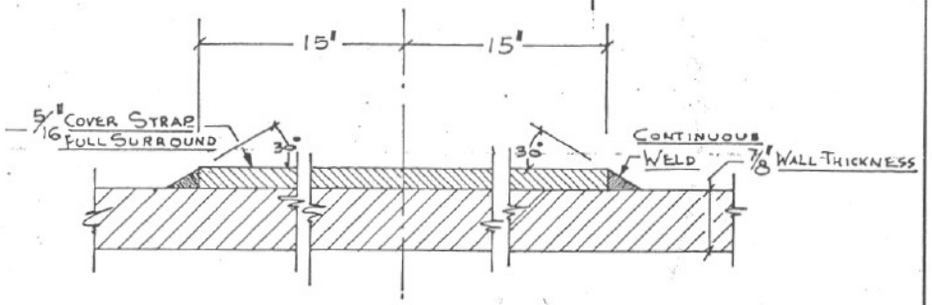


CENTER COVER STRAP

NO SCALE

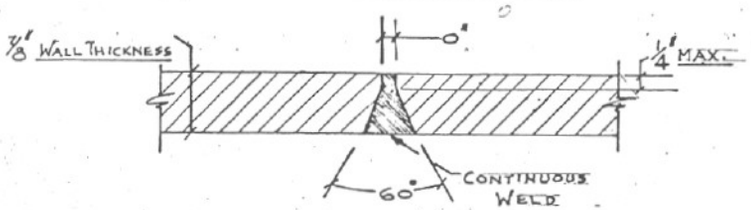


LONGITUDINAL & GIRTH SEAM

FOR MACHINE WELDING

NO SCALE

REF. NOTE:
REPRODUCED WITH MODIFICATIONS FROM DWG. NO. 171-62 DATED 11-70 MEMPHIS TENN.

| SYMBOL | DESCRIPTION | DATE | APPROVED |
|---|---|---|---|
| | REVISIONS | | |

DRAWN BY: J. KIERNS
TRACED BY:
CHECKED BY: A. BASUEL
DATE: OCT. 1981
DESIGNED BY:

SUBMITTED: HEAD, PLANT ENGR. & INSP. SEC.

APPROVED: CHIEF, PLANT BRANCH

APPROVED FOR THE DIST. ENGR.

CHIEF, OPERATIONS DIVISION

U. S. ARMY ENGINEER DISTRICT, ST. LOUIS
CORPS OF ENGINEERS
ST. LOUIS, MISSOURI

# DREDGE POTTER

## PONTOON PIPE

DRAWING NO. 171-62A

SCALE AS SHOWN | INV. NO. DACW 43 | SHEET 1 OF 1

171-62A

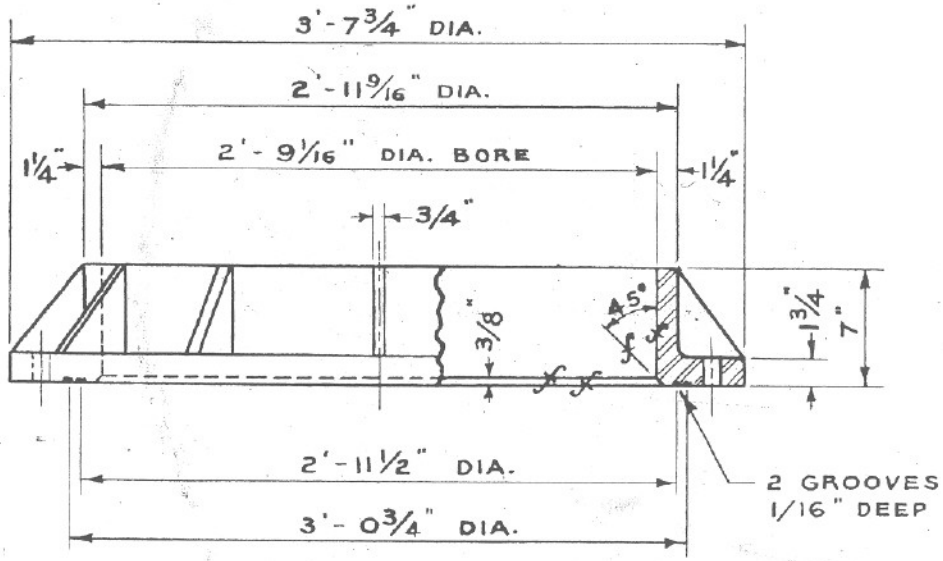


## FLANGE

PATT. NO. 2258 - CAST STEEL

EST. ROUGH WT. 645 LBS.

SCALE: 1" = 1'-0"

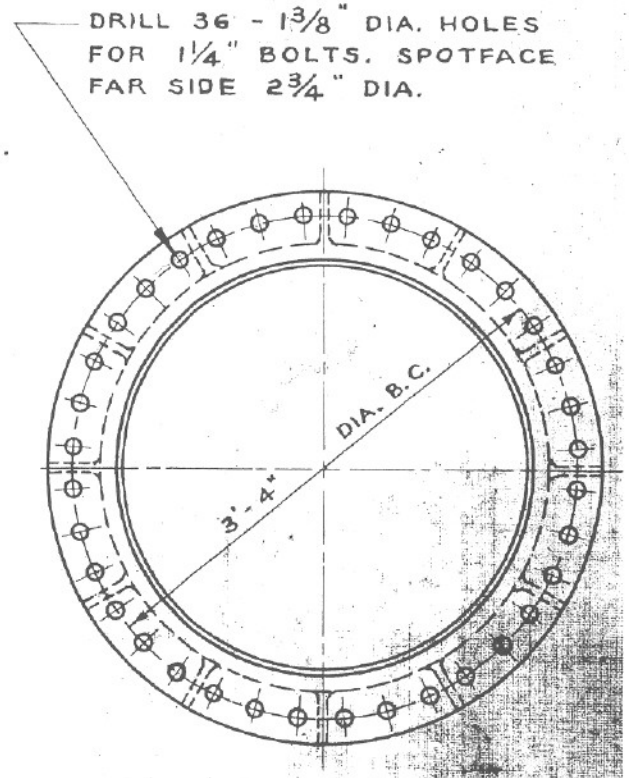


C. S. FLANGE - PATT. NO. 2258

PIPE END

| SYMBOL | DESCRIPTION | DATE | APP'D |
|---|---|---|---|
| | REVISION | | |

DRAWN BY:
TRACED BY:
CHECKED BY:
DATE:
DESIGNED BY:

SUBMITTED
HEAD PLANT ENGR. & INSP.

APPROVED
CHIEF, PLANT BRANCH

APPROVED
CHIEF, OPERATIONS DIVISION

U.S. ARMY ENGINEER DISTRICT, ST LOUIS
CORPS OF ENGINEERS
ST. LOUIS, MISSOURI

DREDGE POTTER

DISCHARGE PIPE FLANGE DETAILS

DRAWING NO. SK-912A

SCALE: NONE | DIV. NO. | SHEET OF