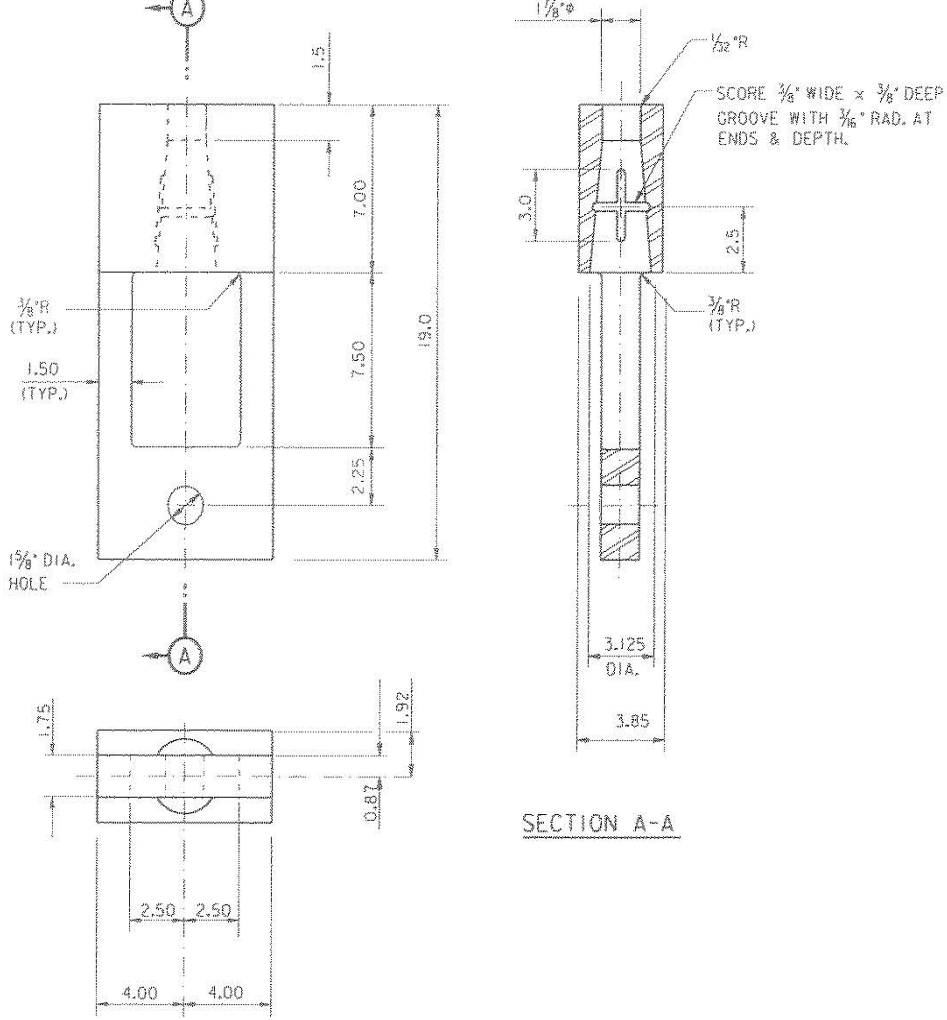

SECTION A-A

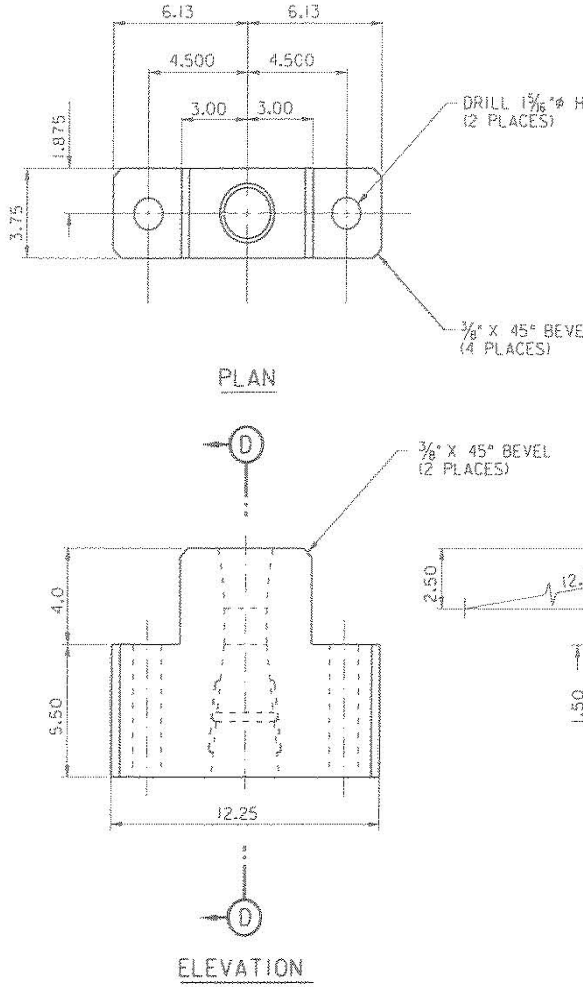

PLAN

ELEVATION

COUNTERWEIGHT GATE SOCKET MK 30/24-1

ASTM A743, GR.CF-8 WT. = 85 LBS. EA. NO. REQ'D. 24

SCALE: 3" = 1'-0"

0 3" 6" 12"

COUNTER WEIGHT BASKET CONNECTION

ASTM A743, GR.CF-8 WT. = 83 LBS. E

SCALE: 3" = 1'-0"

0 3" 6" 12"

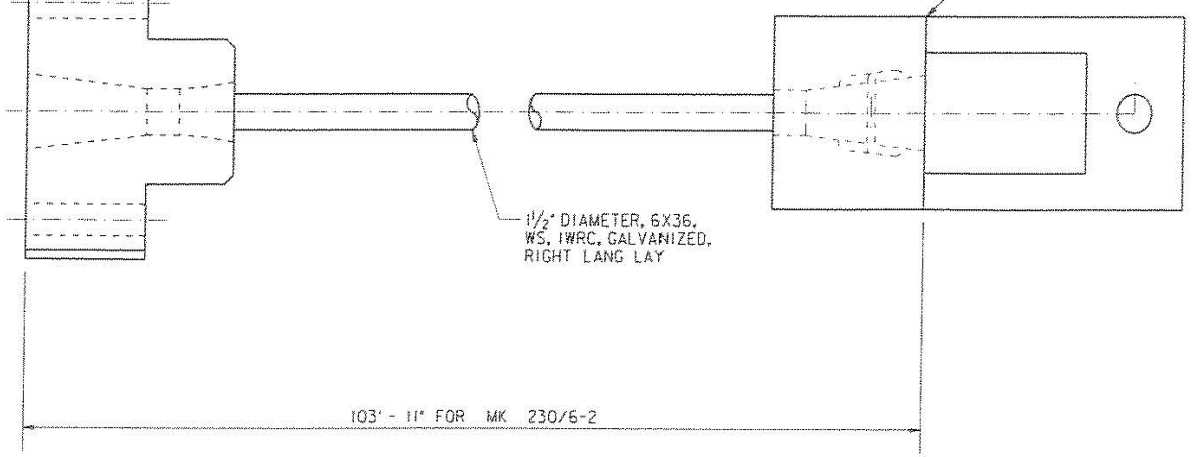

COUNTERWEIGHT WIRE ROPE ASSEMBLY

DOWNSTREAM LEAF MK 230/6-2 NO. REQ'D. 12

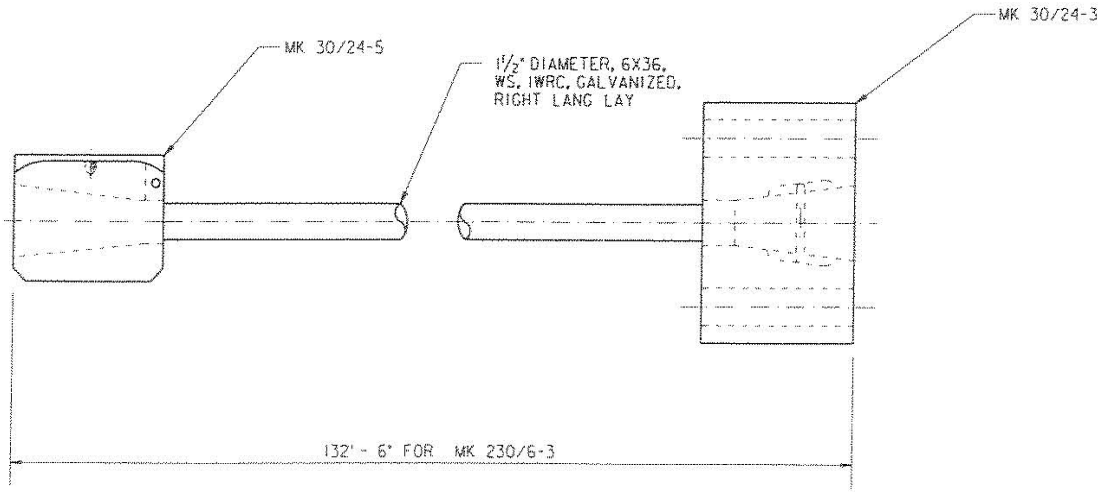

GATE HOIST WIRE ROPE ASSEMBLY

DOWNSTREAM LEAF MK 230/6-3 NO. REQ'D. 24

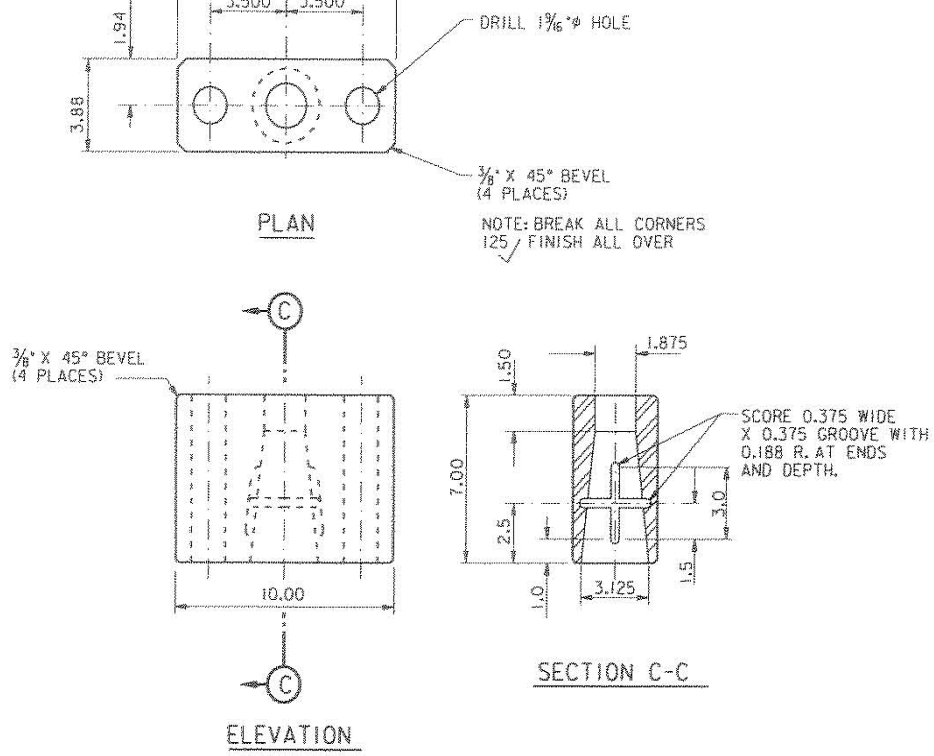

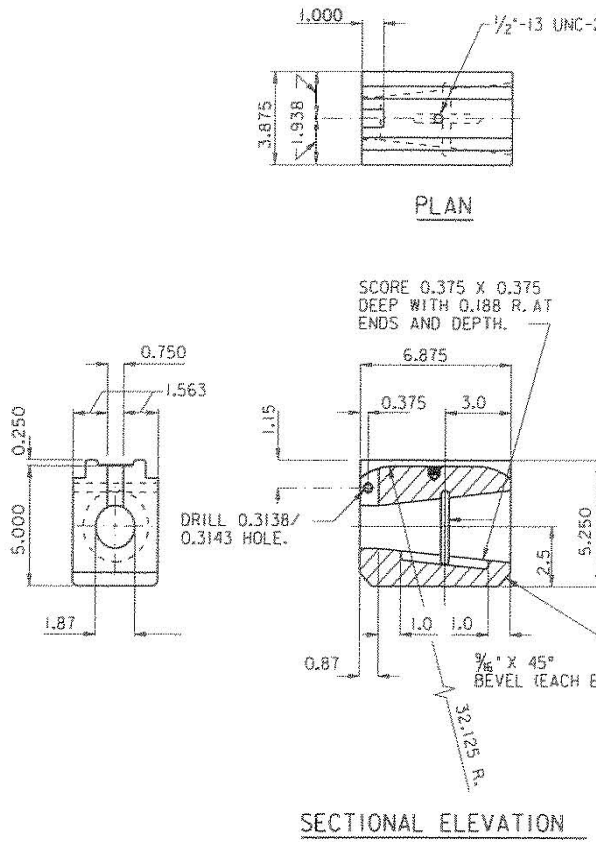

HOIST GATE CONNECTION SOCKET MK 30/24-3

ASTM A743, GR.CF-8 WT. = 60 LBS. EA. NO. REQ'D. 48

SCALE: 3" = 1'-0"

0 3" 6" 12"

HOIST DRUM CONNECTION SOCKET

ASTM A743, GR.CF-8 WT. = 40 LBS. EA.

SCALE: 3" = 1'-0"

0 3" 6" 12"

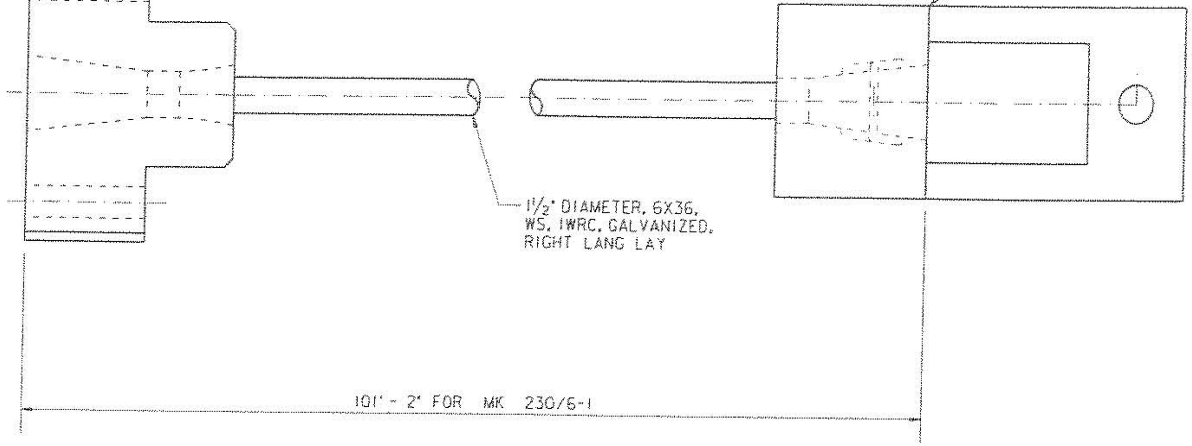

COUNTERWEIGHT WIRE ROPE ASSEMBLY

MIDDLE LEAF MK 230/6-1 NO. REQ'D. 12

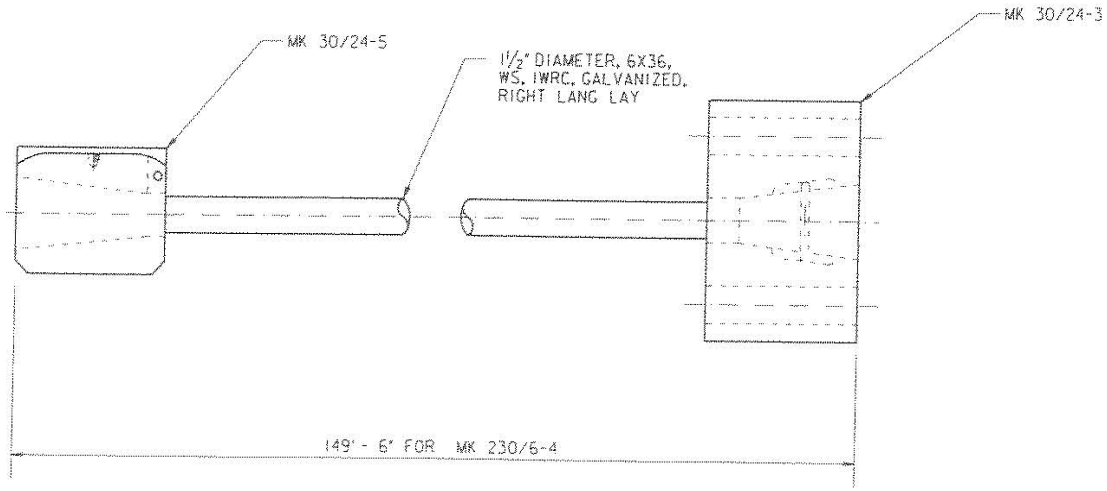

GATE HOIST WIRE ROPE ASSEMBLY

MIDDLE LEAF MK 230/6-4 NO. REQ'D. 24