MELVIN PRICE LOCKS AND DAM

UPPER MISSISSIPPI RIVER BASIN

LOCKS AND DAM PROJECT

LIFT GATE DRIVES AND MOTORS SUPPLY CONTRACT

US Army Corps
of Engineers

ST. LOUIS DISTRICT

Leaders in Customer Care

NOVEMBER 2006

CONTRACT DRAWINGS

DRAWING NO. O-OL-1	TITLE
	COVER
	GENERAL
G-1	INDEX OF CONTRACT DRAWINGS
	ELECTRICAL
E-1	DOWNSTREAM LEAF MASTER DRIVE CONTROL SCHEMATICS, SHEET 1
E-2	DOWNSTREAM LEAF MASTER DRIVE CONTROL SCHEMATICS, SHEET 2
E-3	DOWNSTREAM LEAF MASTER DRIVE CONTROL SCHEMATICS, SHEET 3
E-4	DOWNSTREAM LEAF SLAVE DRIVE CONTROL SCHEMATICS, SHEET 1
E-5	DOWNSTREAM LEAF SLAVE DRIVE CONTROL SCHEMATICS, SHEET 2
E-6	DOWNSTREAM LEAF SLAVE DRIVE CONTROL SCHEMATICS, SHEET 3
E-7	MIDDLE LEAF MASTER DRIVE CONTROL SCHEMATICS, SHEET 1
E-8	MIDDLE LEAF MASTER DRIVE CONTROL SCHEMATICS, SHEET 2
E-9	MIDDLE LEAF MASTER DRIVE CONTROL SCHEMATICS, SHEET 3
E-10	MIDDLE LEAF SLAVE DRIVE CONTROL SCHEMATICS, SHEET 1
E-11	MIDDLE LEAF SLAVE DRIVE CONTROL SCHEMATICS, SHEET 2
E-12	MIDDLE LEAF SLAVE DRIVE CONTROL SCHEMATICS, SHEET 3
E-13	UPSTREAM LEAF MASTER DRIVE CONTROL SCHEMATICS, SHEET 1
E-14	UPSTREAM LEAF MASTER DRIVE CONTROL SCHEMATICS, SHEET 2
E-15	UPSTREAM LEAF MASTER DRIVE CONTROL SCHEMATICS, SHEET 3
E-16	UPSTREAM LEAF SLAVE DRIVE CONTROL SCHEMATICS, SHEET 1
E-17	UPSTREAM LEAF SLAVE DRIVE CONTROL SCHEMATICS, SHEET 2
E-18	UPSTREAM LEAF SLAVE DRIVE CONTROL SCHEMATICS, SHEET 3

US Army Corps of Engineers
ST. LOUIS DISTRICT

Symbol	Description	Date	Appr.
	Revisions		

Designed by: BRANDON B. LEWIS
Drawn by: B. LEWIS
Ckd by: S. NIEUKIRK
Reviewed by: SHANE M. NIEUKIRK, P.E.
APPROVED: THOMAS J. QUIGLEY, P.E. Chief, Design Branch
Date: XXX
SUBMITTED: STEPHEN G. FARKAS, P.E. Chief, Struct/Arch/Mech/Elec Section
File name:
Plot date: XXXX

U.S. ARMY ENGINEER DISTRICT
CORPS OF ENGINEERS
ST. LOUIS, MISSOURI

UPPER MISSISSIPPI RIVER BASIN
MELVIN PRICE LOCKS AND DAM PROJECT

MELVIN PRICE LOCKS AND DAM
LIFT GATE DRIVES & MOTOR REPLACEMENT
ELECTRICAL EQUIPMENT SUPPLY CONTRACT
INDEX OF CONTRACT DRAWINGS

M-MP-12/ G-1
DRAWING NUMBER

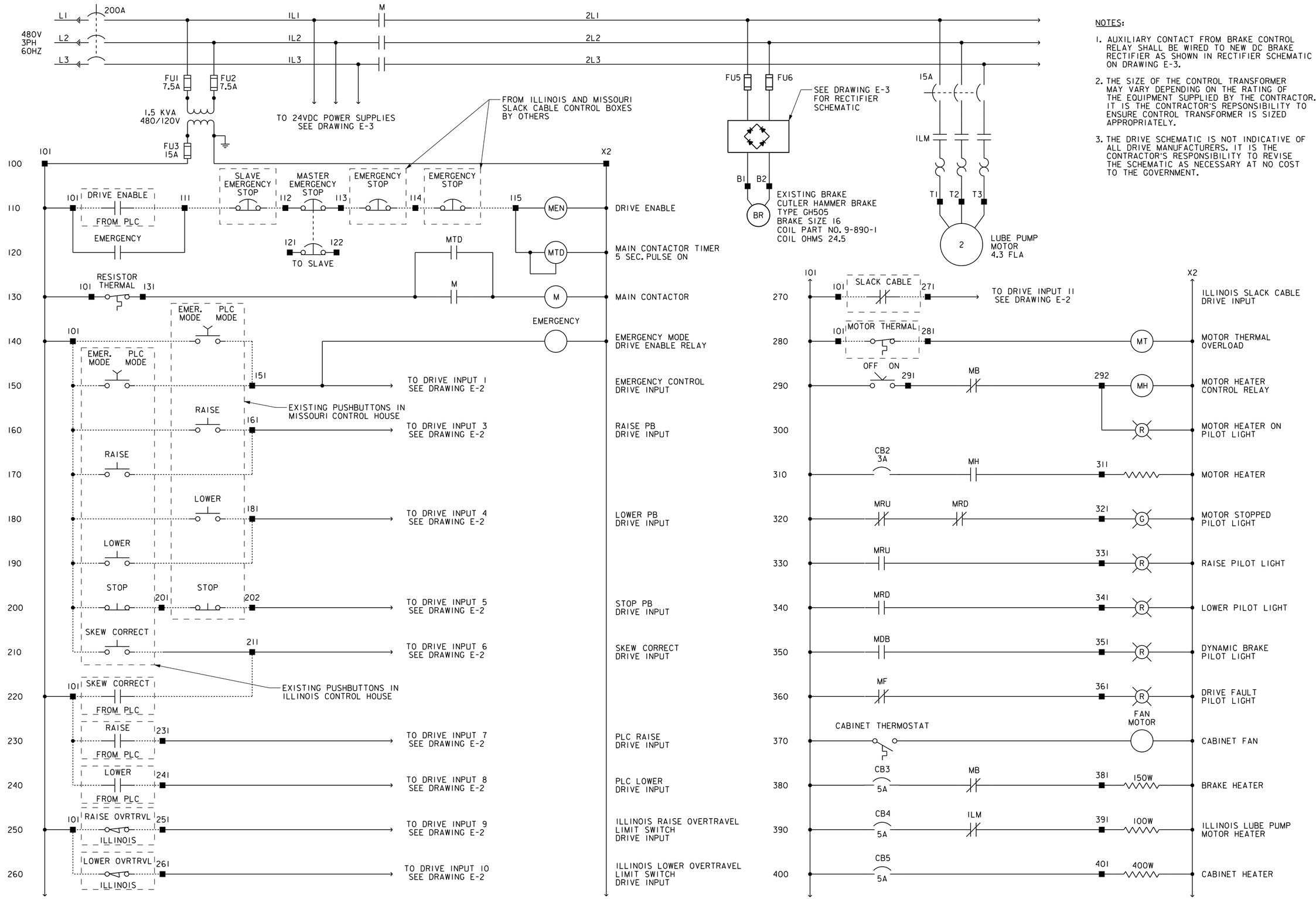

NOTES:

1. AUXILIARY CONTACT FROM BRAKE CONTROL RELAY SHALL BE WIRED TO NEW DC BRAKE RECTIFIER AS SHOWN IN RECTIFIER SCHEMATIC ON DRAWING E-3.
2. THE SIZE OF THE CONTROL TRANSFORMER MAY VARY DEPENDING ON THE RATING OF THE EQUIPMENT SUPPLIED BY THE CONTRACTOR. IT IS THE CONTRACTOR'S REPSONSIBILITY TO ENSURE CONTROL TRANSFORMER IS SIZED APPROPRIATELY.
3. THE DRIVE SCHEMATIC IS NOT INDICATIVE OF ALL DRIVE MANUFACTURERS. IT IS THE CONTRACTOR'S RESPONSIBILITY TO REVISE THE SCHEMATIC AS NECESSARY AT NO COST TO THE GOVERNMENT.

US Army Corps of Engineers
ST. LOUIS DISTRICT

Symbol	Description	Date	Appr.
	Revisions		

Designed by: BRANDON B. LEWIS
Drawn by: BBL
Ckd by: SAM
Reviewed by: SHANE M. NIEZLWIRK, P.E.
APPROVED: THOMAS S. QUIGLEY, P.E. Chief, Design Branch
Date: XXX
SUBMITTED: STEPHEN G. FARKAS, P.E. Chief, Struct/Arch/Mech/Elec Section
File name:
Plot date: XXXX

U.S. ARMY ENGINEER DISTRICT CORPS OF ENGINEERS ST. LOUIS, MISSOURI

UPPER MISSISSIPPI RIVER BASIN

MELVIN PRICE LOCKS AND DAM PROJECT

MELVIN PRICE LOCKS AND DAM
LIFT GATE DRIVES & MOTOR REPLACEMENT

ELECTRICAL EQUIPMENT SUPPLY CONTRACT

DOWNSTREAM LEAF MASTER DRIVE CONTROL SCHEMATICS SHEET 1

M-MP-12/E-1

DRAWING NUMBER

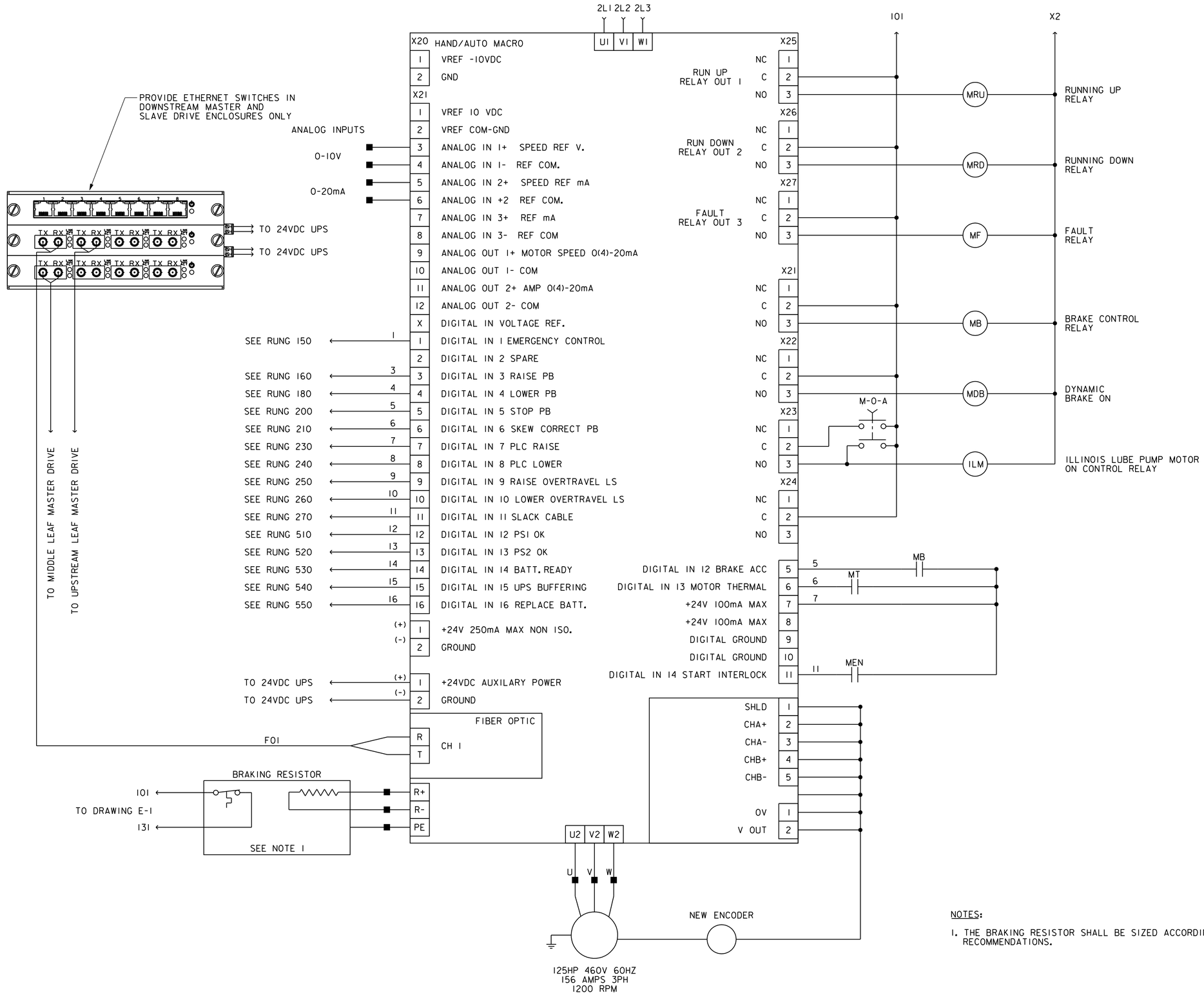

NOTES:

1. THE BRAKING RESISTOR SHALL BE SIZED ACCORDING TO THE MANUFACTURER'S RECOMMENDATIONS.

US Army Corps of Engineers
ST. LOUIS DISTRICT

Symbol	Description	Date	Appr.
	Revisions		

Designed by: BRANDON B. LEWIS
Drawn by: BBL
Chd by: BMW
Reviewed by: SHANE M. NIELKIRK, P.E.
APPROVED: THOMAS J. QUIGLEY, P.E. Chief, Design Branch
Date: XXX
SUBMITTED: STEPHEN G. FARKAS, P.E. Chief, Struct/Arch/Mech/Elec Section
File name:
Plot date: XXXX

U.S. ARMY ENGINEER DISTRICT
CORPS OF ENGINEERS
ST. LOUIS, MISSOURI

UPPER MISSISSIPPI RIVER BASIN
MELVIN PRICE LOCKS AND DAM PROJECT

MELVIN PRICE LOCKS AND DAM
LIFT GATE DRIVES & MOTOR REPLACEMENT

ELECTRICAL EQUIPMENT SUPPLY CONTRACT

DOWNSTREAM LEAF MASTER DRIVE
CONTROL SCHEMATICS
SHEET 2

M-MP-12/E-2

DRAWING NUMBER

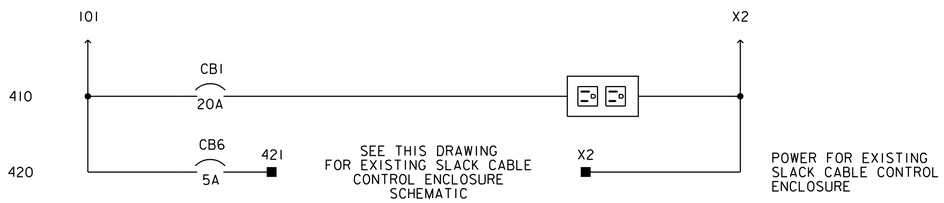

RECEPTACLE AND SLACK CABLE ENCLOSURE POWER WIRING

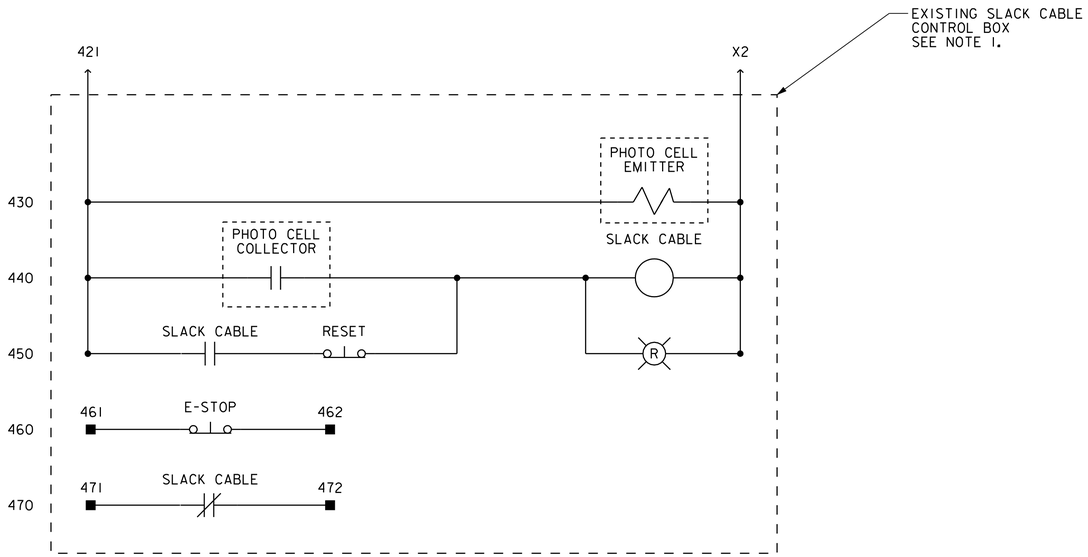

SLACK CABLE CONTROL ENCLOSURE DETAIL

(DOWNSTREAM AND MIDDLE LEAVES ONLY)

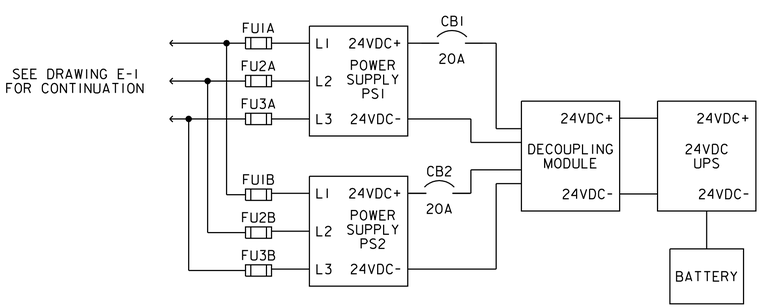

POWER SUPPLY BLOCK DIAGRAM

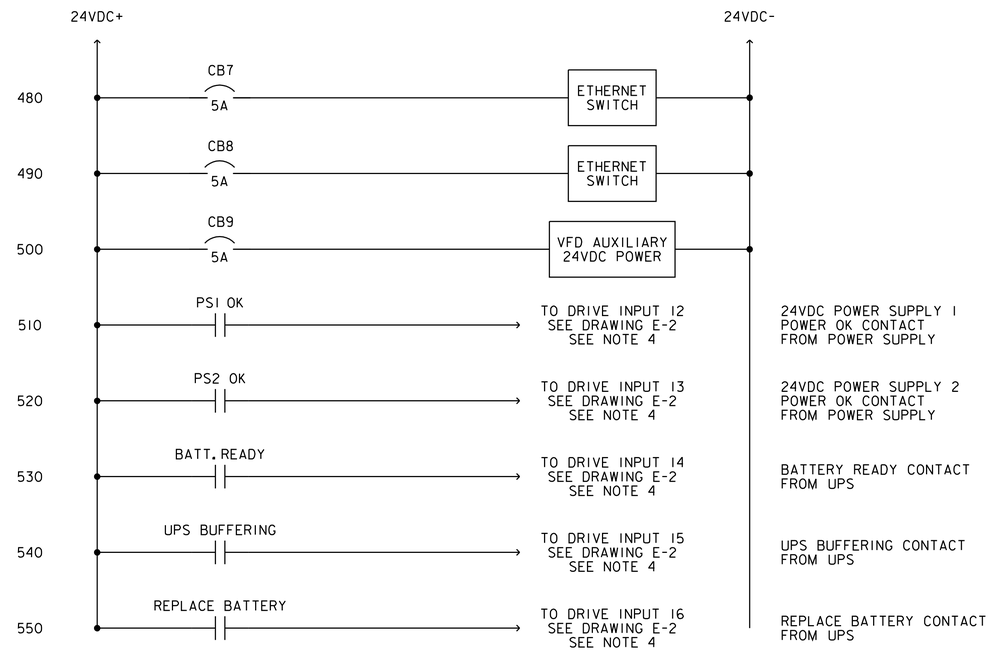

24VDC WIRING DIAGRAM

(PRIMARY SIDE OF RECTIFIER SHALL BE FUSED. FU5 & FU6 SHOWN ON DRAWING E-1)

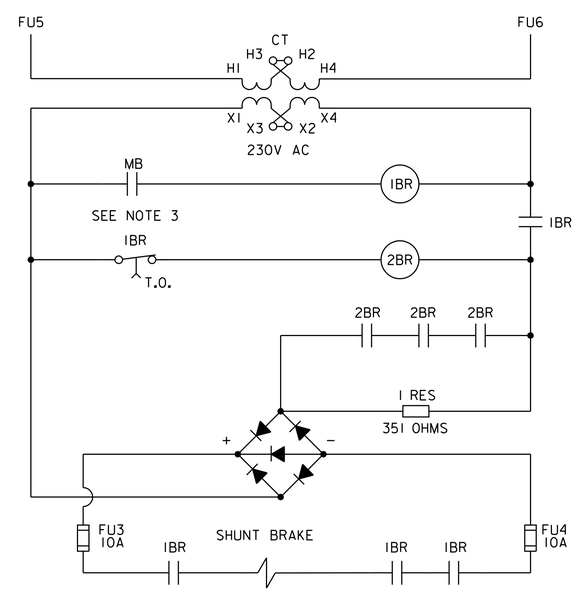

DC BRAKE RECTIFIER SCHEMATIC

SEE NOTE 2

NOTES:

1. THE EXISTING SLACK CABLE CONTROL ENCLOSURE IS SHOWN FOR INFORMATION ONLY. THE CONTRACTOR SHALL PROVIDE TERMINAL BLOCKS TO POWER THIS ENCLOSURE FROM THE VFD CONTROL TRANSFORMER.
2. RECTIFIER PROVIDED COMPLETE FROM CUTLER-HAMMER MODLE NO. GH515ED17-4.
3. CONNECTION SHALL BE MADE FROM CONTACT ON "BRAKE" CONTROL RELAY TO RECTIFIER CIRCUIT AS SHOWN.
4. CONTRACTOR SHALL PROVIDE RELAYS AS NECESSARY TO INTERFACE WITH DRIVE.

US Army Corps of Engineers
ST. LOUIS DISTRICT

Symbol	Description	Date	Appr.
	Revisions		

Designed by: BRANDON B. LEWIS
Drawn by: BBL
Ckd by: SWN
Dates: XXX
SUBMITTED: STEPHEN G. FARKAS, P.E. Chief, Struct/Arch/Mech/Elec Section
Reviewed by: SHANE M. NIELSKIRK, P.E.
APPROVED: THOMAS J. QUIGLEY, P.E. Chief, Design Branch
File name:
Plot date: XXXX

U.S. ARMY ENGINEER DISTRICT
CORPS OF ENGINEERS
ST. LOUIS, MISSOURI

UPPER MISSISSIPPI RIVER BASIN

MELVIN PRICE LOCKS AND DAM PROJECT

MELVIN PRICE LOCKS AND DAM
LIFT GATE DRIVES & MOTOR REPLACEMENT

ELECTRICAL EQUIPMENT SUPPLY CONTRACT
DOWNSTREAM LEAF MASTER DRIVE
CONTROL SCHEMATICS
SHEET 3

M-MP-12/E-3

DRAWING NUMBER

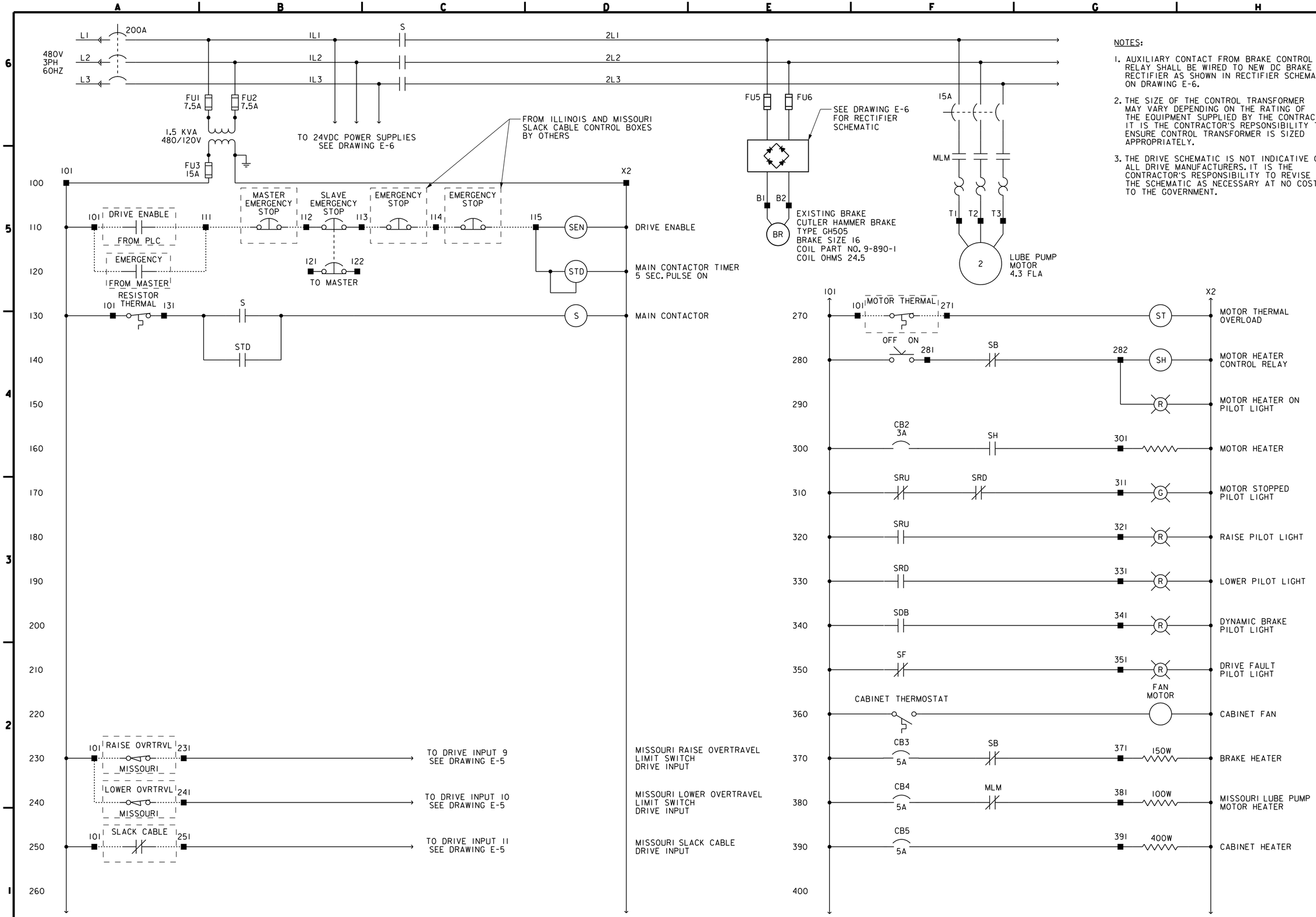

NOTES:

1. AUXILIARY CONTACT FROM BRAKE CONTROL RELAY SHALL BE WIRED TO NEW DC BRAKE RECTIFIER AS SHOWN IN RECTIFIER SCHEMATIC ON DRAWING E-6.
2. THE SIZE OF THE CONTROL TRANSFORMER MAY VARY DEPENDING ON THE RATING OF THE EQUIPMENT SUPPLIED BY THE CONTRACTOR. IT IS THE CONTRACTOR'S REPSONSIBILITY TO ENSURE CONTROL TRANSFORMER IS SIZED APPROPRIATELY.
3. THE DRIVE SCHEMATIC IS NOT INDICATIVE OF ALL DRIVE MANUFACTURERS. IT IS THE CONTRACTOR'S RESPONSIBILITY TO REVISE THE SCHEMATIC AS NECESSARY AT NO COST TO THE GOVERNMENT.

US Army Corps of Engineers
ST. LOUIS DISTRICT

Symbol	Description	Date	Appr.
	Revisions		

Designed by: BRANDON B. LEWIS
Drawn by: BBL
Ckd by: SAW
Reviewed by: SHANE M. NIEZWIRK, P.E.
APPROVED: THOMAS J. QUIGLEY, P.E. Chief, Design Branch
Date: XXX
SUBMITTED: STEPHEN G. FARKAS, P.E. Chief, Struct/Arch/Mech/Elec Section
File name:
Plot date: XXXX

U.S. ARMY ENGINEER DISTRICT CORPS OF ENGINEERS ST. LOUIS, MISSOURI

UPPER MISSISSIPPI RIVER BASIN

MELVIN PRICE LOCKS AND DAM PROJECT

MELVIN PRICE LOCKS AND DAM
LIFT GATE DRIVES & MOTOR REPLACEMENT

ELECTRICAL EQUIPMENT SUPPLY CONTRACT

DOWNSTREAM LEAF SLAVE DRIVE CONTROL SCHEMATICS SHEET 1

M-MP-12/E-4

DRAWING NUMBER

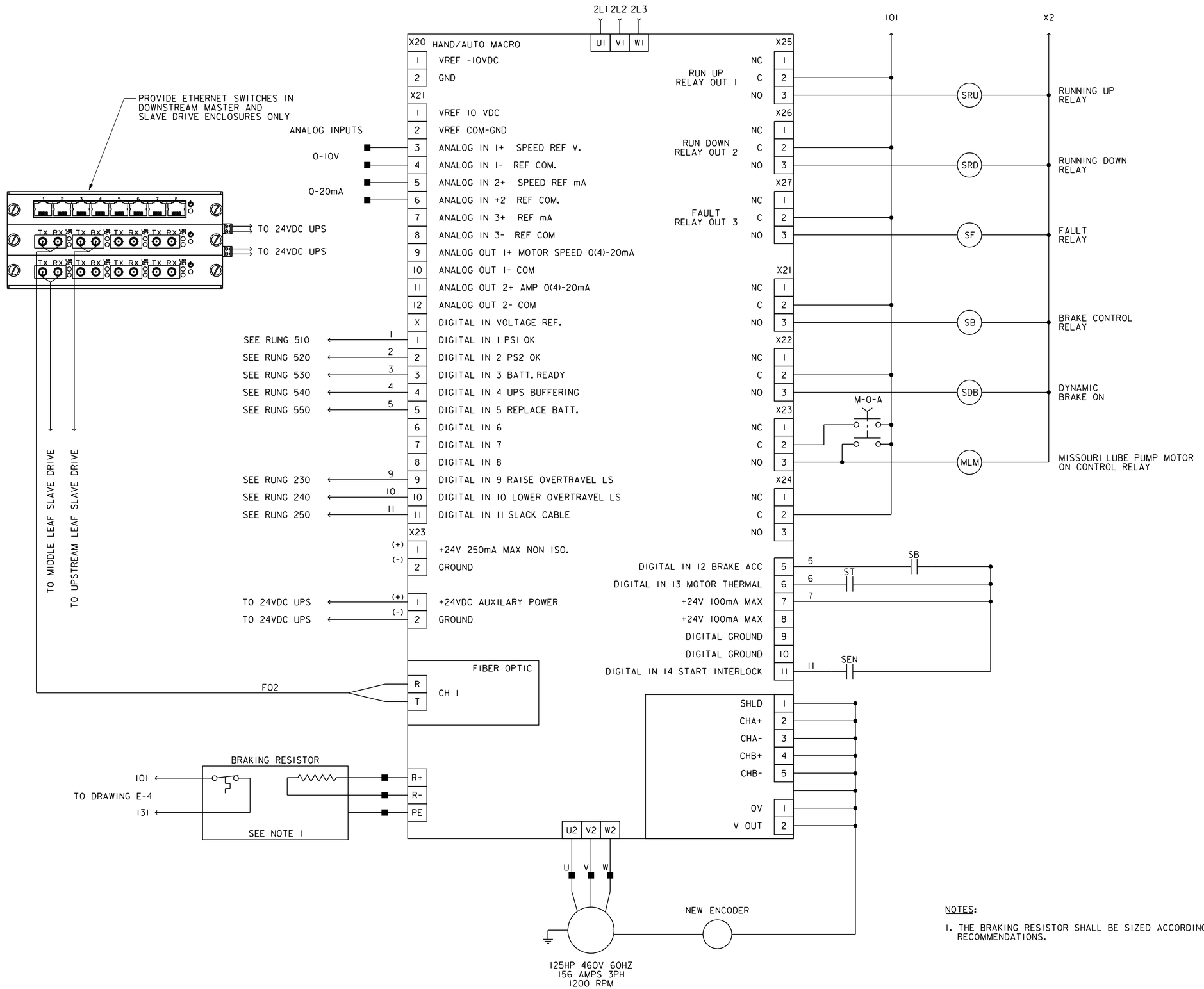

NOTES:

1. THE BRAKING RESISTOR SHALL BE SIZED ACCORDING TO THE MANUFACTURER'S RECOMMENDATIONS.

US Army Corps of Engineers
ST. LOUIS DISTRICT

Symbol	Description	Date	Appr.
	Revisions		

Designed by: BRANDON B. LEWIS
Drawn by: BB
Ckd by: SMN
Reviewed by: SHANE M. NIELKIRK, P.E.
APPROVED: THOMAS J. QUIGLEY, P.E. Chief, Design Branch
Date: XXX
SUBMITTED: STEPHEN G. FARKAS, P.E. Chief, Struct/Arch/Mech/Elec Section
File name:
Plot date: XXXX

U.S. ARMY ENGINEER DISTRICT
CORPS OF ENGINEERS
ST. LOUIS, MISSOURI

UPPER MISSISSIPPI RIVER BASIN

MELVIN PRICE LOCKS AND DAM PROJECT

MELVIN PRICE LOCKS AND DAM
LIFT GATE DRIVES & MOTOR REPLACEMENT

ELECTRICAL EQUIPMENT SUPPLY CONTRACT

DOWNSTREAM LEAF SLAVE DRIVE
CONTROL SCHEMATICS
SHEET 2

M-MP-12/E-5

DRAWING NUMBER

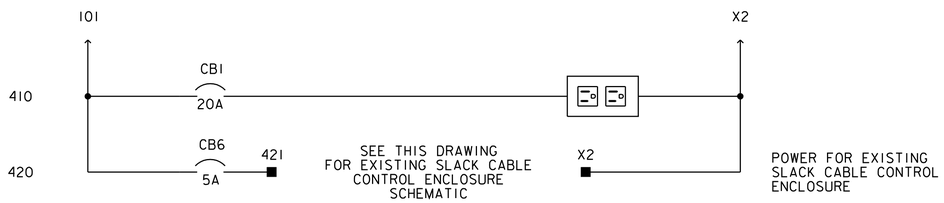

RECEPTACLE AND SLACK CABLE ENCLOSURE POWER WIRING

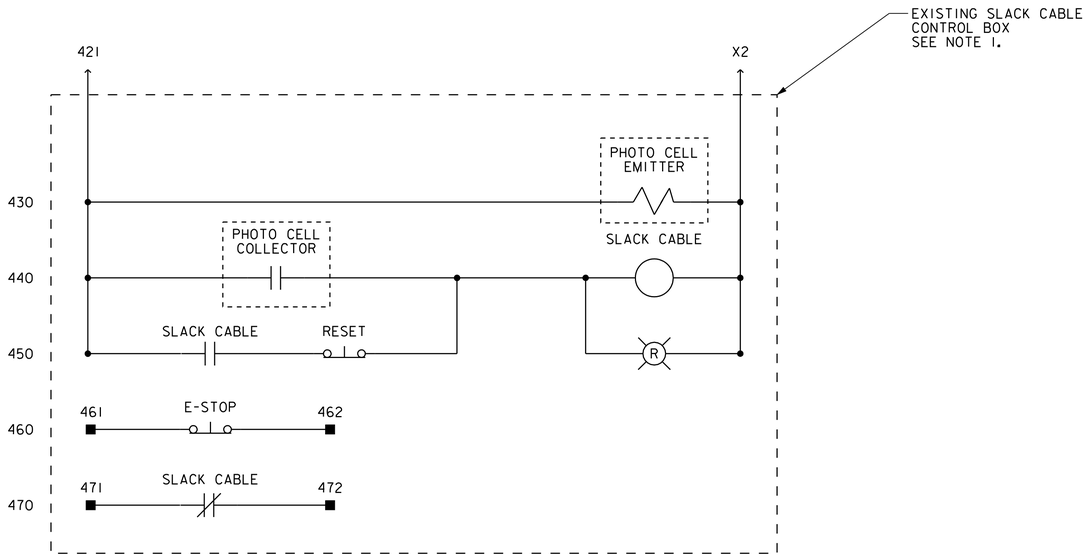

SLACK CABLE CONTROL ENCLOSURE DETAIL

(DOWNSTREAM AND MIDDLE LEAVES ONLY)

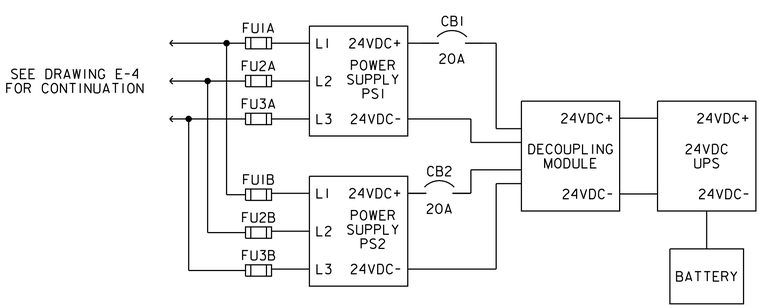

POWER SUPPLY BLOCK DIAGRAM

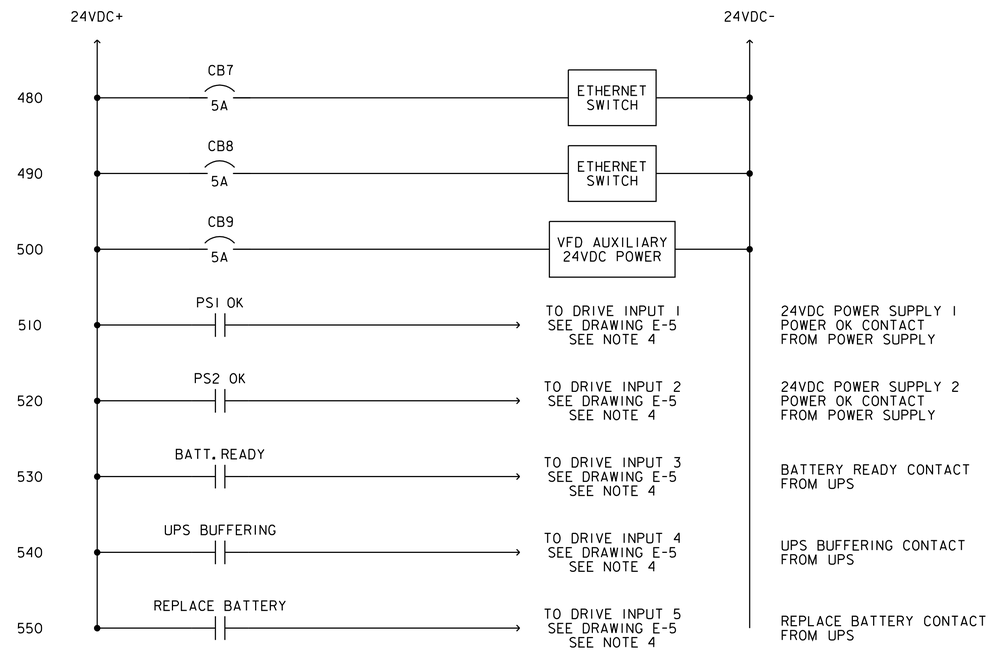

24VDC WIRING DIAGRAM

(PRIMARY SIDE OF RECTIFIER SHALL BE FUSED. FU5 & FU6 SHOWN ON DRAWING E-4)

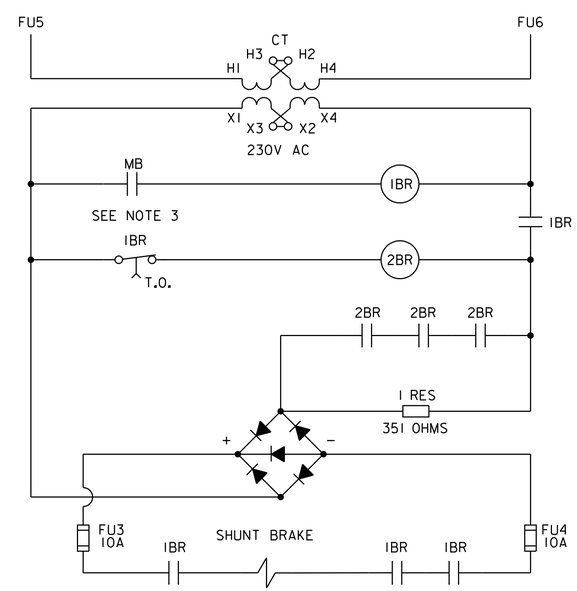

DC BRAKE RECTIFIER SCHEMATIC

SEE NOTE 2

NOTES:

1. THE EXISTING SLACK CABLE CONTROL ENCLOSURE IS SHOWN FOR INFORMATION ONLY. THE CONTRACTOR SHALL PROVIDE TERMINAL BLOCKS TO POWER THIS ENCLOSURE FROM THE VFD CONTROL TRANSFORMER.
2. RECTIFIER PROVIDED COMPLETE FROM CUTLER-HAMMER MODLE NO. GH515ED17-4.
3. CONNECTION SHALL BE MADE FROM CONTACT ON "BRAKE" CONTROL RELAY TO RECTIFIER CIRCUIT AS SHOWN.
4. CONTRACTOR SHALL PROVIDE RELAYS AS NECESSARY TO INTERFACE WITH DRIVE.

US Army Corps of Engineers
ST. LOUIS DISTRICT

Symbol	Description	Date	Appr.
	Revisions		

Designed by: BRANDON B. LEWIS
Drawn by: BBL
Ckd by: BMN
Reviewed by: SHANE M. NIELSIRK, P.E.
APPROVED: THOMAS J. QUIGLEY, P.E. Chief, Design Branch
Date: XXX
SUBMITTED: STEPHEN G. FARKAS, P.E. Chief, Struct/Arch/Mech/Elec Section
File name:
Plot date: XXXX

U.S. ARMY ENGINEER DISTRICT
CORPS OF ENGINEERS
ST. LOUIS, MISSOURI

UPPER MISSISSIPPI RIVER BASIN

MELVIN PRICE LOCKS AND DAM PROJECT

MELVIN PRICE LOCKS AND DAM
LIFT GATE DRIVES & MOTOR REPLACEMENT

ELECTRICAL EQUIPMENT SUPPLY CONTRACT
DOWNSTREAM LEAF SLAVE DRIVE
CONTROL SCHEMATICS
SHEET 3

M-MP-12/E-6

DRAWING NUMBER

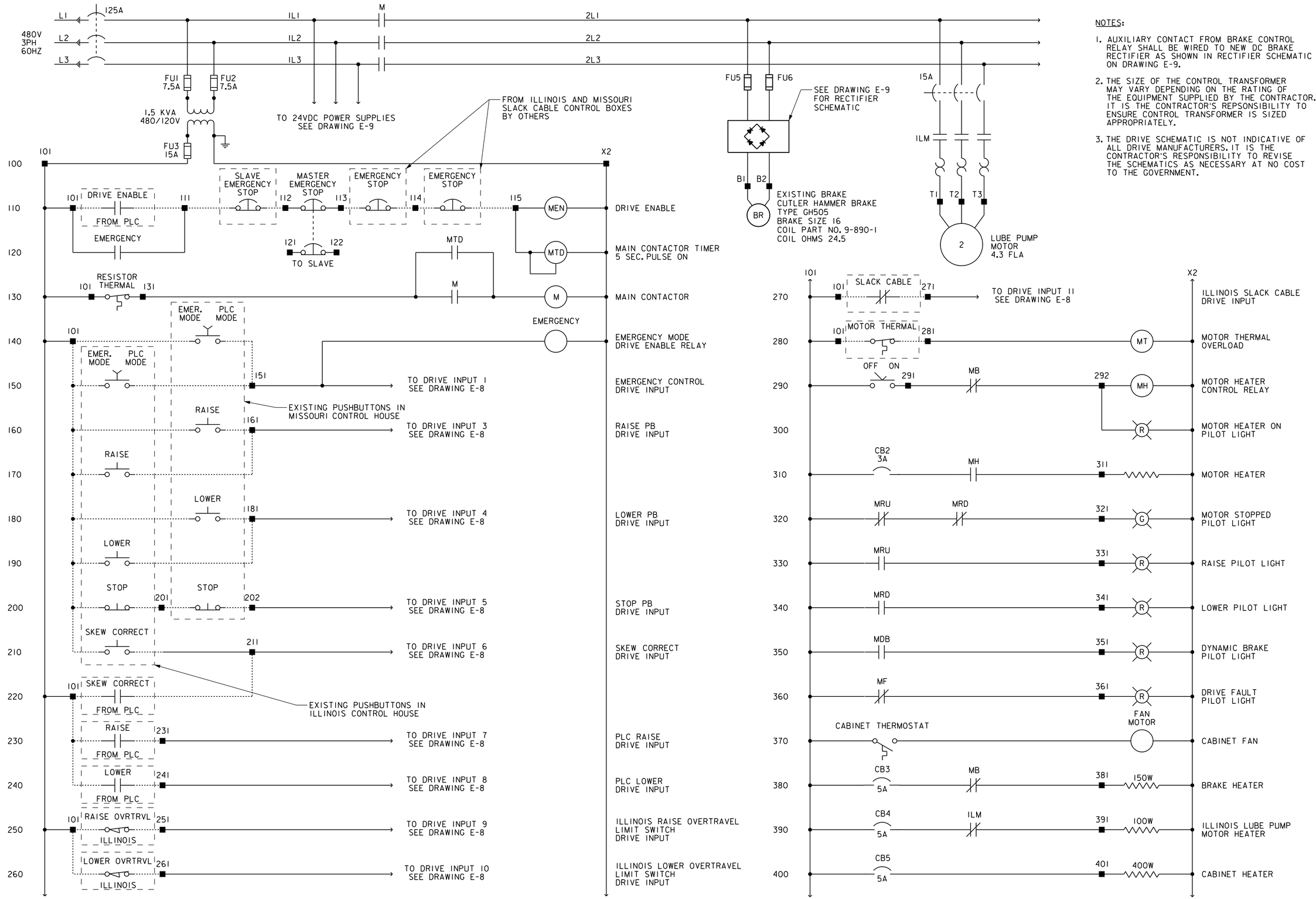

NOTES:

1. AUXILIARY CONTACT FROM BRAKE CONTROL RELAY SHALL BE WIRED TO NEW DC BRAKE RECTIFIER AS SHOWN IN RECTIFIER SCHEMATIC ON DRAWING E-9.
2. THE SIZE OF THE CONTROL TRANSFORMER MAY VARY DEPENDING ON THE RATING OF THE EQUIPMENT SUPPLIED BY THE CONTRACTOR. IT IS THE CONTRACTOR'S REPSONSIBILITY TO ENSURE CONTROL TRANSFORMER IS SIZED APPROPRIATELY.
3. THE DRIVE SCHEMATIC IS NOT INDICATIVE OF ALL DRIVE MANUFACTURERS. IT IS THE CONTRACTOR'S RESPONSIBILITY TO REVISE THE SCHEMATICS AS NECESSARY AT NO COST TO THE GOVERNMENT.

US Army Corps of Engineers
ST. LOUIS DISTRICT

Symbol	Description Revisions	Date	Appr.

Designed by: BRANDON B. LEWIS
Drawn by: BBL
Cxd by: SMW
Reviewed by: SHANE M. NIEUWKIRK, P.E.
APPROVED: THOMAS J. QUIGLEY, P.E. Chief, Design Branch
Date: XXX
SUBMITTED: STEPHEN G. FARKAS, P.E. Chief, Struct/Arch/Mech/Elec Section
File name:
Plot date: XXXX

U.S. ARMY ENGINEER DISTRICT CORPS OF ENGINEERS ST. LOUIS, MISSOURI

UPPER MISSISSIPPI RIVER BASIN

MELVIN PRICE LOCKS AND DAM PROJECT

MELVIN PRICE LOCKS AND DAM
LIFT GATE DRIVES & MOTOR REPLACEMENT

ELECTRICAL EQUIPMENT SUPPLY CONTRACT

MIDDLE LEAF MASTER DRIVE CONTROL SCHEMATICS SHEET 1

M-MP-12/E-7

DRAWING NUMBER

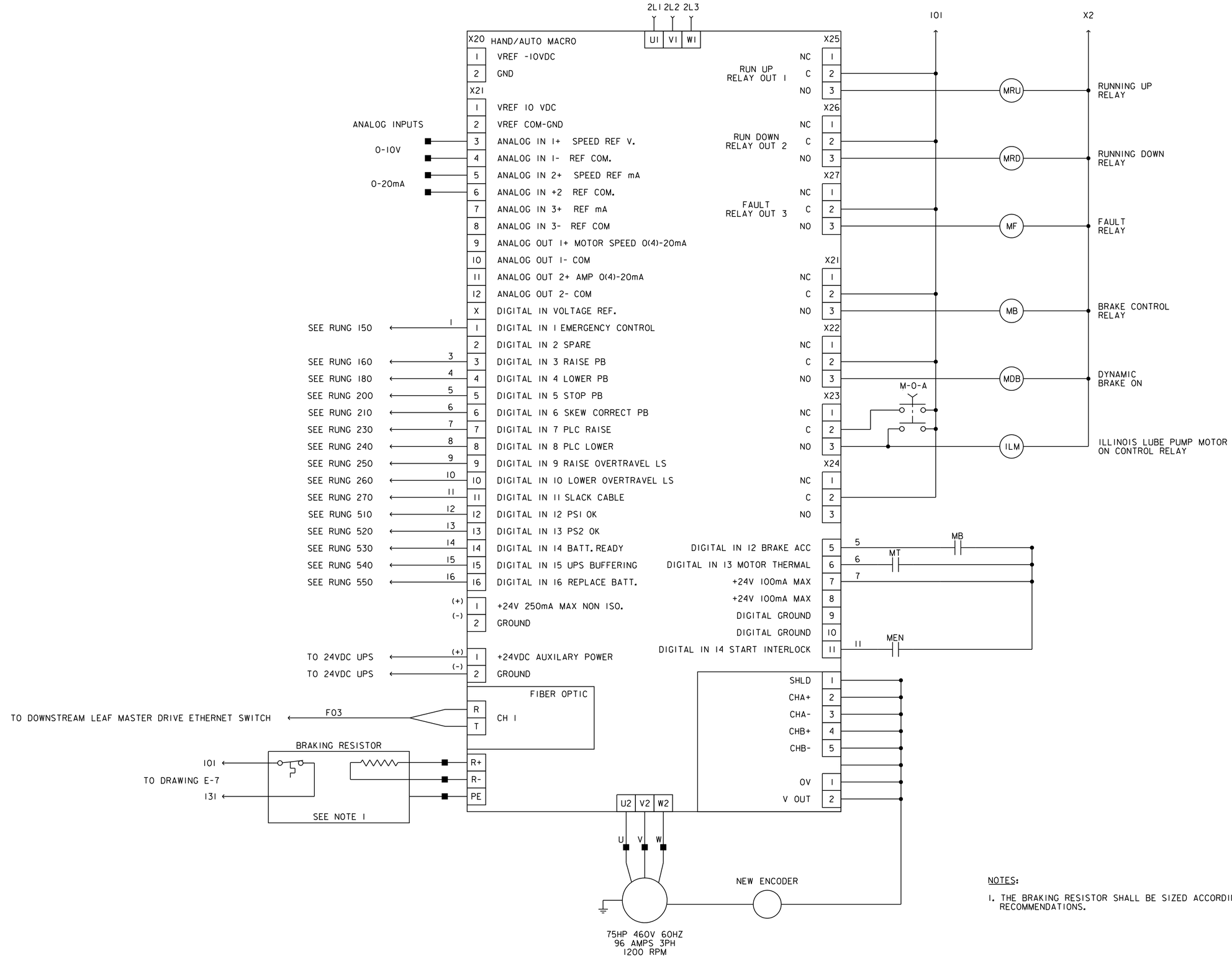

NOTES:

1. THE BRAKING RESISTOR SHALL BE SIZED ACCORDING TO THE MANUFACTURER'S RECOMMENDATIONS.

US Army Corps of Engineers
ST. LOUIS DISTRICT

Symbol	Description	Date	Appr.
	Revisions		

Designed by: BRANDON B. LEWIS
Drawn by: BBL
Chkd by: BWN
Reviewed by: SHANE M. NIELKIRK, P.E.
APPROVED: THOMAS J. QUIGLEY, P.E. Chief, Design Branch
Date: XXX
SUBMITTED: STEPHEN G. FARKAS, P.E. Chief, Struct/Arch/Mech/Elec Section
File name:
Plot date: XXXX

U.S. ARMY ENGINEER DISTRICT
CORPS OF ENGINEERS
ST. LOUIS, MISSOURI

UPPER MISSISSIPPI RIVER BASIN

MELVIN PRICE LOCKS AND DAM PROJECT

MELVIN PRICE LOCKS AND DAM
LIFT GATE DRIVES & MOTOR REPLACEMENT

ELECTRICAL EQUIPMENT SUPPLY CONTRACT

MIDDLE LEAF MASTER DRIVE
CONTROL SCHEMATICS
SHEET 2

M-MP-12/E-8

DRAWING NUMBER

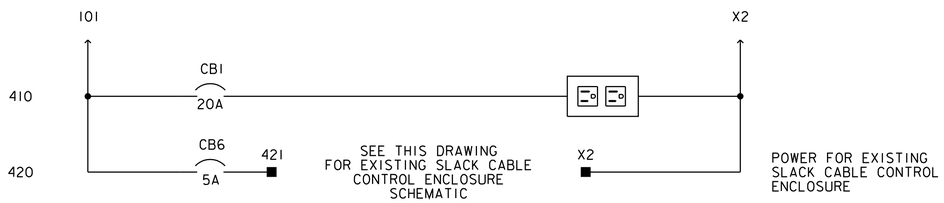

RECEPTACLE AND SLACK CABLE ENCLOSURE POWER WIRING

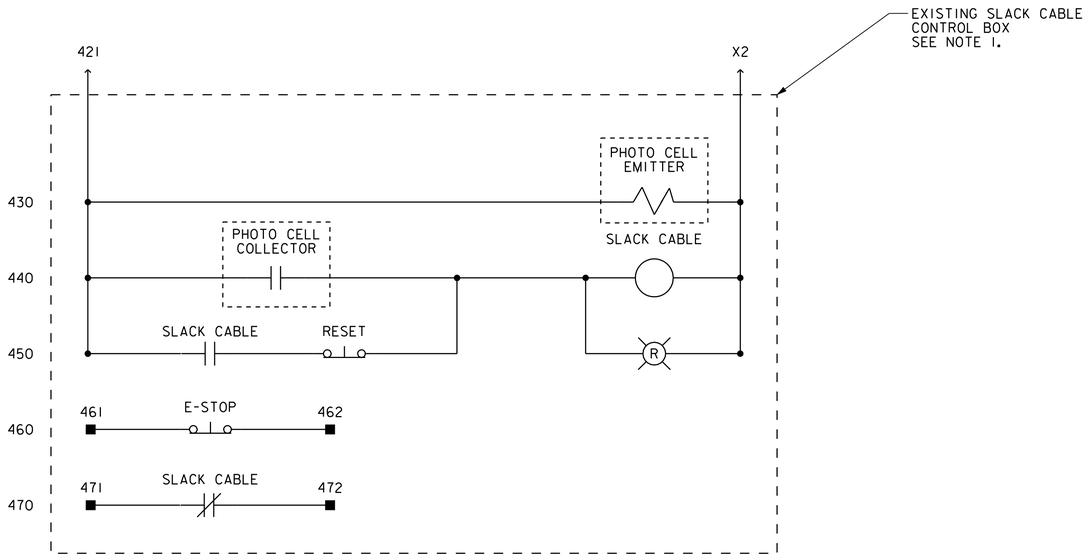

SLACK CABLE CONTROL ENCLOSURE DETAIL

(DOWNSTREAM AND MIDDLE LEAVES ONLY)

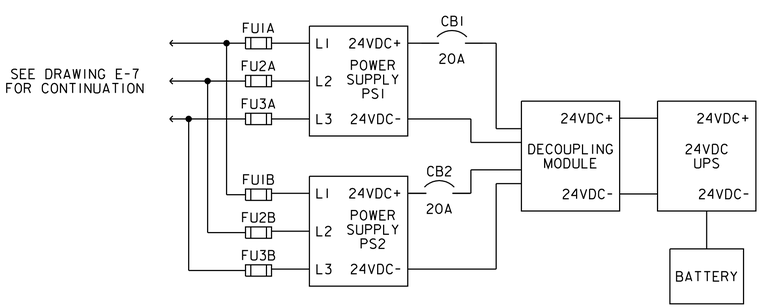

POWER SUPPLY BLOCK DIAGRAM

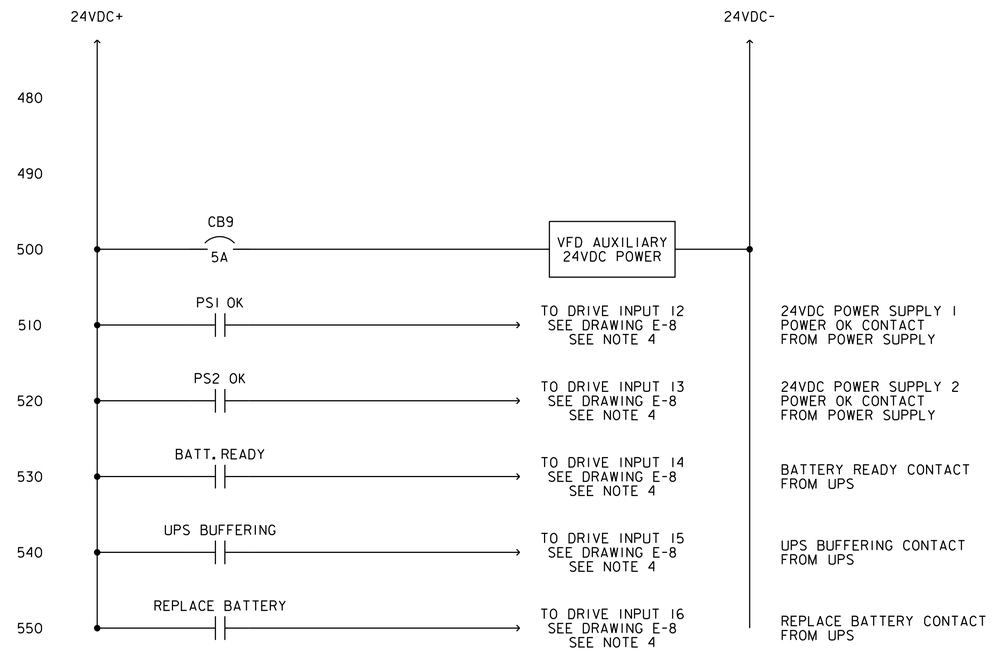

24VDC WIRING DIAGRAM

(PRIMARY SIDE OF RECTIFIER SHALL BE FUSED. FU5 & FU6 SHOWN ON DRAWING E-7)

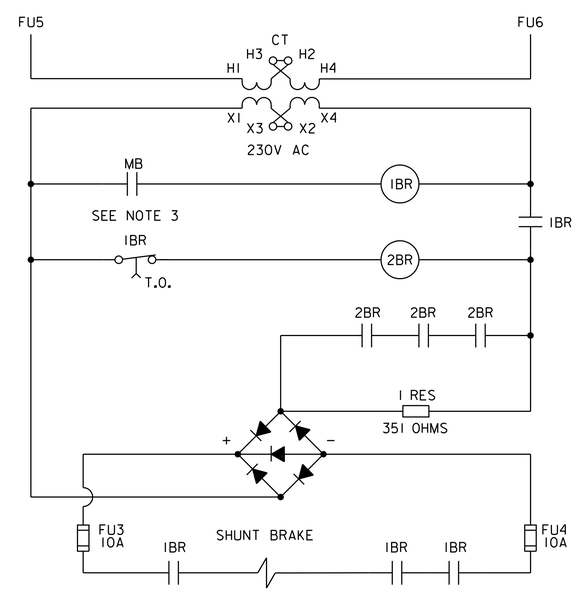

DC BRAKE RECTIFIER SCHEMATIC

SEE NOTE 2

NOTES:

1. THE EXISTING SLACK CABLE CONTROL ENCLOSURE IS SHOWN FOR INFORMATION ONLY. THE CONTRACTOR SHALL PROVIDE TERMINAL BLOCKS TO POWER THIS ENCLOSURE FROM THE VFD CONTROL TRANSFORMER.
2. RECTIFIER PROVIDED COMPLETE FROM CUTLER-HAMMER MODLE NO. GH515ED17-4.
3. CONNECTION SHALL BE MADE FROM CONTACT ON "BRAKE" CONTROL RELAY TO RECTIFIER CIRCUIT AS SHOWN.
4. CONTRACTOR SHALL PROVIDE RELAYS AS NECESSARY TO INTERFACE WITH DRIVE.

US Army Corps of Engineers
ST. LOUIS DISTRICT

Symbol	Description	Date	Appr.
	Revisions		

Designed by: BRANDON B. LEWIS
Drawn by: BBL
Ckd by: SWN
Reviewed by: SHANE M. NEUKIRK, P.E.
APPROVED: THOMAS J. QUIGLEY, P.E. Chief, Design Branch
Date: XXX
SUBMITTED: STEPHEN G. FARKAS, P.E. Chief, Struct/Arch/Mech/Elec Section
File name:
Plot date: XXXX

U.S. ARMY ENGINEER DISTRICT
CORPS OF ENGINEERS
ST. LOUIS, MISSOURI

UPPER MISSISSIPPI RIVER BASIN

MELVIN PRICE LOCKS AND DAM PROJECT

MELVIN PRICE LOCKS AND DAM
LIFT GATE DRIVES & MOTOR REPLACEMENT

ELECTRICAL EQUIPMENT SUPPLY CONTRACT

MIDDLE LEAF MASTER DRIVE
CONTROL SCHEMATICS
SHEET 3

M-MP-12/E-9

DRAWING NUMBER

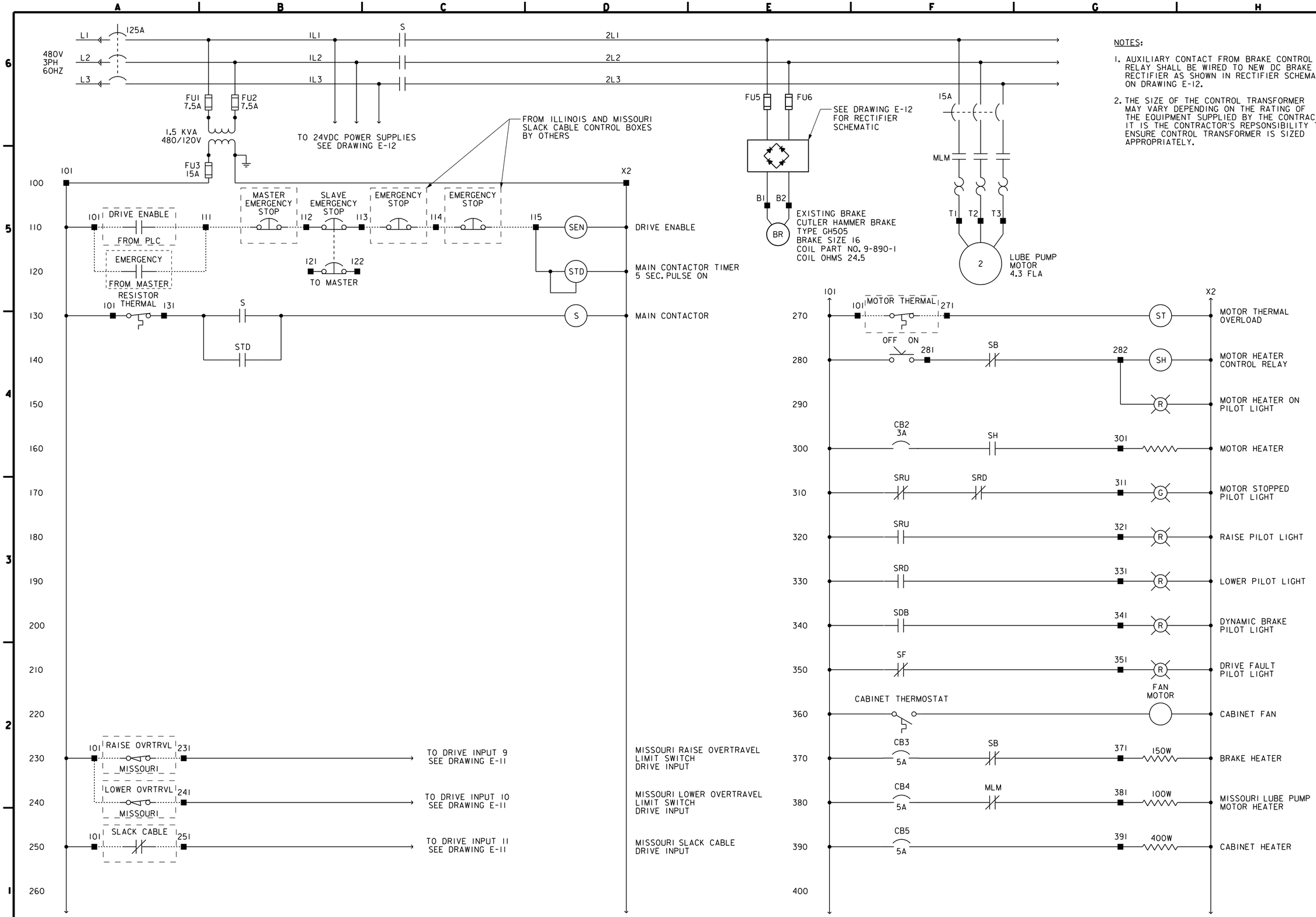

NOTES:

1. AUXILIARY CONTACT FROM BRAKE CONTROL RELAY SHALL BE WIRED TO NEW DC BRAKE RECTIFIER AS SHOWN IN RECTIFIER SCHEMATIC ON DRAWING E-12.
2. THE SIZE OF THE CONTROL TRANSFORMER MAY VARY DEPENDING ON THE RATING OF THE EQUIPMENT SUPPLIED BY THE CONTRACTOR. IT IS THE CONTRACTOR'S REPSONSIBILITY TO ENSURE CONTROL TRANSFORMER IS SIZED APPROPRIATELY.

US Army Corps of Engineers
ST. LOUIS DISTRICT

Symbol	Description Revisions	Date	Appr.

Designed by: BRANDON B. LEWIS
Drawn by: BBL
Ckd by: SAW
Reviewed by: SHANE M. NIEZWIRK, P.E.
APPROVED: THOMAS J. DUIGLEY, P.E. Chief, Design Branch
Date: XXX
SUBMITTED: STEPHEN G. FARKAS, P.E. Chief, Struct/Arch/Mech/Elec Section
File name:
Plot date: XXXX

U.S. ARMY ENGINEER DISTRICT
CORPS OF ENGINEERS
ST. LOUIS, MISSOURI

UPPER MISSISSIPPI RIVER BASIN

MELVIN PRICE LOCKS AND DAM PROJECT

MELVIN PRICE LOCKS AND DAM
LIFT GATE DRIVES & MOTOR REPLACEMENT

ELECTRICAL EQUIPMENT SUPPLY CONTRACT

MIDDLE LEAF SLAVE DRIVE
CONTROL SCHEMATICS
SHEET 1

M-MP-12/E-10

DRAWING NUMBER

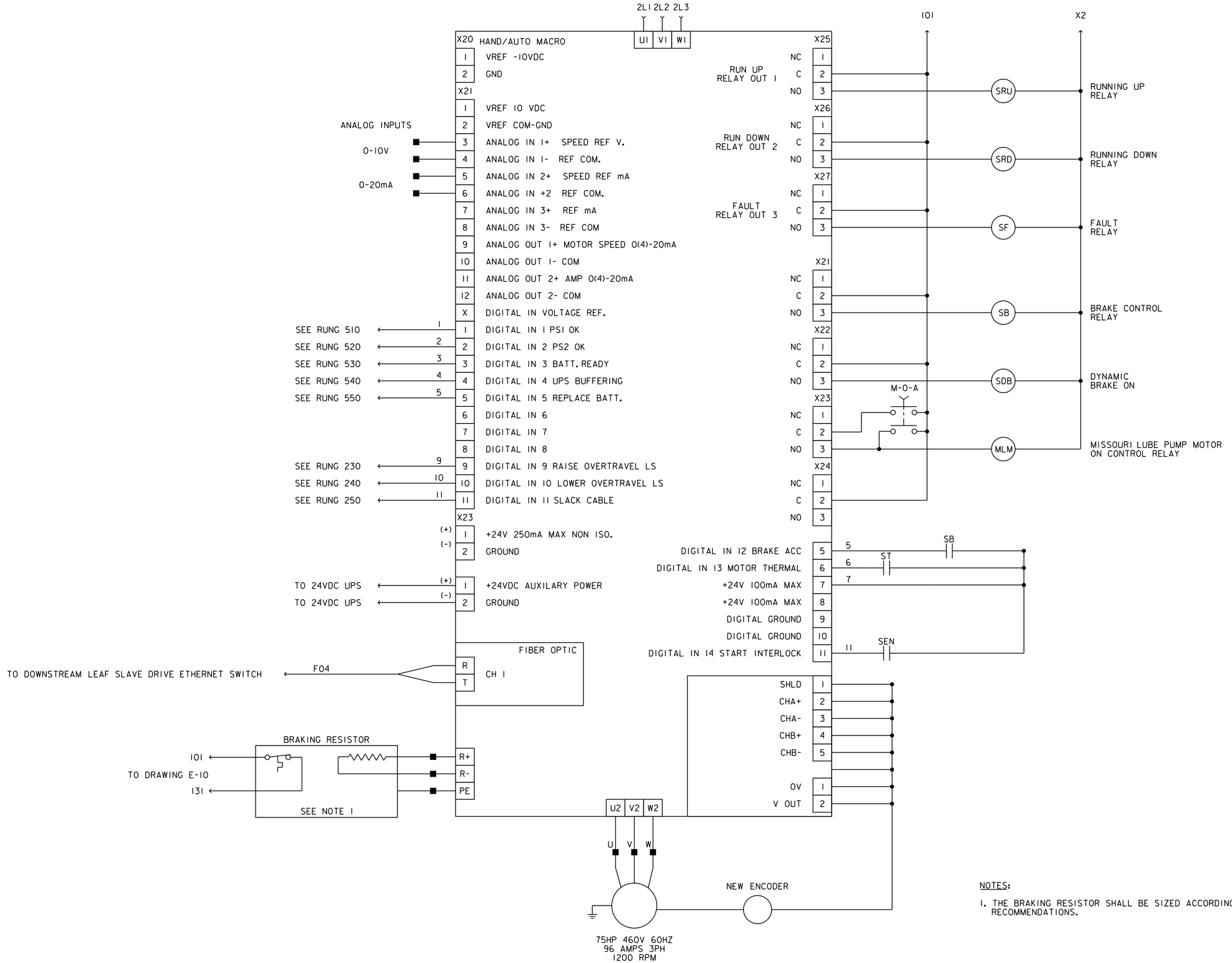

NOTES:

1. THE BRAKING RESISTOR SHALL BE SIZED ACCORDING TO THE MANUFACTURER'S RECOMMENDATIONS.

US Army Corps of Engineers
ST. LOUIS DISTRICT

Symbol	Description Revisions	Date	Appr.

Designed by: BRANDON B. LEWIS
Drawn by: BB
Ckd by: SMN
Reviewed by: SHANE M. NIELKIRK, P.E.
APPROVED: THOMAS J. QUIGLEY, P.E. Chief, Design Branch
Date: XXX
SUBMITTED: STEPHEN G. FARKAS, P.E. Chief, Struct/Arch/Mech/Elec Section
File name:
Plot date: XXXX

U.S. ARMY ENGINEER DISTRICT
CORPS OF ENGINEERS
ST. LOUIS, MISSOURI

UPPER MISSISSIPPI RIVER BASIN

MELVIN PRICE LOCKS AND DAM PROJECT

MELVIN PRICE LOCKS AND DAM
LIFT GATE DRIVES & MOTOR REPLACEMENT

ELECTRICAL EQUIPMENT SUPPLY CONTRACT

MIDDLE LEAF SLAVE DRIVE
CONTROL SCHEMATICS
SHEET 2

M-MP-12/E-11

DRAWING NUMBER

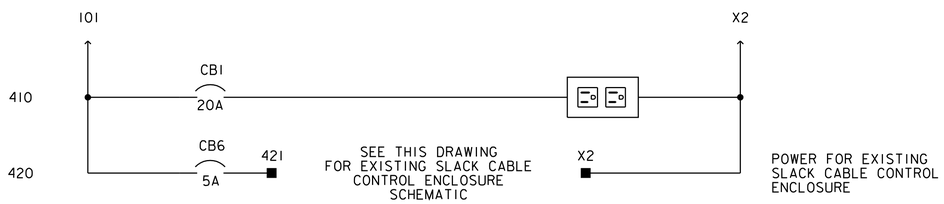

RECEPTACLE AND SLACK CABLE ENCLOSURE POWER WIRING

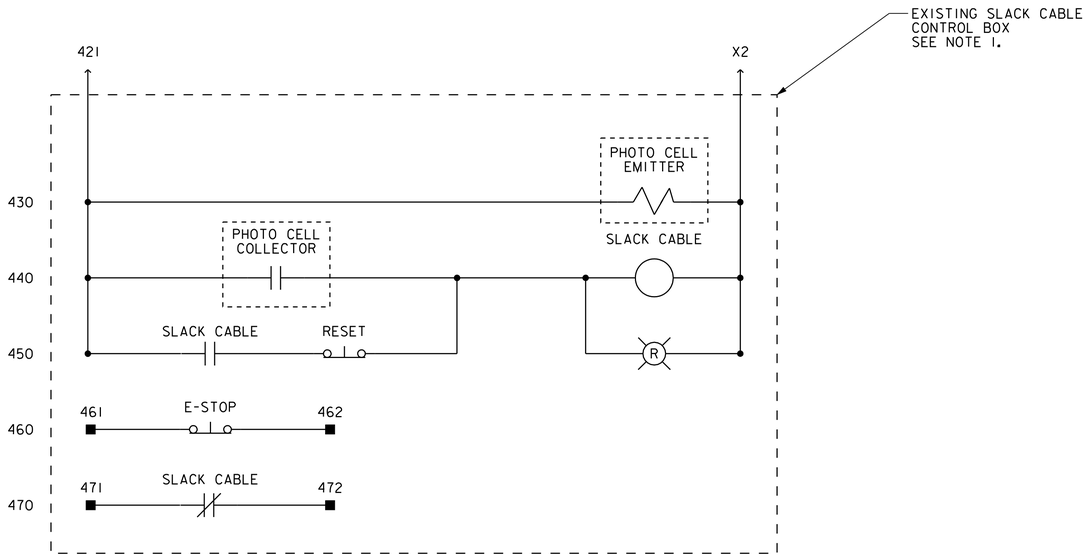

SLACK CABLE CONTROL ENCLOSURE DETAIL

(DOWNSTREAM AND MIDDLE LEAVES ONLY)

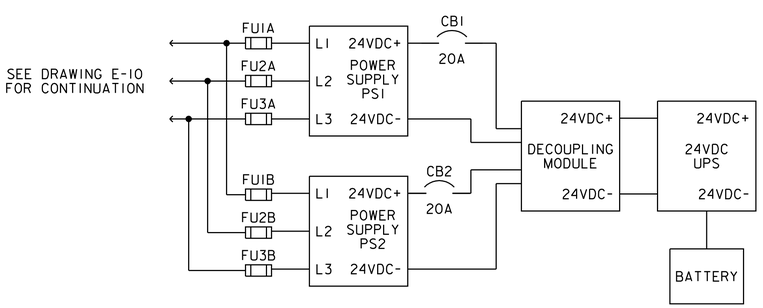

POWER SUPPLY BLOCK DIAGRAM

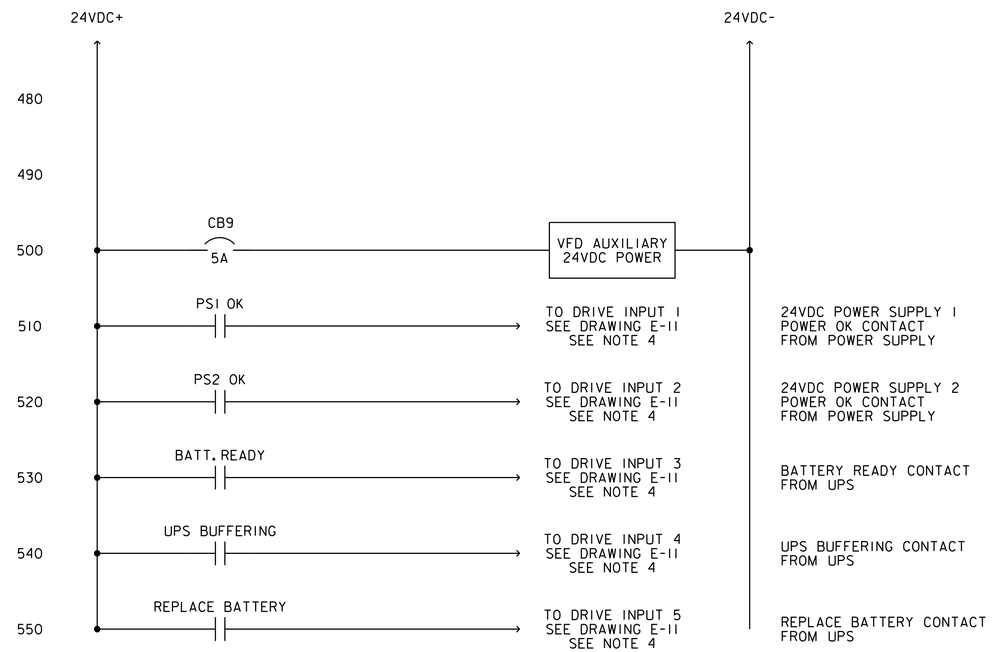

24VDC WIRING DIAGRAM

(PRIMARY SIDE OF RECTIFIER SHALL BE FUSED. FU5 & FU6 SHOWN ON DRAWING E-10)

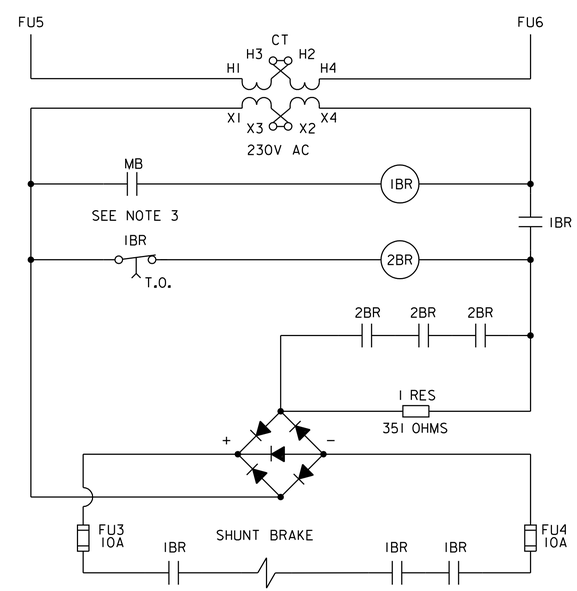

DC BRAKE RECTIFIER SCHEMATIC

SEE NOTE 2

NOTES:

1. THE EXISTING SLACK CABLE CONTROL ENCLOSURE IS SHOWN FOR INFORMATION ONLY. THE CONTRACTOR SHALL PROVIDE TERMINAL BLOCKS TO POWER THIS ENCLOSURE FROM THE VFD CONTROL TRANSFORMER.
2. RECTIFIER PROVIDED COMPLETE FROM CUTLER-HAMMER MODLE NO. GH515ED17-4.
3. CONNECTION SHALL BE MADE FROM CONTACT ON "BRAKE" CONTROL RELAY TO RECTIFIER CIRCUIT AS SHOWN.
4. CONTRACTOR SHALL PROVIDE RELAYS AS NECESSARY TO INTERFACE WITH DRIVE.

US Army Corps of Engineers
ST. LOUIS DISTRICT

Symbol	Description	Date	Appr.
	Revisions		

Designed by: BRANDON B. LEWIS
Drawn by: BBL
Ckd by: SWN
Reviewed by: SHANE M. NIELSIRK, P.E.
APPROVED: THOMAS J. QUIGLEY, P.E. Chief, Design Branch
SUBMITTED: STEPHEN G. FARKAS, P.E. Chief, Struct/Arch/Mech/Elec Section
Date: XXX
File name:
Plot date: XXXX

U.S. ARMY ENGINEER DISTRICT
CORPS OF ENGINEERS
ST. LOUIS, MISSOURI

UPPER MISSISSIPPI RIVER BASIN

MELVIN PRICE LOCKS AND DAM PROJECT

MELVIN PRICE LOCKS AND DAM
LIFT GATE DRIVES & MOTOR REPLACEMENT

ELECTRICAL EQUIPMENT SUPPLY CONTRACT

MIDDLE LEAF SLAVE DRIVE
CONTROL SCHEMATICS
SHEET 3

M-MP-12/E-12

DRAWING NUMBER

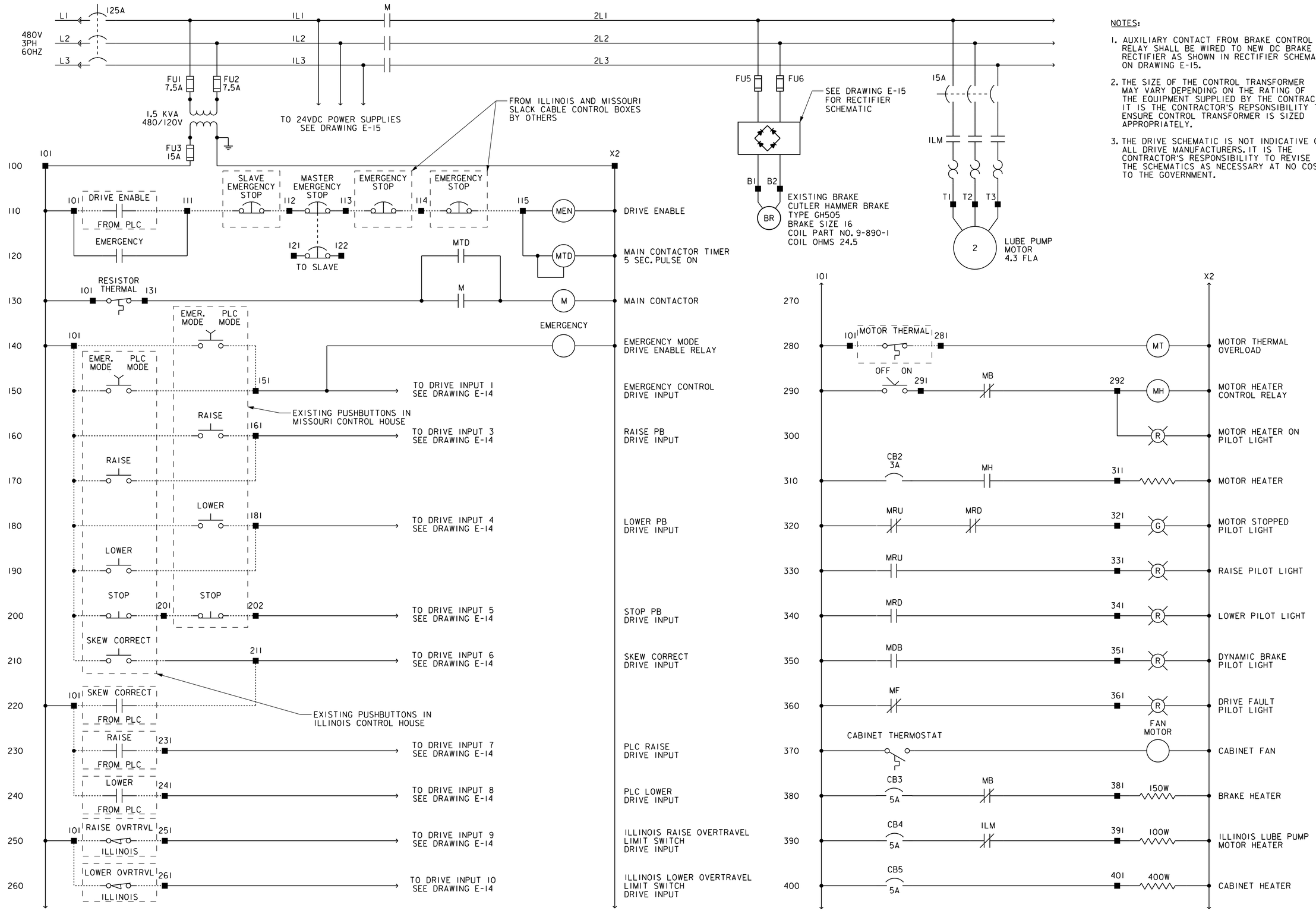

NOTES:

1. AUXILIARY CONTACT FROM BRAKE CONTROL RELAY SHALL BE WIRED TO NEW DC BRAKE RECTIFIER AS SHOWN IN RECTIFIER SCHEMATIC ON DRAWING E-15.
2. THE SIZE OF THE CONTROL TRANSFORMER MAY VARY DEPENDING ON THE RATING OF THE EQUIPMENT SUPPLIED BY THE CONTRACTOR. IT IS THE CONTRACTOR'S REPSONSIBILITY TO ENSURE CONTROL TRANSFORMER IS SIZED APPROPRIATELY.
3. THE DRIVE SCHEMATIC IS NOT INDICATIVE OF ALL DRIVE MANUFACTURERS. IT IS THE CONTRACTOR'S RESPONSIBILITY TO REVISE THE SCHEMATICS AS NECESSARY AT NO COST TO THE GOVERNMENT.

US Army Corps of Engineers
ST. LOUIS DISTRICT

Symbol	Description	Date	Appr.
	Revisions		

Designed by: BRANDON B. LEWIS
Drawn by: BBL
Cxd by: SMW
Reviewed by: SHANE M. NIEUWKIRK, P.E.
APPROVED: THOMAS J. QUIGLEY, P.E. Chief, Design Branch
Date: XXX
SUBMITTED: STEPHEN G. FARKAS, P.E. Chief, Struct/Arch/Mech/Elec Section
File name:
Plot date: XXXX

U.S. ARMY ENGINEER DISTRICT CORPS OF ENGINEERS ST. LOUIS, MISSOURI

UPPER MISSISSIPPI RIVER BASIN

MELVIN PRICE LOCKS AND DAM PROJECT

MELVIN PRICE LOCKS AND DAM
LIFT GATE DRIVES & MOTOR REPLACEMENT

ELECTRICAL EQUIPMENT SUPPLY CONTRACT

UPSTREAM LEAF MASTER DRIVE CONTROL SCHEMATICS SHEET 1

M-MP-12/E-13

DRAWING NUMBER

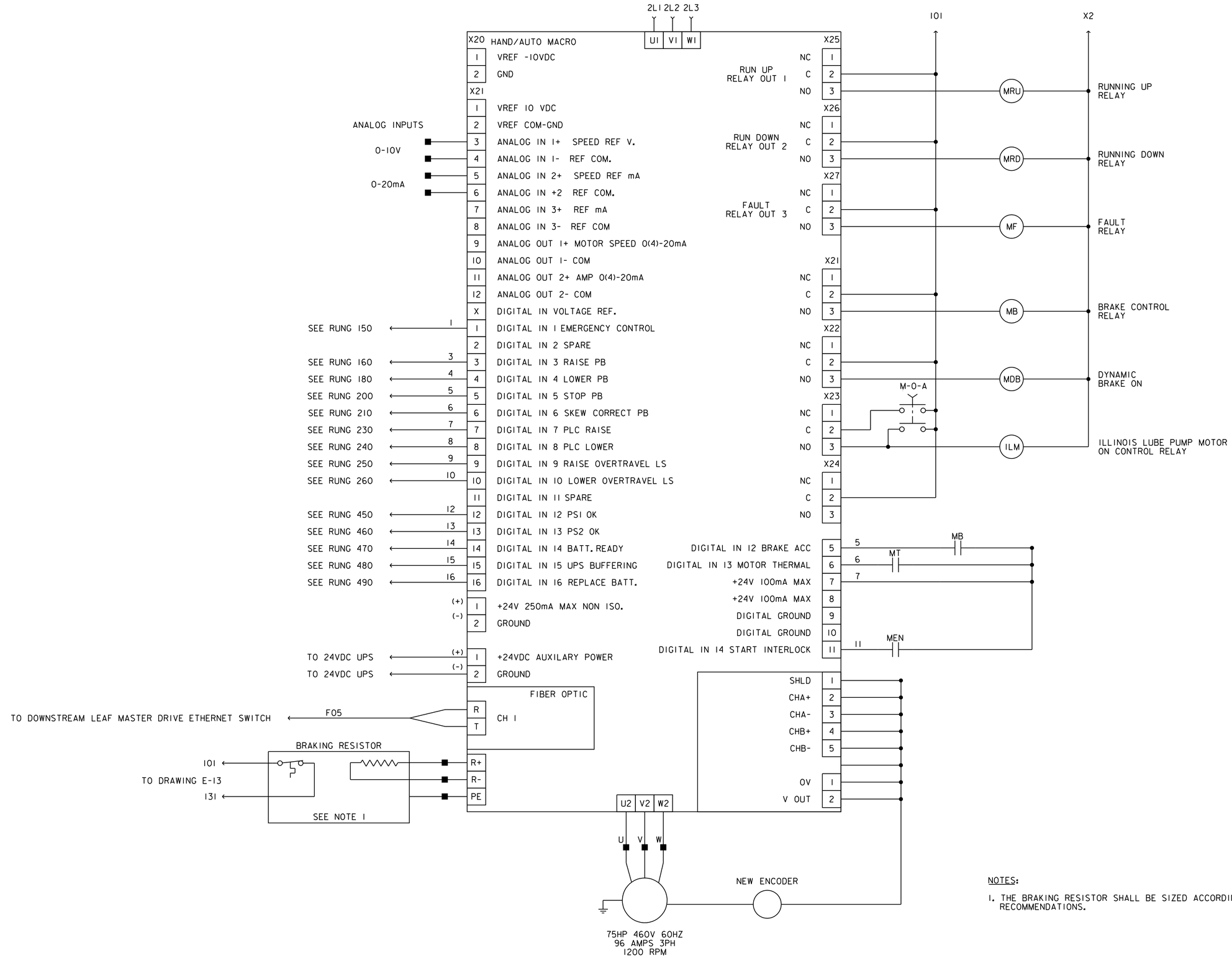

NOTES:

1. THE BRAKING RESISTOR SHALL BE SIZED ACCORDING TO THE MANUFACTURER'S RECOMMENDATIONS.

US Army Corps of Engineers
ST. LOUIS DISTRICT

Symbol	Description	Date	Appr.
	Revisions		

Designed by: BRANDON B. LEWIS
Drawn by: BBL
Ckd by: BWN
Reviewed by: SHANE M. NIELKIRK, P.E.
APPROVED: THOMAS J. QUIGLEY, P.E. Chief, Design Branch
Date: XXX
SUBMITTED: STEPHEN G. FARKAS, P.E. Chief, Struct/Arch/Mech/Elec Section
File name:
Plot date: XXXX

U.S. ARMY ENGINEER DISTRICT
CORPS OF ENGINEERS
ST. LOUIS, MISSOURI

UPPER MISSISSIPPI RIVER BASIN

MELVIN PRICE LOCKS AND DAM PROJECT

MELVIN PRICE LOCKS AND DAM
LIFT GATE DRIVES & MOTOR REPLACEMENT

ELECTRICAL EQUIPMENT SUPPLY CONTRACT

UPSTREAM LEAF MASTER DRIVE
CONTROL SCHEMATICS
SHEET 2

M-MP-12/E-14

DRAWING NUMBER

RECEPTACLE AND SLACK CABLE ENCLOSURE POWER WIRING

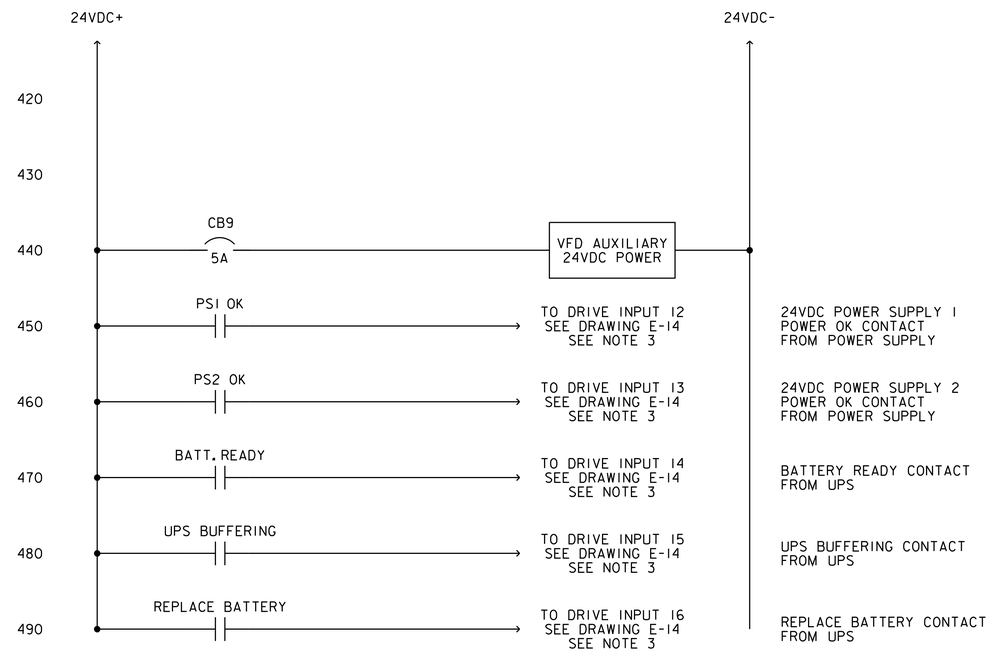

24VDC WIRING DIAGRAM

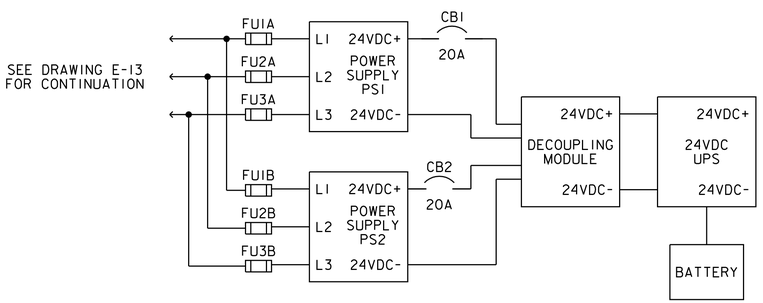

POWER SUPPLY BLOCK DIAGRAM

(PRIMARY SIDE OF RECTIFIER SHALL BE FUSED. FU5 & FU6 SHOWN ON DRAWING E-13)

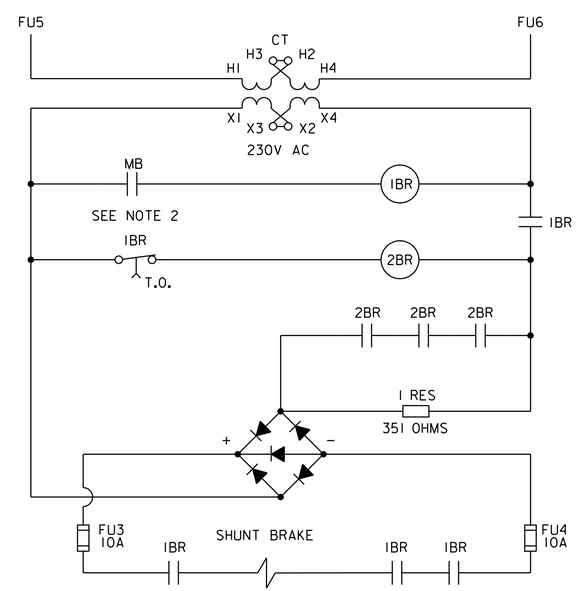

DC BRAKE RECTIFIER SCHEMATIC

SEE NOTE 1

NOTES:

1. RECTIFIER PROVIDED COMPLETE FROM CUTLER-HAMMER MODLE NO. GH515ED17-4.
2. CONNECTION SHALL BE MADE FROM CONTACT ON "BRAKE" CONTROL RELAY TO RECTIFIER CIRCUIT AS SHOWN.
3. CONTRACTOR SHALL PROVIDE RELAYS AS NECESSARY TO INTERFACE WITH DRIVE.

US Army Corps of Engineers
ST. LOUIS DISTRICT

Symbol	Description	Date	Appr.
	Revisions		

Designed by: BRANDON B. LEWIS
Drawn by: BBL
Cad by: BMN
Reviewed by: SHANE M. NIELSIRK, P.E.
APPROVED: THOMAS J. QUIGLEY, P.E. Chief, Design Branch
SUBMITTED: STEPHEN G. FARKAS, P.E. Chief, Struct/Arch/Mech/Elec Section
Date: XXX
File name:
Plot date: XXXX

U.S. ARMY ENGINEER DISTRICT
CORPS OF ENGINEERS
ST. LOUIS, MISSOURI

UPPER MISSISSIPPI RIVER BASIN

MELVIN PRICE LOCKS AND DAM PROJECT

MELVIN PRICE LOCKS AND DAM
LIFT GATE DRIVES & MOTOR REPLACEMENT

ELECTRICAL EQUIPMENT SUPPLY CONTRACT

UPSTREAM LEAF MASTER DRIVE
CONTROL SCHEMATICS
SHEET 3

M-MP-12/E-15

DRAWING NUMBER

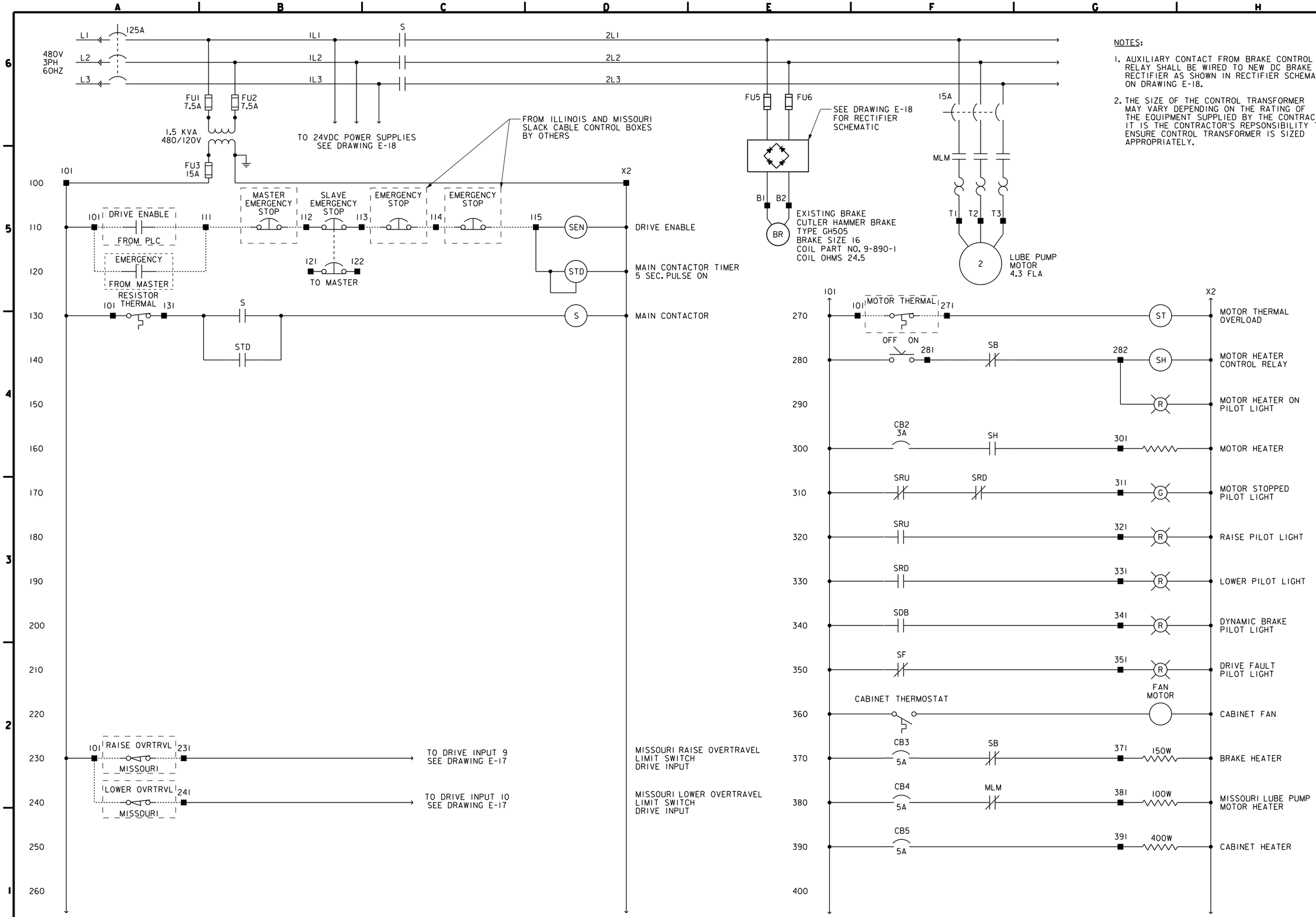

NOTES:

1. AUXILIARY CONTACT FROM BRAKE CONTROL RELAY SHALL BE WIRED TO NEW DC BRAKE RECTIFIER AS SHOWN IN RECTIFIER SCHEMATIC ON DRAWING E-18.
2. THE SIZE OF THE CONTROL TRANSFORMER MAY VARY DEPENDING ON THE RATING OF THE EQUIPMENT SUPPLIED BY THE CONTRACTOR. IT IS THE CONTRACTOR'S REPSONSIBILITY TO ENSURE CONTROL TRANSFORMER IS SIZED APPROPRIATELY.

US Army Corps of Engineers
ST. LOUIS DISTRICT

Symbol	Description	Date	Appr.
	Revisions		

Designed by: BRANDON B. LEWIS
Drawn by: BBL
Ckd by: SAW
Reviewed by: SHANE M. NIEZWIRK, P.E.
APPROVED: THOMAS J. DUIGLEY, P.E. Chief, Design Branch
Dates: XXX
SUBMITTED: STEPHEN G. FARKAS, P.E. Chief, Struct/Arch/Mech/Elec Section
File name:
Plot date: XXXX

U.S. ARMY ENGINEER DISTRICT
CORPS OF ENGINEERS
ST. LOUIS, MISSOURI

UPPER MISSISSIPPI RIVER BASIN

MELVIN PRICE LOCKS AND DAM PROJECT

MELVIN PRICE LOCKS AND DAM
LIFT GATE DRIVES & MOTOR REPLACEMENT

ELECTRICAL EQUIPMENT SUPPLY CONTRACT

UPSTREAM LEAF SLAVE DRIVE
CONTROL SCHEMATICS
SHEET 1

M-MP-12/E-16

DRAWING NUMBER

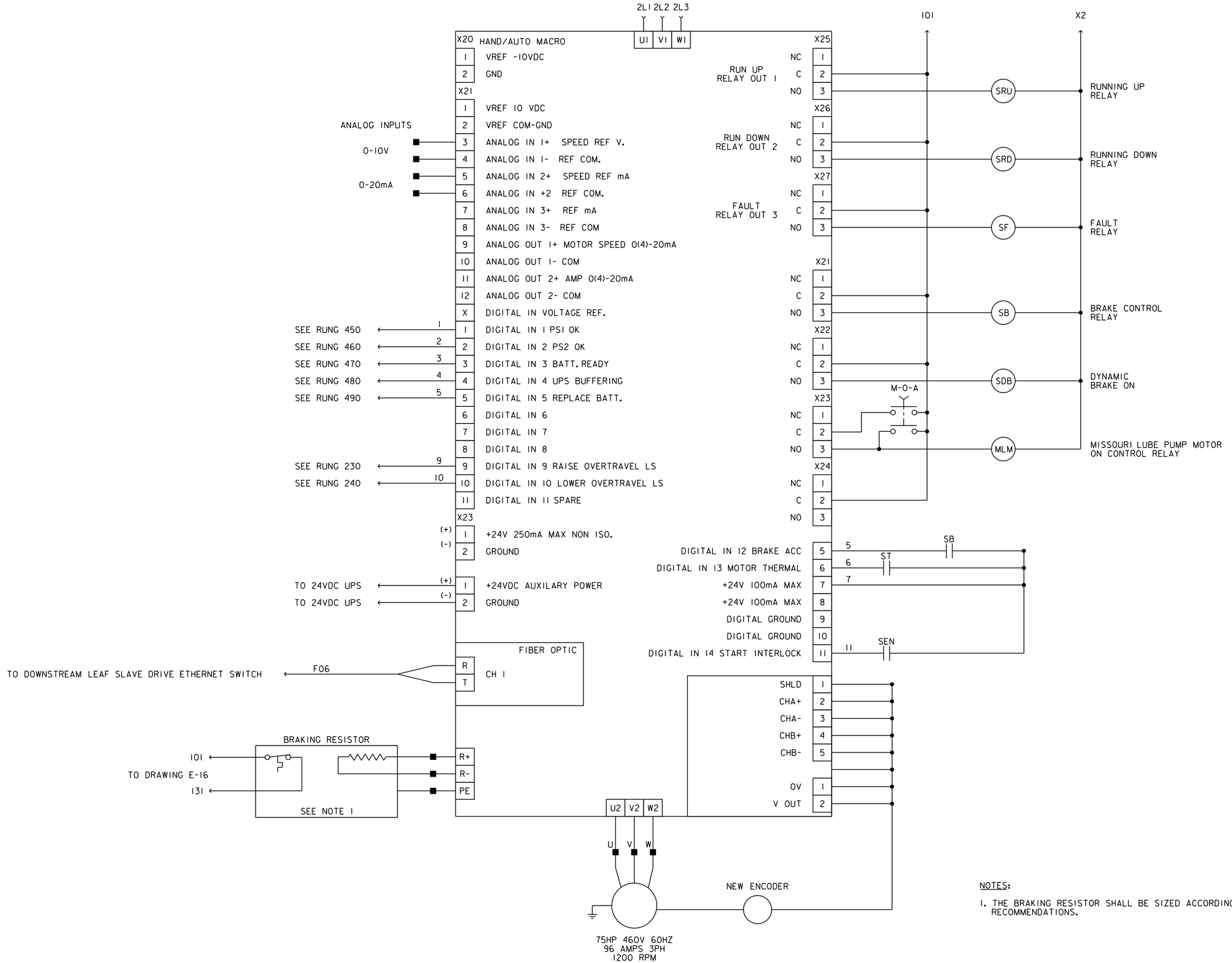

NOTES:

1. THE BRAKING RESISTOR SHALL BE SIZED ACCORDING TO THE MANUFACTURER'S RECOMMENDATIONS.

US Army Corps of Engineers
ST. LOUIS DISTRICT

Symbol	Description	Date	Appr.
	Revisions		

Designed by: BRANDON B. LEWIS
Drawn by: BB
Ckd by: SMN
Reviewed by: SHANE M. NIELKIRK, P.E.
APPROVED: THOMAS J. QUIGLEY, P.E. Chief, Design Branch
Date: XXX
SUBMITTED: STEPHEN G. FARKAS, P.E. Chief, Struct/Arch/Mech/Elec Section
File name:
Plot date: XXXX

U.S. ARMY ENGINEER DISTRICT
CORPS OF ENGINEERS
ST. LOUIS, MISSOURI

UPPER MISSISSIPPI RIVER BASIN

MELVIN PRICE LOCKS AND DAM PROJECT

MELVIN PRICE LOCKS AND DAM
LIFT GATE DRIVES & MOTOR REPLACEMENT

ELECTRICAL EQUIPMENT SUPPLY CONTRACT

UPSTREAM LEAF SLAVE DRIVE
CONTROL SCHEMATICS
SHEET 2

M-MP-12/E-17

DRAWING NUMBER

RECEPTACLE AND SLACK CABLE ENCLOSURE POWER WIRING

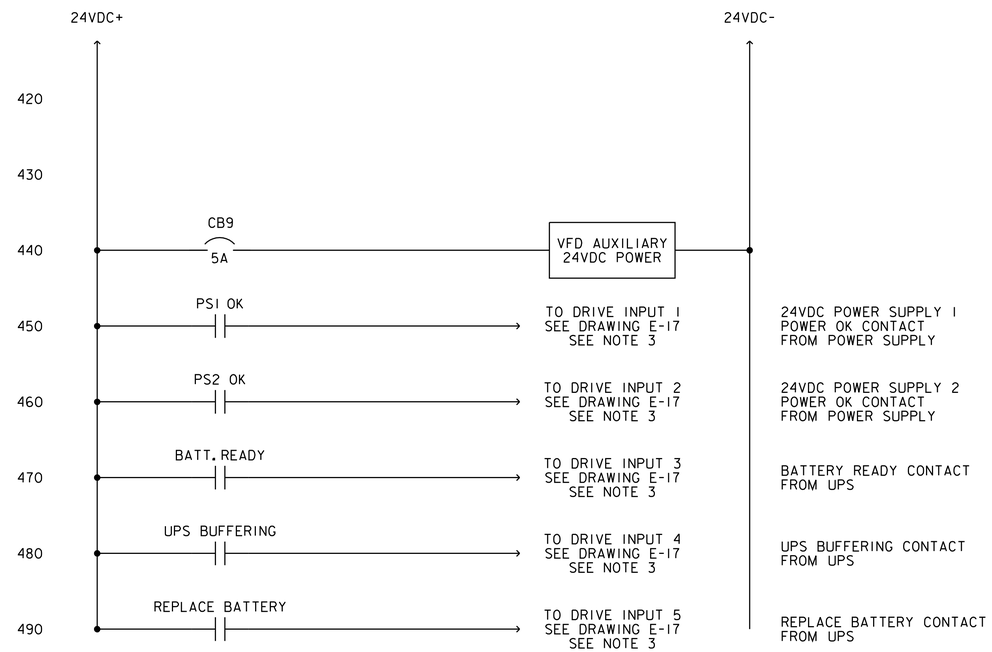

24VDC WIRING DIAGRAM

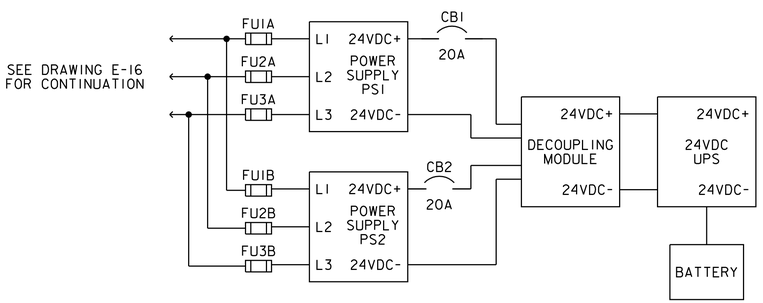

POWER SUPPLY BLOCK DIAGRAM

(PRIMARY SIDE OF RECTIFIER SHALL BE FUSED. FU5 & FU6 SHOWN ON DRAWING E-16)

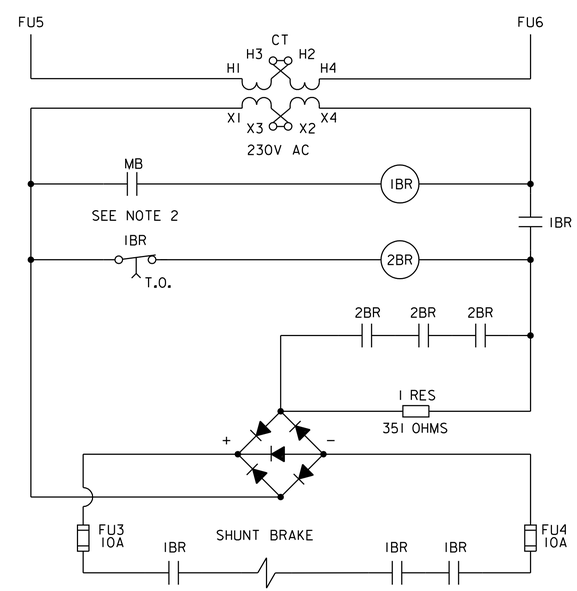

DC BRAKE RECTIFIER SCHEMATIC

SEE NOTE 1

NOTES:

1. RECTIFIER PROVIDED COMPLETE FROM CUTLER-HAMMER MODLE NO. GH515ED17-4.
2. CONNECTION SHALL BE MADE FROM CONTACT ON "BRAKE" CONTROL RELAY TO RECTIFIER CIRCUIT AS SHOWN.
3. CONTRACTOR SHALL PROVIDE RELAYS AS NECESSARY TO INTERFACE WITH DRIVE.

US Army Corps of Engineers
ST. LOUIS DISTRICT

Symbol	Description	Date	Appr.
	Revisions		

Designed by: BRANDON B. LEWIS
Drawn by: BBL
Cad by: SMN
Reviewed by: SHANE M. NIELSKIRK, P.E.
APPROVED: THOMAS J. QUIGLEY, P.E. Chief, Design Branch
Date: XXX
SUBMITTED: STEPHEN G. FARKAS, P.E. Chief, Struct/Arch/Mech/Elec Section
File name:
Plot date: XXXX

U.S. ARMY ENGINEER DISTRICT
CORPS OF ENGINEERS
ST. LOUIS, MISSOURI

UPPER MISSISSIPPI RIVER BASIN

MELVIN PRICE LOCKS AND DAM PROJECT

MELVIN PRICE LOCKS AND DAM
LIFT GATE DRIVES & MOTOR REPLACEMENT

ELECTRICAL EQUIPMENT SUPPLY CONTRACT

UPSTREAM SLAVE MASTER DRIVE
CONTROL SCHEMATICS
SHEET 3

M-MP-12/E-18

DRAWING NUMBER