Public Notice

US ARMY CORPS
OF ENGINEERS
St. Louis District
Gateway to Excellence

Reply To:
U.S. Army Corps of Engineers
Attn: CEMVS-OD-F
1222 Spruce Street
St. Louis, Missouri 63103-2833

Public Notice No.
P-2652
Public Notice Date
October 31, 2007
Expiration Date
November 21, 2007

Postmaster Please Post Conspicuously Until:

Regulatory Branch
Mississippi River (P-2652)
File Number: MVS-2002-08220

Interested parties are hereby notified that an application has been received for a Department of the Army permit for certain work in waters of the United States, as described below and shown on the attached maps.

COMMENTS AND ADDITIONAL INFORMATION: Comments on the described work should reference the U.S. Army Corps of Engineers File Number shown above and must reach this office no later than the above expiration date of the Public Notice to become part of the record and be considered in the decision. Comments should be mailed to the following address:

U.S. Army Corps of Engineers
(Regulatory Branch)
1222 Spruce Street
St. Louis, Missouri 63103-2833
ATTN: Linda Werdebaugh

APPLICANT: Allan Josesph Marine, LLC, RR#1 Box 43Z, Golden Eagle, Illinois 62036. (610-883-2800).
Agent: Mr. Charles A Lanczkowski, RR#1 Box 302, Golden Eagle, Illinois 62036 (314-610-9828).

LOCATION: The project is located on the left descending bank of Mississippi River mile 229.5, in Sections 1 & 6, Township 14 South, Range 1 and 2 West, near Fruitland Landing, Calhoun County, Illinois. (See Attached Location Maps).

PROJECT DESCRIPTION: The applicant requests permission to construct Winneberg Marina. The Winneberg Marina project consists of a rock jetty and a floating breakwater enclosing 174 floating boat slips, a main dock with ship's store, covered and uncovered dry storage, parking facilities, restroom facilities, and three boat ramps. All of the marina structures will be constructed within the 300 foot jetty and the 1800 feet floating breakwater. The jetty will extend approximately 300 feet from the bank of the river perpendicular to the bank, curving 15 degrees downstream, and will be 34 feet in height (18 feet exposed at pool). The jetty will be 100 feet wide at the bottom and 10 feet wide at the top, consisting of a total volume of 20,777 cubic yards of rock. The floating breakwater extends off of the jetty, running parallel to the river bank. The ship's store will be constructed on a floating dock at the east end of the marina. The three boat ramps will be 12 feet in width, and will extend 15-20 feet into the river, with a pier at each one, that will serve as a tie-off area for boats and the pier will extend 20 feet into the river. The store will be a 2,000 square foot footprint that will include gasoline

and diesel fuel sales. All fuel storage will be above ground. The dredging that will occur will be completed by both a hydraulic dredge and a mechanical dredge. All material will be placed in the settling pond that is located on the west end of the quarry. The discharge from the hydraulic dredge will be pumped directly into the settling pond, located in the quarry. Initial dredging will be in an area approximately 250 feet by 1500 feet. Based on pool conditions, an additional 2 – 4 feet of additional material will need to be dredged in the area, yielding a total of 45,000 (approx.) cubic yards of dredge material. Maintenance dredging is anticipated, and all of the material will be disposed of in the settling pond. The settling pond will allow for the settling of more than 500,000 cubic yards of effluent. Once the material is settled, any water that hasn't evaporated out will be pumped back into the river by pump, or by gravity flow. (See attached diagrams).
Attached is also the preliminary results from the initial project review by the U.S. Army Corps of Engineers Applied River Engineering Center, with regard to the sedimentation impacts the marina may have on the surrounding area, i.e., the Golden Eagle Ferry.

ADDITIONAL INFORMATION: Additional information may be obtained by contacting Linda Werdebaugh, Rivers Project Manager, U.S. Army Corps of Engineers at (314) 331-8632. Inquiries may also be sent by electronic facsimile to (314) 331-8741 or at electronic mail address: *Linda.C.Werdebaugh@mvs02.usace.army.mil*.

AUTHORITY: This permit will be processed under the provisions of Section 10 of the Rivers and Harbors Act of 1899 (33 U.S.C. 403) and Section 404 of the Clean Water Act (33 U.S.C. 1344).

WATER QUALITY CERTIFICATION: This public notice also provides documentation to the Illinois Environmental Protection Agency (IEPA) for water quality certification, or waiver thereof, for the proposed activity in accordance with Section 401 of the Clean Water Act. Certification or waiver indicates that IEPA believes the activity will not violate applicable water quality standards. The review by the IEPA is conducted in accordance with the Illinois water quality standards under 35 Illinois Administrative Code Subtitle C. The water quality standards provide for the IEPA to review individual projects by providing an antidegradation assessment, which includes an evaluation of alternatives to any proposed increase in pollutant loading that may result from this activity. The "Fact Sheet" containing the antidegradation assessment for this proposed project may be found on the IEPA's web site, at www.epa.state.il.us/public-notices/. In the event that the IEPA is unable to publish the "Fact Sheet" corresponding to the timeframe of this Joint Public Notice, a separate public notice and "Fact Sheet" will be published by the IEPA at the web site identified above. You may also obtain a copy of the "Fact Sheet" by contacting the IEPA at the address or telephone number shown below.
Written comments specifically concerning possible impacts to water quality should be addressed to:

Illinois Environmental Protection Agency
Bureau of Water
Watershed Management Section
1021 N. Grand Avenue East
P.O. Box 19276
Springfield, Illinois 62794-9276

A copy of all written comments should also be provided to the Corps of Engineers. If you have any questions please contact the IEPA at
(217) 782-3362.

SECTION 404 (b)(1) EVALUATION: The impact of the activity on the public interest will be evaluated in accordance with the Environmental Protection Agency guidelines pursuant to Section 404 (b)(1) of the Clean Water Act.

PUBLIC HEARING: Any person may request, in writing, within the comment period specified in this notice, that a public hearing be held to consider this application. Request for public hearings shall state, with particularity, the reasons for holding the public hearing.

ENDANGERED SPECIES: The proposed project is within the range of the endangered Indiana bat (**Myotis sodalis**), Gray bat **(Myotis gricescens)**, Higgin's eye pearly mussel **(Lampsilis higginsii)**, and the Decurrent false aster **(Boltonia decurrens)**. A preliminary determination, in compliance with the Endangered Species Act as amended, has been made that this proposed activity will not affect species designated as threatened or endangered, or adversely affect critical habitat. In order to complete our evaluation, written comments are hereby solicited from the U.S. Fish and Wildlife Service and other interested agencies to ascertain any potential impacts upon a listed species or their critical habitat.

CULTURAL RESOURCES: The St. Louis District will evaluate information provided by the State Historic Preservation Officer and the public in response to this public notice and we may conduct, or require a reconnaissance survey of the project area.

EVALUATION: The decision whether to issue a permit will be based on an evaluation of the probable impact including cumulative impacts of the described activity on the public interest. That decision will reflect the national concern for both protection and utilization of important resources. The benefit that may reasonably be expected to accrue from the described activity must be balanced against its reasonably foreseeable detriments. All factors, which may be relevant to the described activity will be considered including the cumulative effects thereof; among those are conservation, economics, aesthetics, general environmental concerns, wetlands, historic properties, fish and wildlife values, flood hazards, flood plain values, land use, navigation, shoreline erosion, and accretion, recreation, water supply and conservation, water quality, energy needs, safety, food and fiber production, mineral needs, consideration of property ownership and, in general, the needs and welfare of the people.

The U.S. Army Corps of Engineers is soliciting comments from the public; Federal, state, and local agencies and officials; Indian Tribes; and other interested parties in order to consider and evaluate the impacts of these proposed activities. Any comments received will be considered by the U.S. Army Corps of Engineers to determine whether to issue, modify, condition or deny a permit for this proposal. To make this decision, comments are used to assess impacts on endangered species, historic properties, water quality, general environmental effects, and other public interest factors listed above. Comments are used in the preparation of an Environmental Assessment and/or an Environmental Impact Statement pursuant to the National Environmental Policy Act. Comments are also used to determine the need for a public hearing and to determine the overall public interest of the proposed activity.

Danny D. McClendon

DANNY D. MCCLENDON
Chief, Regulatory Branch

Attachments

NOTICE TO POSTMASTERS:
It is requested that this notice be conspicuously and continually placed for 21 days from the date of this issuance of this notice.

Winneberg Marina Location

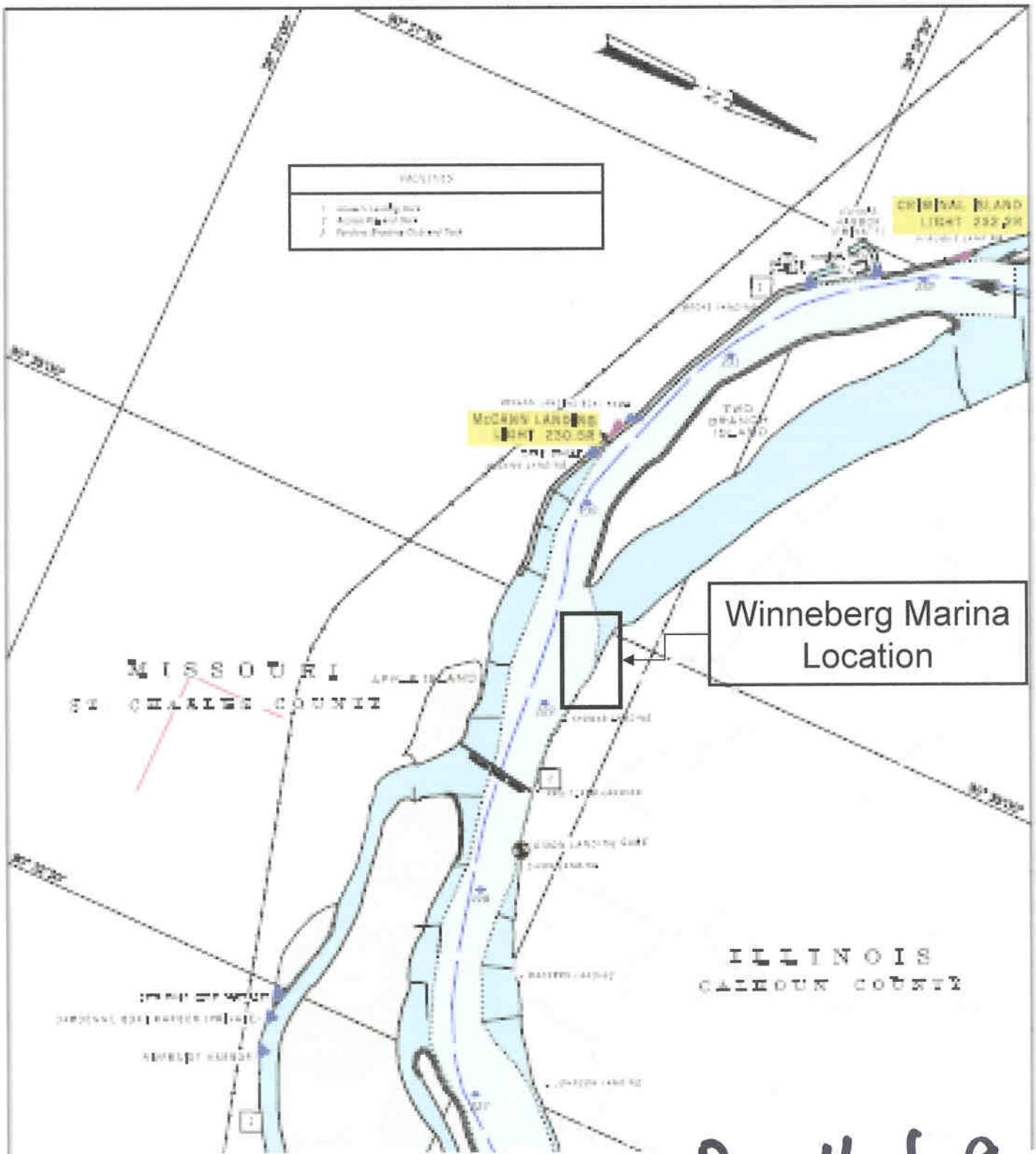

P-2652

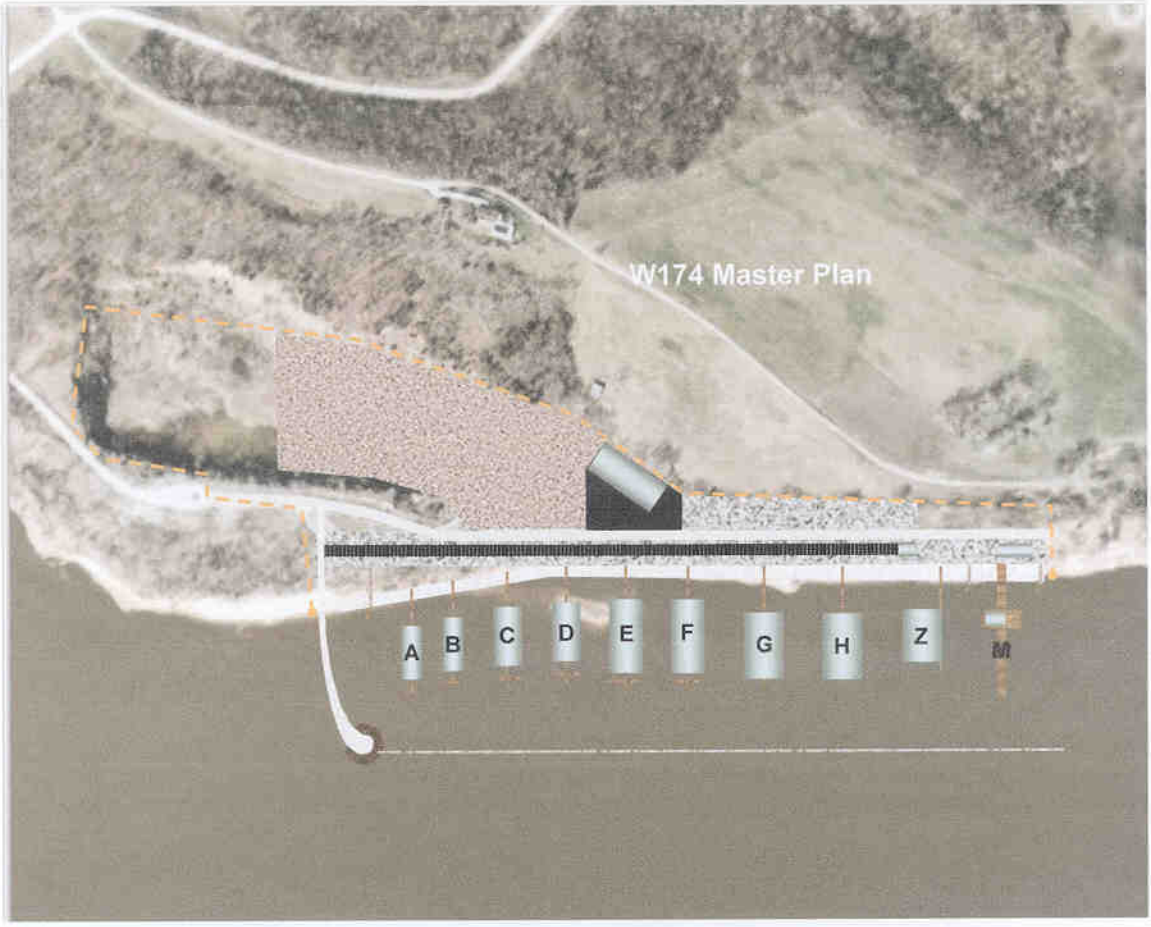
W174 Master Plan
A
B
C
D
E
F
G
H
Z
M

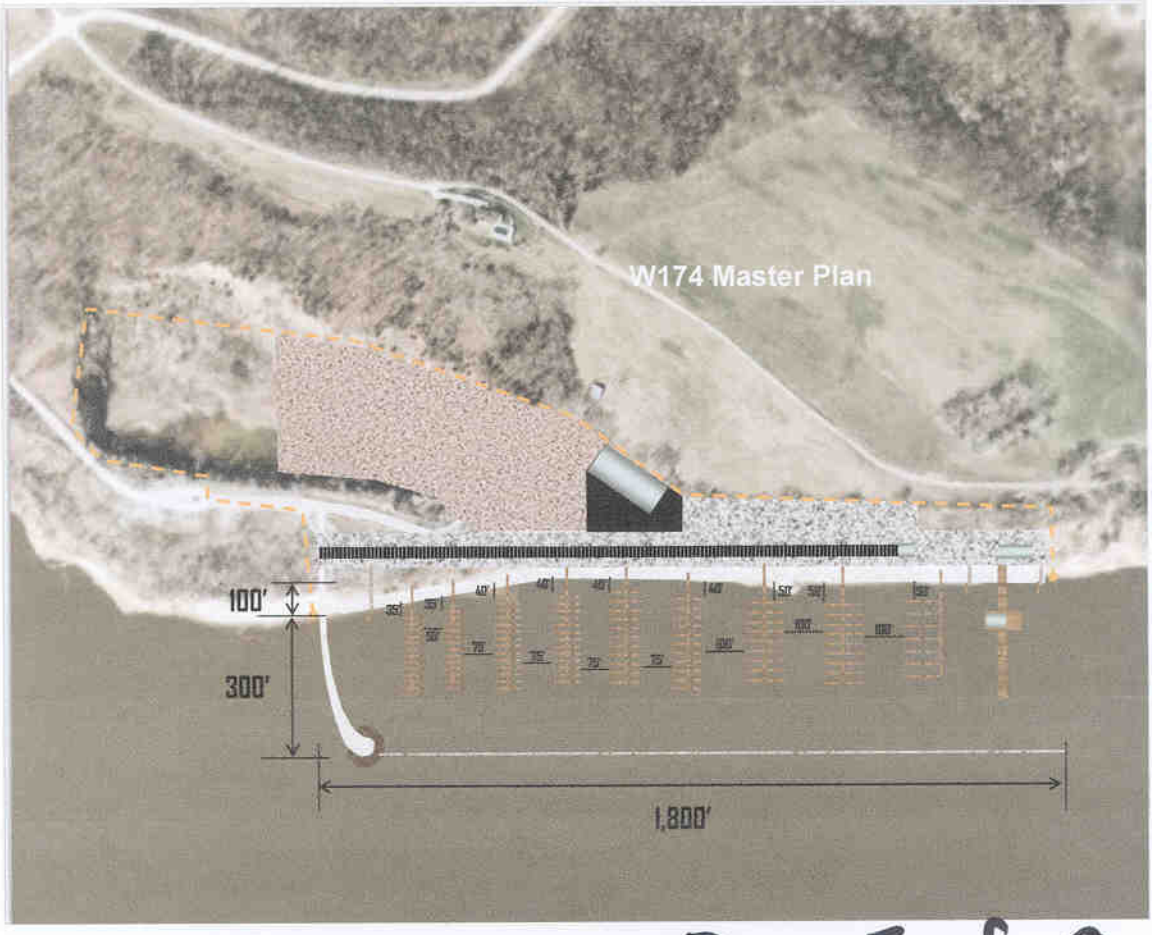
W174 Master Plan
100'
300'
1,800'

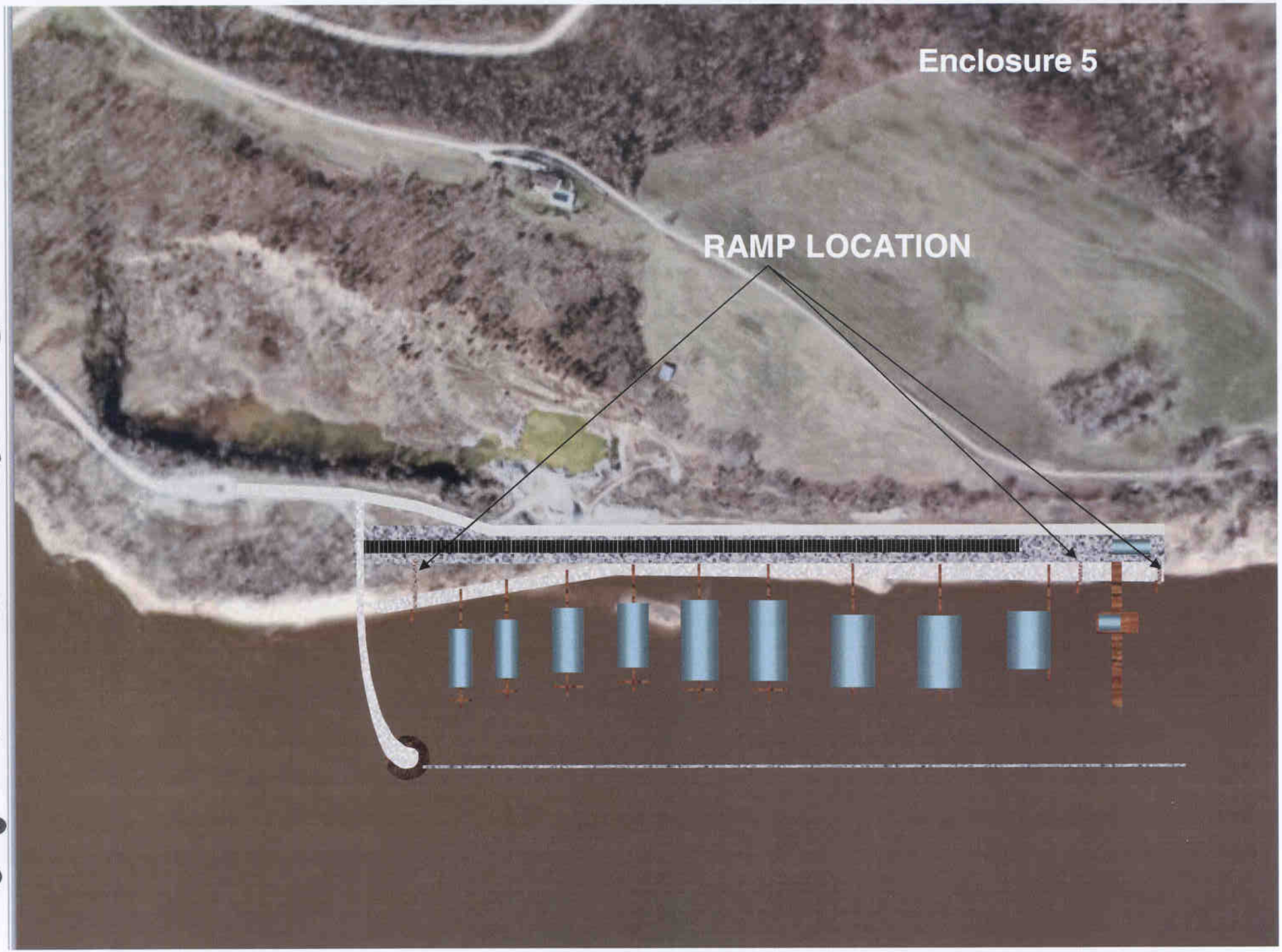
Enclosure 5
RAMP LOCATION

ENCLOSURE 3

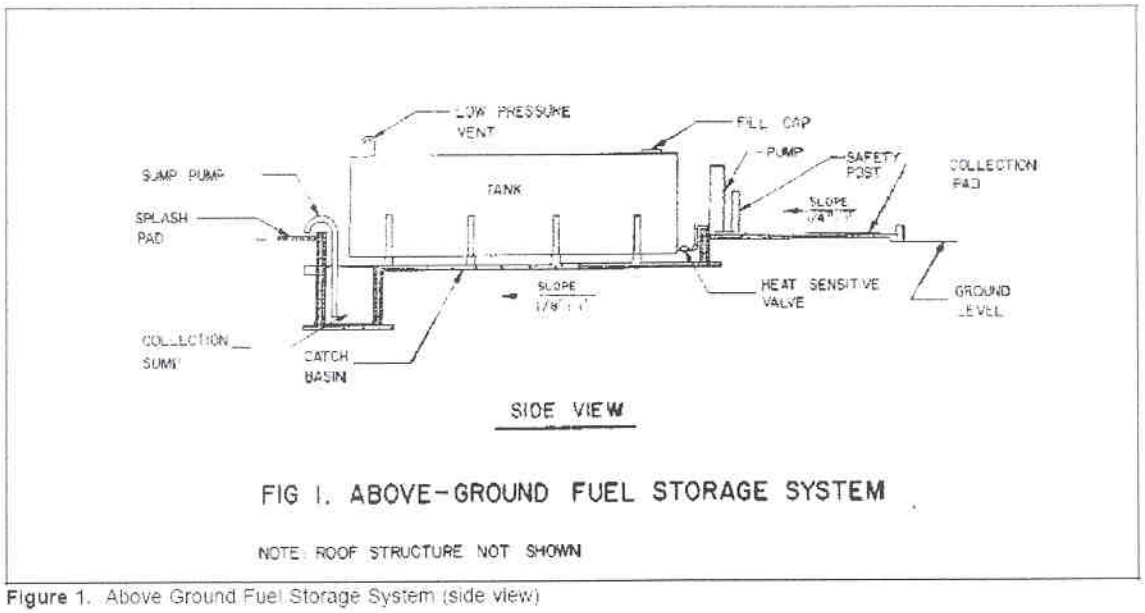

Figure 1. Above Ground Fuel Storage System (side view)

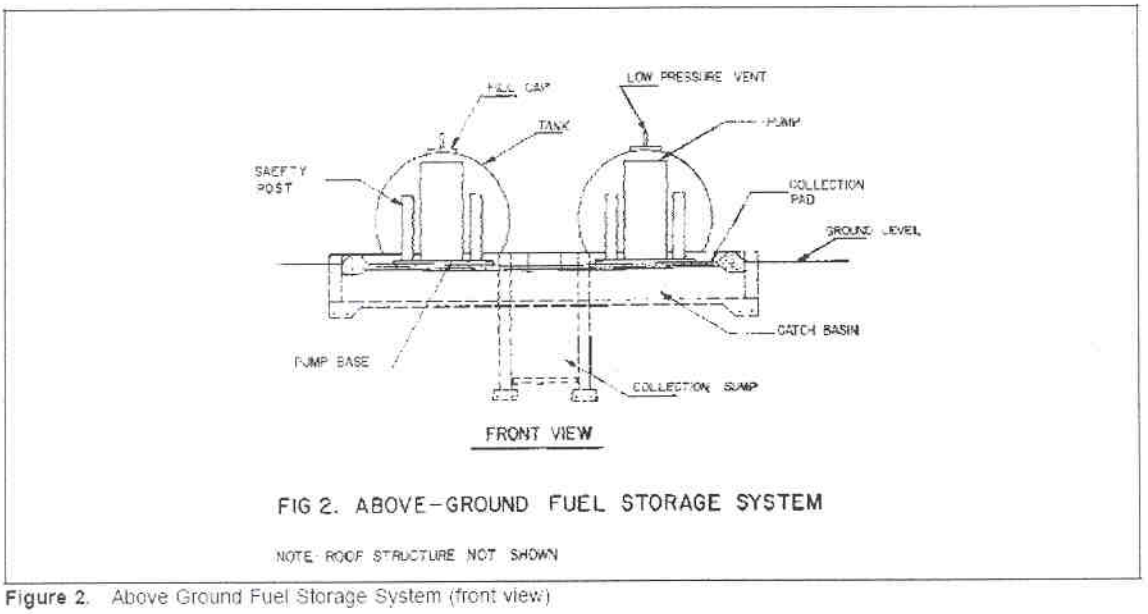

Figure 2. Above Ground Fuel Storage System (front view)

Enclosure 4

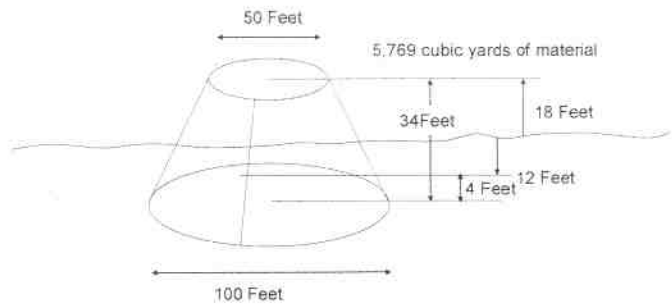

Jetty Construction Calculations

Length = 300 feet
Depth (average) = 34 feet (4 Feet settled in bottom, 12 feet submerged and 18 feet exposed at pool)
Width at bottom = 100 feet
Width at top = 10 feet
Cross section area = 1,870 ft2
Total volume = 300 ft x 1,870 ft2 = 561,000ft3
Total volume = 20,777 yd3
SLOPE is appx 1.5:1

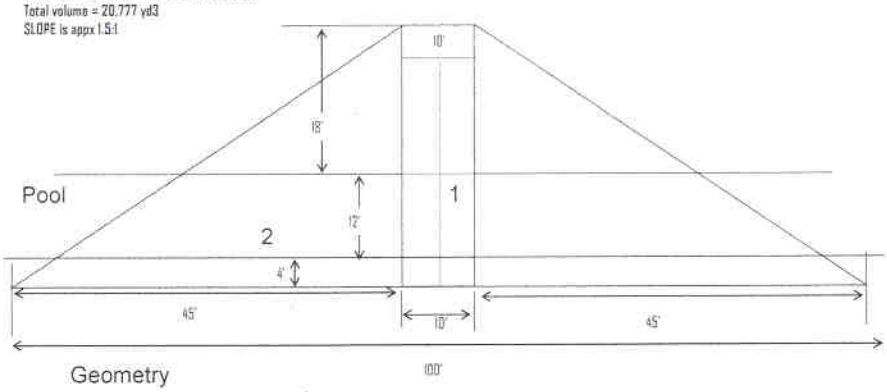

Geometry
Area1 = 10 x 34 = 340 ft2
Area2 = .5 x 34 x 45 = 765 ft2
Total Area = 340 + 765 + 765 = 1,870 ft2

P-2652
Page 8 of 9

U.S. Army Corps of Engineers Applied River Engineering Center Sedimentation results

Winneberg Marina Project

The proposed marina will consist of a 300 foot rock jetty perpendicular to the Left Descending Bank (LDB) and 1800 feet of longitudinal floating breakwater. The marina will be located on the LDB near River Mile 229.5L, at the exit of Two Branch Slough. Review of the Winneberg Marina Project consisted of brief analysis of its effect to the navigation channel, ferry crossing, and environment.

Impact to the navigation channel

The physical location of the marina will not have any significant impact on the navigation channel. The marina is located on the LDB while the navigation channel at this location is on the opposite bank, the Right Descending Bank (RDB). The channel width at this location is over 2500 feet and the 300 foot rock jetty structure will not have a negative impact to the navigation channel. Additionally, the majority of the channel energy is located on the RDB at the same location as the navigation channel. Negative impact to navigation channel is very unlikely.

Impact to the Ferry Crossing

The rock jetty structure will be located over 4000 feet upstream of the ferry crossing, in a low energy section of the channel. Bedload movement will be limited due to the location of this marina. Some scour off of the tip of the structure is expected, but the distance from the hardened structure to the ferry crossing is sufficient to allow the disturbed material to re-settle. The remaining portion of the marina will be constructed of floating breakwater, thereby limiting bedload disturbance. During construction, the dredge spoil material will be placed on land so its impact will be negligible. Negative impact to the ferry crossing should be minimal.

Impact to the Environment

The location of the proposed marina is at the exit of Two Branch Slough. The slough has several closure structures at the entrance limiting the amount of flow and creating a slack water environment. The location and design of the slough should not have significant negative impacts on the slough or restrict access to the slough. Negative impact to the environment is unlikely.

Overall Impact

It is our recommendation, based on this preliminary analysis, that the construction and operation of the Winneburg Marina will have minimal impact to navigation channel, ferry crossing, and environment.