DEPARTMENT OF THE ARMY PERMIT

Regional Permit 16
Bank Stabilization Activities
in the State of Illinois

Permittee: This Regional Permit authorizes activities proposed by the general public, railroads, transportation departments, pipeline and utility companies, and government agencies.

Number: Illinois Regional Permit 16 (IRP-16)

Expiration Date: March 11, 2016

Issuing Office: U.S. Army Corps of Engineers, St. Louis District
Regulatory Branch, 1222 Spruce Street
St. Louis, Missouri 63103-2833

You are authorized to perform work in accordance with the terms and conditions specified below.

NOTE: The term "you" and its derivatives, as used in this permit, means the permittee or any future transferee. The term "this office" refers to the appropriate district or division office of the Corps of Engineers having jurisdiction over the permitted activity or the appropriate official of that office acting under the authority of the commanding officer.

Project Description. The following bank stabilization techniques will be authorized under this regional permit: blanket riprap, seawalls, gabions, minor bank shaping with appropriate biotechnical streambank protection techniques, bendway weirs, longitudinal peaked stone riprap, stone hardpoints, stream barbs, and rock riffles. For design projects not specifically listed, the plans must be approved by the Corps of Engineers and the Illinois Department of Natural Resources, Office of Water Resources.

Project Location. This regional permit will authorize work associated with fill and/or structural materials placed for bank stabilization in waters of the United States within the State of Illinois, **except** in Cook, DuPage, Kane, Lake, McHenry and Will Counties.

Permit Conditions:

General Conditions:

1. The time limit for completing the work authorized ends 3 years from the date of each individual project determination. If you find that you need more time to complete the authorized activity, submit your request for a time extension to this office for consideration at least one month before that date is reached.

2. You must maintain the activity authorized by this permit in good condition and in conformance with the terms and conditions of this permit. You are not relieved of this requirement if you abandon the permitted activity, although you may make a good faith transfer to a third party, in compliance with General Condition 4 below. Should you wish to cease to maintain the authorized activity or should you desire to abandon it without a good faith transfer, you must obtain a modification of this permit from this office, which may require restoration of the area.

3. If you discover any previously unknown historic or archaeological remains while accomplishing the activity authorized by this permit, you must immediately notify this office of what you have found. We will initiate the Federal and state coordination required to determine if the remains warrant a recovery effort or if the site is eligible for listing in the National Register of Historic Places.

4. If you sell the property associated with this permit, you must obtain the signature of the new owner in the space provided and forward a copy of the permit to this office to validate the transfer of this authorization.

5. If a conditioned water quality certification has been issued for your project, you must comply with the conditions specified in the certification as special conditions to this permit. For your convenience, a copy of the certification is attached if it contains such conditions. (Condition is not applicable for Section 10 Permits.)

6. You must allow representatives from this office to inspect the authorized activity at any time deemed necessary to ensure that it is being or has been accomplished in accordance with the terms and conditions of your permit.

Special Conditions:

1. **Design Specifications**. The Corps of Engineers may add additional special conditions as deemed appropriate to protect the aquatic environment on a case-by-case basis for any activity authorized under this regional permit.

a. Blanket riprap.

- Bank shoreline protection must be less than 1,000 feet in length and must contain less than two cubic yards of fill material per running foot below the ordinary high water mark.

- For projects involving continuous placement of riprap along the bank, toe of the bank, or other similar applications, the cross sectional area of the natural channel shall not be reduced by more than 10 percent nor the volume of material exceed 2 cubic yards per lineal foot of stream bank or shoreline. The bank may be graded to obtain a flatter slope and to lessen the quantity of material required.

- A well distributed mix of stones weighing from 20 to 200 pounds should be used.

- The riprap should be from 12 inches to 18 inches thick. Portions of the riprap layer under water should be increased to 18 inches to 30 inches thick.

- Riprap materials shall not be placed at a steeper slope than 2:1 (2 horizontal to 1 vertical) for dumped riprap and 1.5:1 for hand-placed riprap. A bedding layer of either six inches of gravel or filter material must be used if required to prevent loss of fines through the riprap material. The riprap must be sized to withstand the anticipated forces from flood flows or wave action.

- A riprap trench or apron should be provided at the base of the protected bank for stability.

- Both ends of the project should be tied into the bank, with the most common method being to excavate a trench in the bank and fill it with riprap. Additionally the project should be tied into the bank at regular intervals of between 100 feet and 200 feet.

b. Seawalls and Gabions. Seawalls and gabions shall be constructed at or landward of the water line as determined by the normal pool elevation unless:

- It is constructed in alignment with any existing seawall(s) or gabion structure(s).

- The volume of material placed, including the structure, will not exceed 2 cubic yards per lineal foot.

- The cross sectional area of the natural channel shall not be reduced by more than 10 percent nor the volume of material exceed 2 cubic yards per lineal foot of stream bank or shoreline. The bank may be graded to obtain a flatter slope and to lessen the quantity of material required.

c. Bank shaping with appropriate biotechnical streambank protection techniques. Minimal grading and bank shaping activities for state-of-the-art natural vegetative stabilization methods, such as the willow post method, will be authorized under this regional permit. No material produced as a result of grading and bank shaping shall be deposited into any water of the US, including wetland areas. Material produced by grading and bank shaping shall be pulled back from the water's edge.

d. Hard points. Hard points are short rock intrusions extending only a short distance from the bank. Jetties, which extend from the bank further than hard points, are specifically excluded from this regional permit. Hard points may be used if they are keyed into the bank and if they do not extend from the bank more than the minimum necessary to achieve adequate erosion protection. The Corps of Engineers will determine on a case by case basis whether the proposed hard point is acceptable for the stream.

e. Longitudinal peaked stone riprap. Longitudinal peaked stone riprap is a continuous stone dike placed along the toe of the bank. Riprap with a gradation from maximum stone size of 400 pounds to 50 to 70 percent smaller than a 90 pound stone size is placed in a pyramid or triangular shaped cross section at the toe of an eroding bank without shaping the banks. The riprap should be tied into the bank at both the upstream and downstream ends. Additionally, short riprap dikes should be tied into the bank at regular intervals of between 100 feet and 200 feet. The construction of longitudinal peaked stone riprap is not authorized under this Regional Permit on the Mississippi River or on the Illinois River.

f. Bendway weirs. A bendway weir is a low-level rock sill located in the channel of a bend angled 0 degrees to 25 degrees upstream into the stream flow. The structures are spaced approximately 50 feet to 150 feet apart. The weirs should be attached (keyed into) the outer bank of the stream bend. The weirs should be built of well-graded stone with an upper weight limit of 650 pounds to 1000 pounds. Typically, the weirs are 2 feet high at the stream end and rise to 4 feet high at the bank end. Bendway weirs act to redirect the flow away from the eroding bank as flow over the weir is redirected at right angles to the downstream face of the weir. Bendway weirs may extend into the channel a maximum of 50% of stream width. Bendway weirs should be constructed based on engineering/design principles developed by the U. S. Army Corps of Engineers. The construction of bendway weirs are not be authorized under this Regional Permit on the Mississippi River or on the Illinois River.

g. Stream barbs. A stream barb is a rock structure which projects out from the bank on a sharp upstream angle of 20 to 30 degrees, measured from bank tangent line. Stream barbs are designed to direct the stream current away from the eroding bank to the center of the channel. The barbs will be built of well-graded stone with an upper weight limit of 650 pounds to 1000 pounds. At the bank, the top of the barbs will be constructed to the design height, typically 4 to 8 feet above the streambed. The top of the barbs will incline from the bank end to streambed level at the streamward end. The incline will be according to design, typically 10% (10 horizontal to 1 vertical). On silt-bottom streams, the barbs will be keyed into the streambed by excavating a core trench for the full length of the barb and backfilling with riprap rock. The barbs will be keyed into the outer bank. The bank key trench will be excavated perpendicular to the streambank from streambed to top-of-bank, and backfilled with riprap rock. Stream barbs are designed to extend into the channel a maximum of 35% of stream width. Stream barbs should be constructed on engineering/design principles developed by the U.S. Army Corps of Engineers and the U.S. Department of Agriculture, Natural Resources Conservation Service. The construction of stream barbs is not to be authorized under this Regional Permit on the Mississippi River or on the Illinois River.

h. Rock Riffles. Rock riffle structures are low-head weir structures constructed over the streambed from bank-to-bank. Constructed rock riffles are used to stabilize the streambed where downcutting erosion is occurring. Rock riffles will be built of well-graded riprap rock with an upper weight limit of 650 pounds to 1000 pounds. The largest individual stones will be sorted from the stockpiled rock to be placed as emergent boulders and crest stone. The crest of the riffle will be "V" shaped on the centerline of the structure. From the crest, the downstream slope will be no steeper than 20H:1V, and the upstream slope will be no steeper than 4H:1V. Riffle structures will be keyed into the streambed and bank using riprap rock. Bed keys will be constructed from bank-to-bank with a minimum depth of 2 feet and minimum width of 4 feet. Bank keys will be constructed, into both banks, with a minimum depth of 5 feet and a minimum width of 4 feet, extending upward on a 1.5h to 1v slope toward the top-of-bank. Rock riffles shall be constructed to design standards of the U.S. Department of Agriculture, Natural Regional Permit on the Mississippi River or on the Illinois River.

2. **General restrictions**. These general restrictions must be met for all bank stabilization projects to be authorized under this regional permit.

a. The total affected length of shoreline, stream bank, or channel to be protected shall not exceed 1000 feet.

b. Generally, only those reaches of shoreline, stream bank, and channel which are experiencing erosion are covered by this regional permit. No material shall be placed in excess of the minimum needed for erosion protection.

c. This Regional Permit does not authorize any of the following activities: stream channelization; channel modifications such as excavating pilot channels; the placement of materials other than on an area of eroded bank; and projects which conflict with a Federal, state, or local project or improvement.

d. The following materials may not be used for projects to be authorized under this regional permit: auto bodies, tires, garbage or debris, scrap lumber, metal refuse, roofing materials, broken concrete containing asphalt, asphalt or other bituminous materials, or any material which would cause water pollution as defined by the Illinois Environmental Protection Agency. If approval is not specifically granted for a specific material, it is deemed to not be allowable under this Regional Permit.

e. The following materials may be used: suitable clean materials, free from debris, trash, and other deleterious materials; rock, broken concrete, steel sheet piling, cellular blocks, fabric-formed concrete, concrete filled fabric mats, gabion baskets, rock and wire mattresses, sand/cement filled bags, geotechnical fabric materials, natural vegetation (with proper grading), and treated timber. If broken concrete is used, all protruding material such as reinforcing rods shall be cut flush with the surface of the concrete and removed from the construction area. If approval is not specifically granted for a specific material, it is deemed to not be allowable under this Regional Permit.

f. All material utilized shall be properly sized or anchored to resist anticipated forces of current and wave action.

g. Materials shall be placed in such a way which will not cause erosion, or the accumulation of debris on properties adjacent to or opposite the project.

h. Materials shall be placed so that the modified bank full width and cross sectional area of the channel will conform to, or be no more restrictive than, that of the natural channel upstream and downstream of the site.

i. Disturbance of vegetation shall be kept to a minimum during construction to prevent erosion and sedimentation. All disturbed areas shall be seeded or otherwise stabilized upon completion of construction.

j. Excess material excavated during the construction of bank or shoreline protection shall be placed in accordance with local, state, and Federal laws and shall not be placed in a floodway or in any water of the U.S. including wetlands.

k. The use of natural materials will be considered for bank protection on designated segments of the Nationwide River Inventory where feasible and appropriate. When not feasible and/or appropriate and after riprap is placed, the proponent will promote revegetation of the area protected.

l. Endangered Species.

- Individual projects proposed under this regional permit must not jeopardize the continued existence of any species or the critical habitat of any fish and wildlife, or plant which is designated as endangered or threatened pursuant to the Endangered Species Act of 1973 as amended (16 U.S.C. 1531 et seq.).

- The habitat range of the decurrent false aster (Boltonia decurrens) is located within the floodplain of the Mississippi River (St. Clair, Alexander, Jackson, Monroe, Randolph, and Union Counties) and the floodplain of the Illinois River (Bureau, Fulton, Jersey, Marshall, Mason, Morgan, Peoria, Putnam, Schuyler, Tazewell, Woodford, Brown, Calhoun, Cass, Green, Grundy, LaSalle, Madison, Pike, and Scott Counties). The proponent of any project proposed within one of these counties in the 100-year floodplain of the Mississippi River or the Illinois River or where a tributary stream flows into the 100-year floodplain of

Mississippi River or the Illinois River must arrange for the project site to be investigated by a qualified botanist or environmental scientist for the occurrence of the Federally threatened plant species. Written documentation, provided by the botanist or environmental scientist, must be provided to the Corps of Engineers for consultation with the U.S. Fish and Wildlife Service to ensure compliance with the Endangered Species Act of 1973 as amended (16 U.S.C. 1531 et seq.).

m. Projects in environmentally sensitive areas (wetlands, endangered species, etc.) shall be excluded from processing under this regional permit. Also, if in the opinion of the Corps of Engineers, the project may not be in the public interest due to any unique circumstances, the Corps may require an individual permit on a case-by-case basis.

n. This Regional Permit does not authorize the discharge of fill into wetland areas.

o. If, at any future date, the Illinois Department of Natural Resources, Office of Water Resources, (IDNR/OWR) or the Corps of Engineers determines that the bank stabilization obstructs or impairs navigation, or in any way infringes on the rights or interests of the public or any individual party, the permittee agrees to make necessary modifications to the material as determined by the IDNR/OWR or the Corps of Engineers.

p. The project proponent must notify the appropriate public or private utility in advance of any work within 250 feet of an underground utility so that the utility is not damaged during construction activities.

q. Individual projects to be authorized under the regional permit must not be located in the proximity of property listed in the National Register of Historic Places nor in the vicinity of properties listed in the Federal Register as eligible for inclusion in the National Register of Historic Places unless, after coordination with the State Historic Preservation Officer of the State of Illinois and the Advisory Council on Historic Preservation, a determination of "no effect" or "no adverse effect" is made in accordance with criteria established by 36 CFR 800.4.

Under this Regional Permit, the Rock Island District of the U.S. Army Corps of Engineers authorizes the permittee to initiate consultation with State Historic Preservation Officers and Tribal Historic Preservation Officers (SHPO/THPO) and other consulting parties as provided for at 36 CFR 800.2(c)(5) in the Advisory Council on Historic Preservation regulations for the **Protection of Historic Properties; Recommended Approach for Consultation on Recovery of Significant Information from Archaeological Sites; Final Rule and Notice** (Federal Register Vol. 64, No. 95, pp. 27071-27087, May 18, 1999). All findings and determinations resulting from the consultation shall be provided to the Corps of Engineers which shall remain legally responsible for all findings and determinations once agreed to by the Corps and formalized through the process provided for in 36 CFR 800. If, during construction, the permittee uncovers an item or items that may be of historic or archaeological interest or if important new historic data comes to light in the project area, the District Engineer shall be notified immediately and the work will be delayed a sufficient time to carry out the requirements for post-review discoveries as set out at 36 CFR 800.13 (b-d) and/or the requirements of the Illinois Human Skeletal Remains Protection Act (20 ILCS 3440/), as applicable.

r. Individual projects to be authorized under this Regional Permit must not be located within sites included in the National Register of National Landmarks or any other areas named in Acts of Congress or Presidential proclamations as National Rivers, National Wilderness Areas, National Recreational Areas, National Lakeshores, National Parks, National Monuments, National Wild and Scenic River Systems, National Wild Life Refuge System, and such areas as may be established under Federal Law for similar and related purposes unless the activity is specifically authorized by the appropriate Federal agency.

s. Parties proposing to undertake work under the provisions of this Regional Permit must provide prior notification to the appropriate Corps of Engineers District. Information submitted by the proponent must clearly determine whether or not the proposed work complies with the conditions and limitations of the regional permit. The proponent will be notified within 15 workdays if the project is in compliance with the conditions of the regional permit and whether project construction may proceed. However, this will not alleviate the need of the proponent to obtain other applicable state or local authorization.

t. The Corps of Engineers will determine on a case by case basis if a particular project proposal will fall under the auspices of this Regional Permit.

5. **Water quality certification**. The conditions listed in the attached letter from the Illinois Environmental Protection Agency, Log #C-0058-10 dated March 11, 2011, are considered to be part of this Regional Permit.

6. The permitee understands and agrees that, if future operations by the United States require the removal, relocation, or other alteration, of the structure or work herein authorized, or if, in the opinion of the Secretary of the Army or his authorized representative, said structure or work shall cause unreasonable obstruction to the free navigation of the navigable waters, the permittee will be required, upon due notice from the Corps of Engineers, to remove, relocate, or alter the structural work or obstructions caused thereby, without expense to the United States. No claim shall be made against the United States on account of any such removal or alteration.

<<<<< END OF SPECIAL CONDITIONS >>>>>

Further information:

1. Congressional Authorities: You have been authorized to undertake the activity described above pursuant to:

(**X**) Section 10 of the Rivers and Harbors Act of 1899 (33 U.S.C. 403).

(**X**) Section 404 of the Clean Water Act (33 U.S.C. 1344).

( ) Section 103 of the Marine Protection, Research and Sanctuaries Act of 1972 (33 U.S.C. 1413).

2. Limits of this authorization.

a. This permit does not obviate the need to obtain other Federal, state, or local authorizations required by law.

b. This permit does not grant any property rights or exclusive privileges.

c. This permit does not authorize any injury to the property or rights of others.

d. This permit does not authorize interference with any existing or proposed Federal project.

3. Limits of Federal Liability. In issuing this permit, the Federal Government does not assume any liability for the following:

a. Damages to the permitted project or uses thereof as a result of other permitted or unpermitted activities or from natural causes.

b. Damages to the permitted project or uses thereof as a result of current or future activities undertaken by or on behalf of the United States in the public interest.

c. Damages to persons, property, or to other permitted or unpermitted activities or structures caused by the activity authorized by this permit.

d. Design or construction deficiencies associated with the permitted work.

e. Damage claims associated with any future modification, suspension, or revocation of this permit.

4. Reliance on Applicant's Data: The determination of this office that issuance of this permit is not contrary to the public interest was made in reliance on the information you provided.

5. Reevaluation of Permit Decision. This office may reevaluate its decision on this permit at any time the circumstances warrant. Circumstances that could require a reevaluation include, but are not limited to, the following:

a. You fail to comply with the terms and conditions of this permit.

b. The information provided by you in support of your permit application proves to have been false, incomplete, or inaccurate (See 4 above).

c. Significant new information surfaces which this office did not consider in reaching the original public interest decision.

Such a reevaluation may result in a determination that it is appropriate to use the suspension, modification, and revocation procedures contained in 33 CFR 325.7 or enforcement procedures such as those contained in 33 CFR 326.4 and 326.5. The referenced enforcement procedures provide for the issuance of an administrative order requiring you to comply with the terms and conditions of your permit and for the initiation of legal action where appropriate. You will be required to pay for any corrective measures ordered by this office, and if you fail to comply with such directive, this office may in certain situations (such as those specified in 33 CFR 209.170) accomplish the corrective measures by contract or otherwise and bill you for the cost.

6. Extensions. General condition 1 establishes a time limit for the completion of the activity authorized by this permit. Unless there are circumstances requiring either a prompt completion of the unauthorized activity or a reevaluation of the public interest decision, the Corps will normally give favorable consideration to a request for an extension of this time limit.

Danny D. McClendon — 9/29/11

Christopher G. Hall
Colonel, U.S. Army
Commander & District Engineer
St. Louis District
BY: Danny D. McClendon
Chief, Regulatory Branch

Date

When the structures or work authorized by this permit are still in existence at the time the property is transferred, the terms and conditions of this permit will continue to be binding on the new owner(s) of the property. To validate the transfer of this permit and the associated liabilities associated with compliance with its terms and conditions, have the transferee sign and date below.

Transferee

Date

ILLINOIS ENVIRONMENTAL PROTECTION AGENCY

1021 North Grand Avenue East, P.O. Box 19276, Springfield, Illinois 62794-9276 • (217) 782-2829
James R. Thompson Center, 100 West Randolph, Suite 11-300, Chicago, IL 60601 • (312) 814-6026

PAT QUINN, GOVERNOR DOUGLAS P. SCOTT, DIRECTOR

217/782-3362

RECEIVED
MAR 14 2011
CEMVR-OD-P

MAR 11 2011

Rock Island District
Corps of Engineers
Regulatory Branch, Post Office Box 2004
Clock Tower Building
Rock Island, IL 61204-2004

St. Louis District
Corps of Engineers
Regulatory Branch
1222 Spruce Street
St. Louis, MO 63103

Louisville District
Corps of Engineers
Regulatory Branch
600 Federal Place
Louisville, KY 40201

Memphis District
Corps of Engineers
167 North Main, B-202
Memphis, TN 38103-1894

Re: Corps of Engineers Districts: Rock Island District, St. Louis District, Louisville District, and Memphis District
Re-Issuance of Regional Permit 16 Bank Stabilization Activities
Log # C-0058-10 [CoE appl. # 2010-0112]

Gentlemen:

This Agency received a request on April 1, 2010 from U.S Army Corps of Engineers, Rock island District, St. Louis District, Louisville District, and Memphis District requesting necessary comments concerning the re-issuance of Regional Permit 16 Bank Stabilization Activities in the State of Illinois. We offer the following comments.

Based on the information included in this submittal, it is our engineering judgment that the proposed project may be completed without causing water pollution as defined in the Illinois Environmental Protection Act, provided the project is carefully planned and supervised.

These comments are directed at the effect on water quality of the construction procedures involved in the above described project and are not an approval of any discharge resulting from the completed facility, nor an approval of the design of the facility. These comments do not supplant any permit responsibilities of the applicant toward the Agency.

This Agency hereby issues certification under Section 401 of the Clean Water Act (PL 95-217), subject to the applicant's compliance with the following conditions:

1. The applicant shall not cause:

   a. violation of applicable water quality standards of the Illinois Pollution Control Board, Title 35, Subtitle C: Water Pollution Rules and Regulations;

   b. water pollution defined and prohibited by the Illinois Environmental Protection Act; or

   c. interference with water use practices near public recreation areas or water supply intakes.

2. The applicant shall provide adequate planning and supervision during the project construction period for implementing construction methods, processes and cleanup procedures necessary to prevent water pollution and control erosion.

3. Any spoil material excavated, dredged or otherwise produced must not be returned to the waterway but must be deposited in a self-contained area in compliance with all state statutes, regulations and permit requirements with no discharge to waters of the State unless a permit has been issued by this Agency. Any backfilling must be done with clean material and placed in a manner to prevent violation of applicable water quality standards.

4. All areas affected by construction shall be mulched and seeded as soon after construction as possible. The applicant shall undertake necessary measures and procedures to reduce erosion during construction. Interim measures to prevent erosion during construction shall be taken and may include the installation of staked straw bales, sedimentation basins and temporary mulching. All construction within the waterway shall be constructed during zero or low flow conditions. The applicant shall be responsible for obtaining an NPDES Storm Water Permit prior to initiating construction if the construction activity associated with the project will result in the disturbance of 1 (one) or more acres, total land area. An NPDES Storm Water Permit may be obtained by submitting a properly completed Notice of Intent (NOI) form by certified mail to the Agency's Division of Water Pollution Control, Permit Section.

5. Asphalt, bituminous material and concrete with protruding material such as reinforcing bar or mesh shall not be 1) used for backfill, 2) placed on shorelines/streambanks, or 3) placed in waters of the State.

6. The applicant shall implement erosion control measures consistent with the "Illinois Urban Manual" (IEPA/USDA, NRCS; 2010).

7. The fill material used for temporary work areas in waters of the State shall be predominantly sand or larger size material, with <20% passing a #230 U. S. sieve.

This certification becomes effective when the Department of the Army, Corps of Engineers, includes the above conditions # 1 through # 7 as conditions of the requested permit issued pursuant to Section 404 of PL 95-217.

This certification does not grant immunity from any enforcement action found necessary by this Agency to meet its responsibilities in prevention, abatement, and control of water pollution.

Sincerely,

Alan Keller

Alan Keller, P.E.
Manager, Permit Section
Division of Water Pollution Control

SAK:DLH:DRG:C-0058-10_401 WQ Certification_01Apr10.docx

cc: IEPA, Records Unit
IEPA, DWPC, FOS, Rockford
IEPA, DWPC, FOS, DesPlaines
IEPA, DWPC, FOS, Peoria
IEPA, DWPC, FOS, Champaign
IEPA, DWPC, FOS, Springfield
IEPA, DWPC, FOS, Collinsville
IEPA, DWPC, FOS, Marion
IDNR, OWR, Springfield
USEPA, Region 5

NOTES:

1. Geotextile (non-woven) minimum criteria:
   - Weight of Geotextile (oz/sq.yd.) ____ 6
   - Tensile strength (lb) ASTM D 4632 ____ 180
   - Elongation at failure (%) ASTM D 4632 ____ ≥ 50
   - Puncture (lb) ASTM D 4833 ____ 80
   - Ultraviolet light ASTM D 4355 ____ 70
   - Apparent opening size (AOS) ASTM D 4751 ____ max 40 sieve
   - Permittivity sec^{-1} ASTM D 4491 ____ 0.70
2. Any geotextile splices shall overlap a minimum of 18 inches, with upstream or upslope geotextile overlapping the abutting downslope geotextile.
3. The rock shall be compacted with the placement equipment to increase in-place density. The complete job shall present a workmanlike finish.

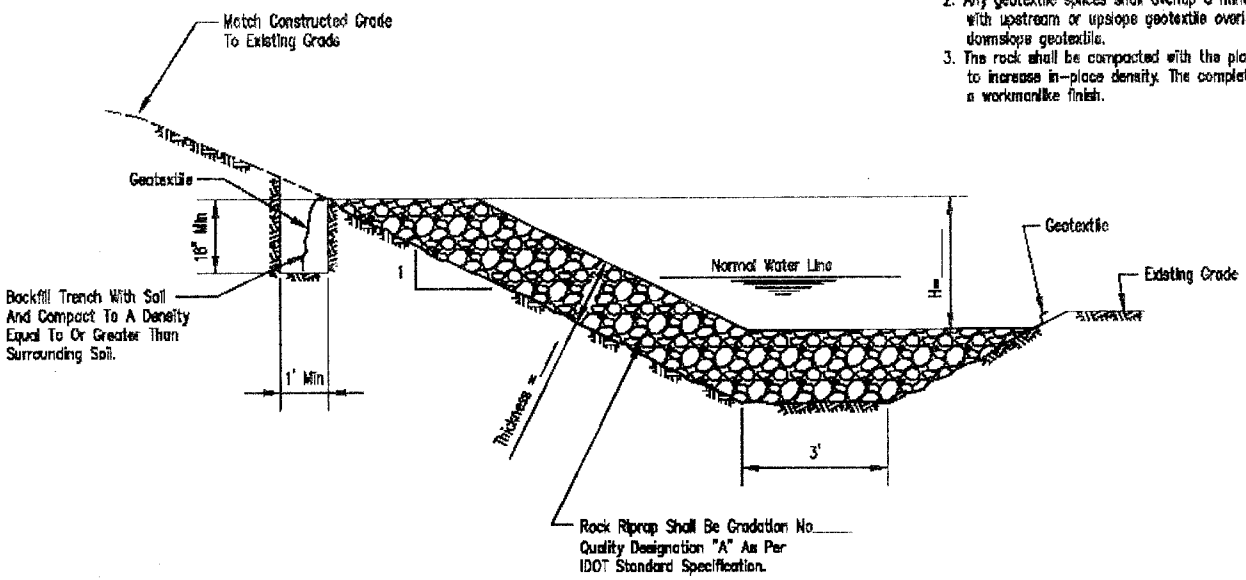

SECTION

Adapted from Standard Drawing IL-640 in the Illinois Urban Manual.

ROCK RIPRAP STREAMBANK PROTECTION DETAIL

NRCS

File No. IL-ENG-182

Drawing No.

Sheet 1 of 1

CEMVR-OD-P-2010-112
Rock Riprap – Section
Sheet 1 of 8

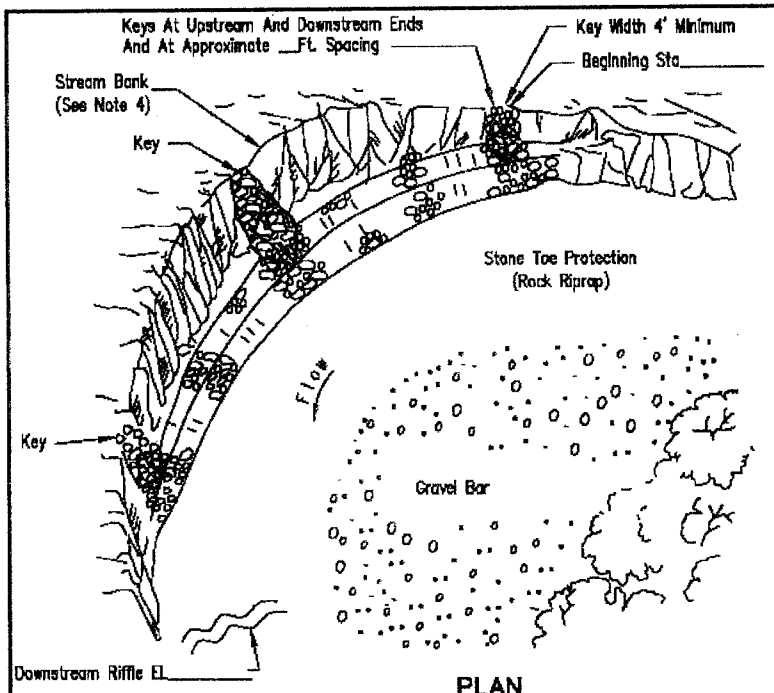

PLAN

Key	Sta.	h_1	W_1	Level Crest EL.

Benchmark EL.
Description

Beginning Sta. Description

Notes:
1. Rock gradation shall meet IDOT requirements for GRAD. NO.___ riprap, quality designation "A", or as designated by engineer.
2. Stone Toe ___ft @_____Tons/Ft. average
Keys _____ @_____Tons Each
Total Rock Amount (Estimate)_____Tons
3. Key shall be constructed so that the vertical section remains embedded in the existing stream bank.
4. Location___ side of streambank looking downstream.

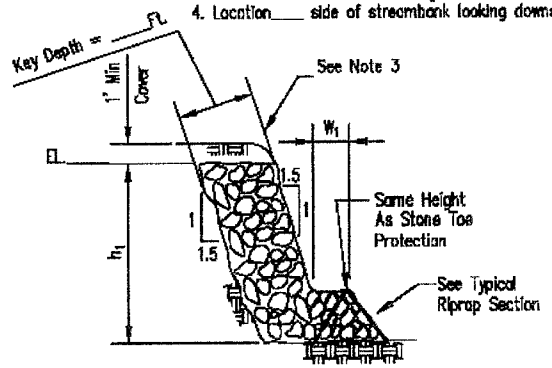

KEY DETAIL

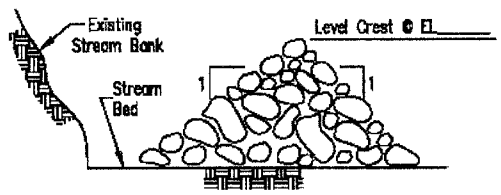

TYPICAL RIPRAP SECTION

NOT TO SCALE

Landowner		Stream		Location	

STREAM BANK STABILIZATION
STONE TOE PROTECTION

NRCS
Natural Resources Conservation Service
United States Department of Agriculture

File No. IL-ENG-152
Drawing No.

Sheet 1 of 1

CEMVR-OD-P-2010-112
Stone Toe Protection – Plan & Section
Sheet 2 of 8

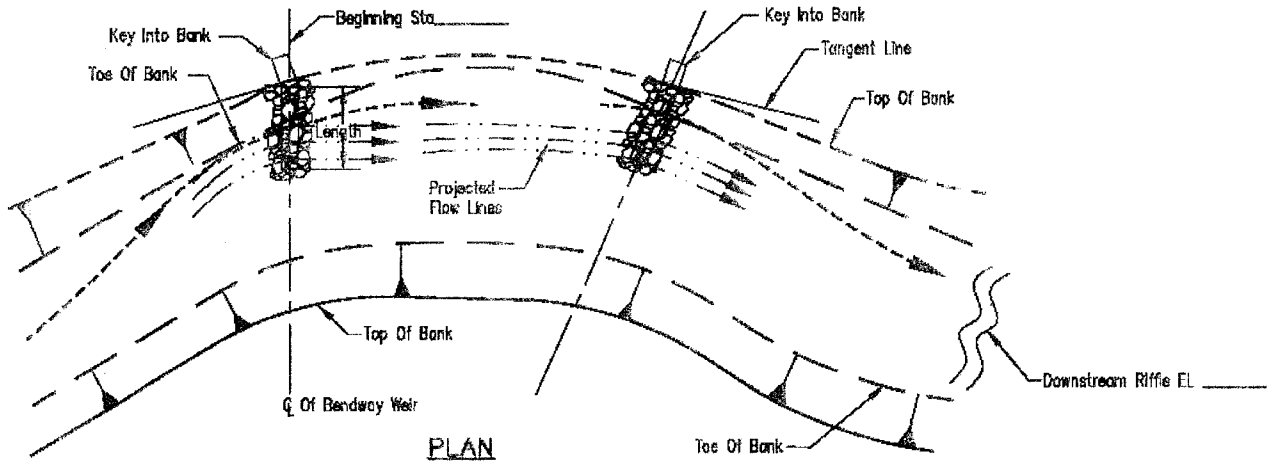

PLAN

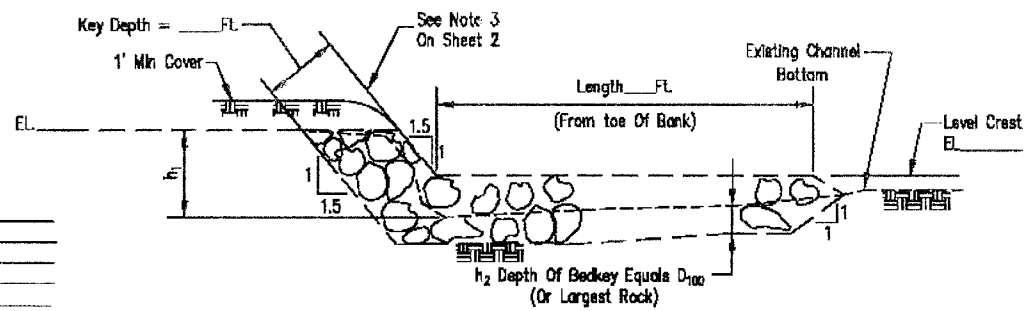

Benchmark EL
Description

Beginning Sta. Description

TYPICAL PROFILE, CENTERLINE OF BENDWAY WEIR

Landowner		Stream		Location	

NOT TO SCALE

STREAM BANK STABILIZATION
BENDWAY WEIR

NRCS

IL-ENG-151A

CEMVR-OD-P-2010-112
Bendway Weirs – Plan & Profile
Sheet 3 of 9

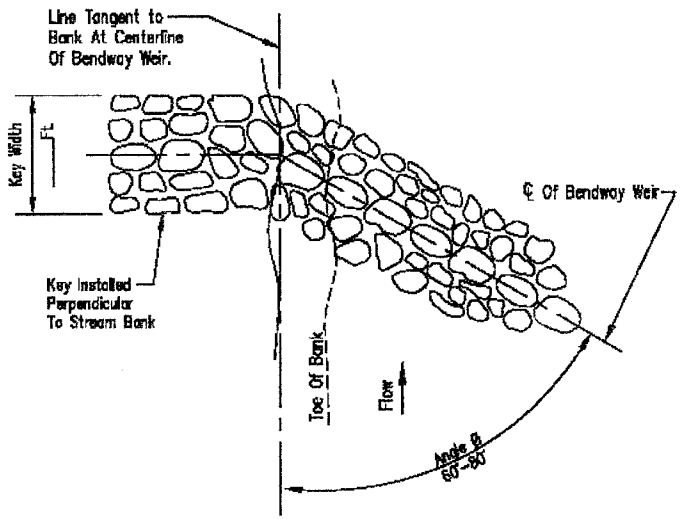

PLAN VIEW OF BENDWAY WEIR

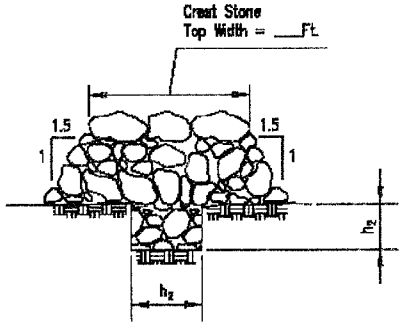

TYPICAL BENDWAY WEIR SECTION

Weir	*Bank	Station	Length	Crest Elev.	h_2	h_2	Angle	** Azimuth	Tone
1									
2									
3									
4									
5									
6									
7									
8									
9									
10									
11									
12									
13									
14									
15									
						Total Stone			

Notes:
1. **Azimuth is the compass reading from magnetic north along the centerline of weir.
2. *Bank–left side or right side looking downstream.
3. Key shall be constructed so that the vertical section remains embedded in the existing stream bank.
4. Rock gradation shall meet IDOT requirements for GRAD. NO.____ riprap, quality designation "A", or as designated by engineer.

REFERENCE TABLE		
GRAD. NO.	h_2 (D_{100})	D_{50}
4	1.3 ft	7.4 in
5	1.7 ft	9.8 in
6	2.0 ft	12.1 in
7	2.5 ft	14.6 in

Landowner		Stream		Location	

NOT TO SCALE

STREAM BANK STABILIZATION
BENDWAY WEIR

NRCS
Natural Resources Conservation Service
United States Department of Agriculture

File No. IL-ENG-151B
Drawing No.
Sheet 2 of 2

CEMVR-OD-P-2010-112
Bendway Weirs – Plan
Sheet 4 of 8

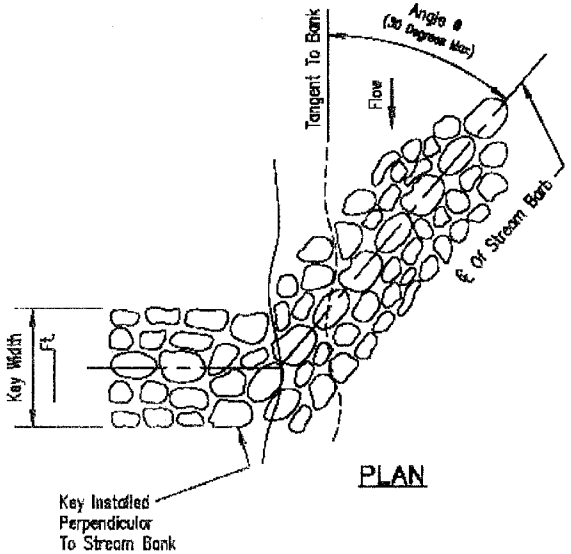

PLAN

Barb	*Bank	Station	Total Length Of Barb	Barb Control Elevation	h_1	h_2	h_3	Slope	Angle ϕ	** Azimuth	Tons
1											
2											
3											
4											
5											
6											
7											
8											
9											
10											
11											
12											
13											
14											
15											
								Total Stone			

Notes:

1. **Azimuth is the compass reading from magnetic north along the centerline of weir.
2. *Bank–left side or right side looking downstream.
3. Key shall be constructed so that the vertical section remains embedded in the existing stream bank.
4. Rock gradation shall meet IDOT requirements for GRAD. NO. ____ riprap, quality designation "A", or as designated by engineer.

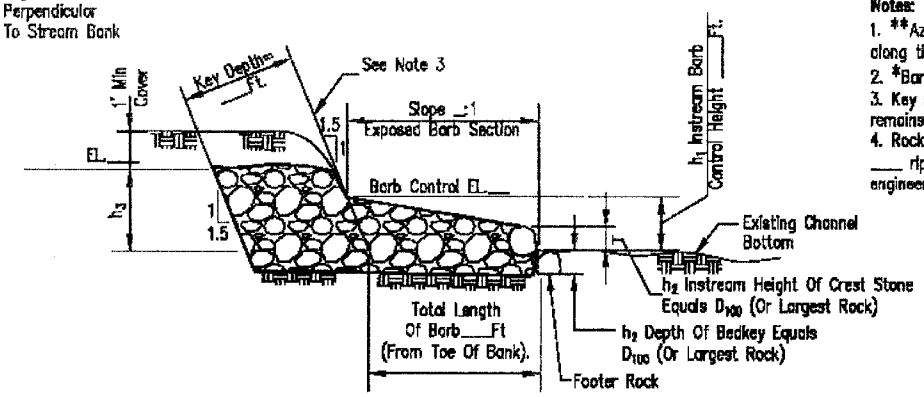

TYPICAL PROFILE,CENTERLINE OF STREAM BARB

NOT TO SCALE

REFERENCE TABLE		
GRAD. NO.	h_2 (D_{100})	D_{50}
4	1.3 ft	7.4 in
5	1.7 ft	9.8 in
6	2.0 ft	12.1 in
7	2.5 ft	14.6 in

Landowner		Stream		Location	

STREAM BANK STABILIZATION
STREAM BARB

NRCS

IL-ENG-166

CEMVR-OD-P-2010-112
Stream Barb – Plan & Section
Sheet 5 of 8

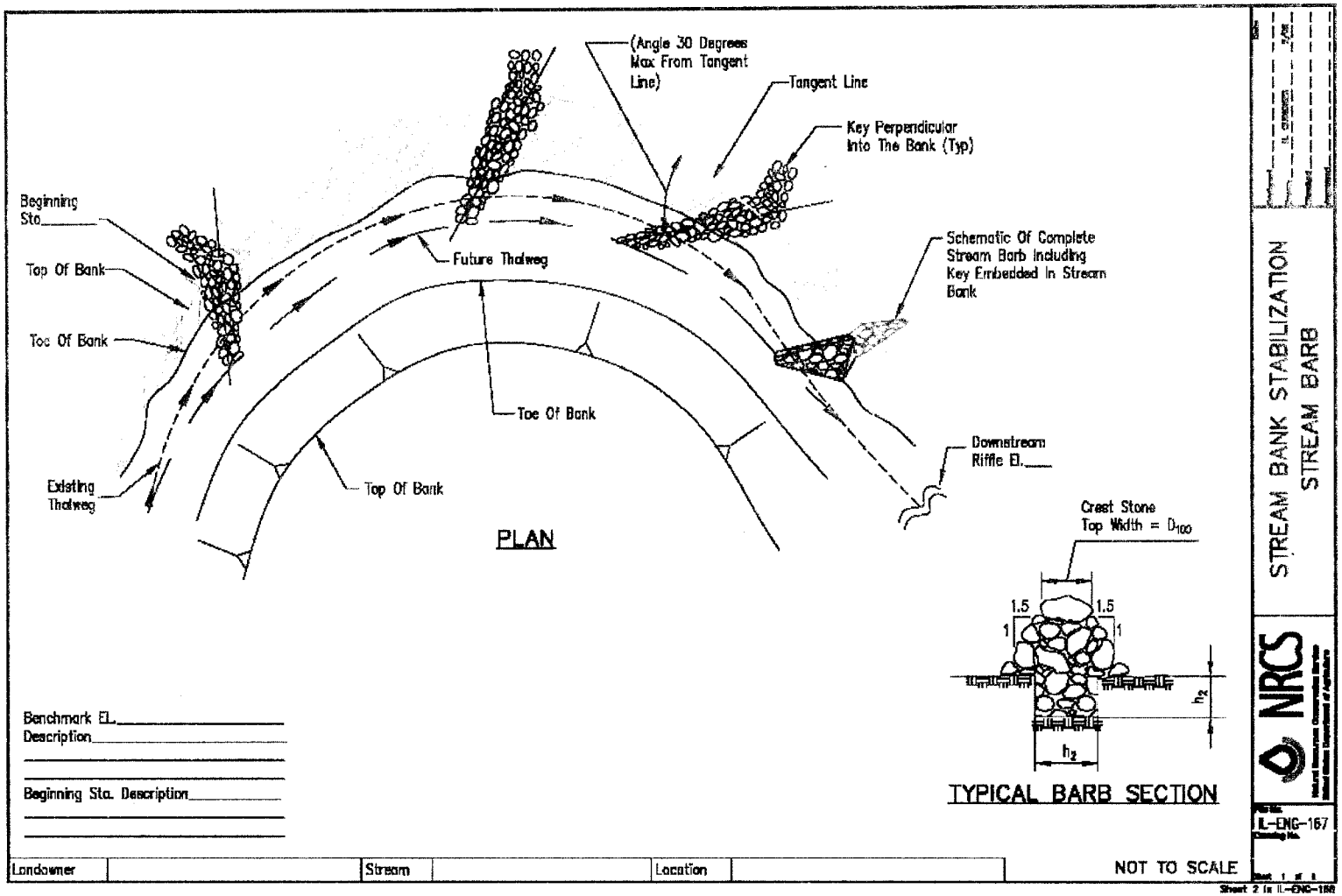

CEMVR-OD-P-2010-112
Stream Barb – Plan
Sheet 6 of 9

Benchmark EL._____
Description_____

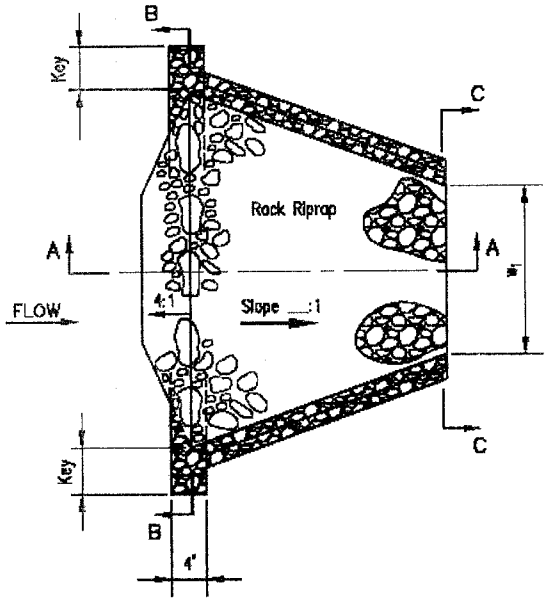

PLAN

($h_2 = h_1 + 0.5'$)

Riffle No.	Sta.	Control Elev.	h_1	h_2	h_3	h_4	W_1	Estimated Rock (Tons)
						Total Stone		

REFERENCE TABLE		
GRAD. NO.	h_4 D_{100}	D_{50}
4	1.3 ft	7.4 in.
5	1.7 ft	9.8 in.
6	2.0 ft.	12.1 in.
7	2.5 ft.	14.6 in.

NOTES:
1. Rock gradation shall meet IDOT requirement for GRAD. NO.____ riprap, quality designation "A", or as designated by engineer.
2. Use largest individual stones From available material as shown for the emergent boulders and crest stone.
3. Riffle slope shall be 20:1 or flatter where fish passage is required.

NOT TO SCALE

Landowner		Stream		Location	

STREAM BANK STABILIZATION
ROCK RIFFLE DETAILS

NRCS

Designed _____ Date _____
Drawn _____ M. SWANSON _____ 3/08
Checked _____
Approved _____

File No. IL-ENG-165A
Drawing No.
Sheet 1 of 2

CEMVR-OD-P-2010-112
Rock Riffle – Plan & Section
Sheet 7 of 8

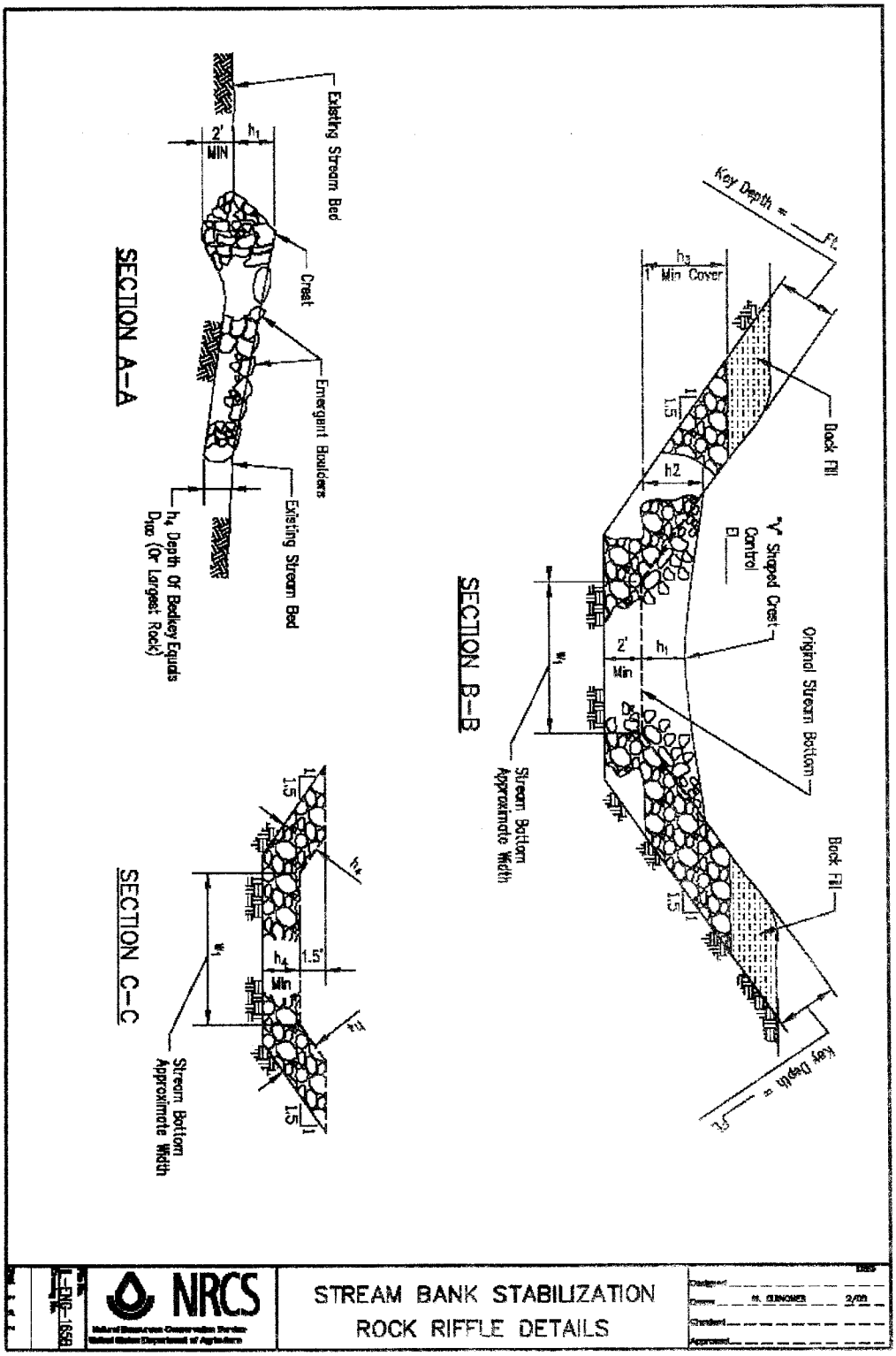

NRCS

STREAM BANK STABILIZATION
ROCK RIFFLE DETAILS

CEMVR-OD-P-2010-112
Rock Riffle – Sections
Sheet 8 of 8

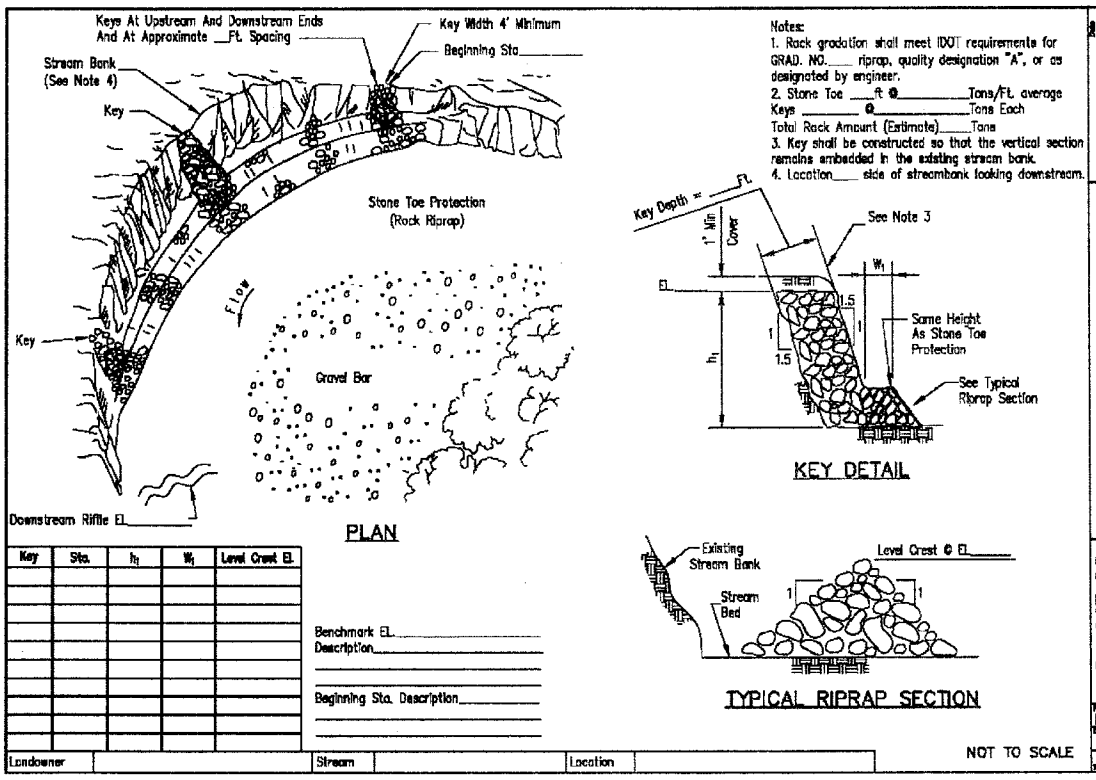

Key	Sta.	h_1	W_1	Level Crest El.

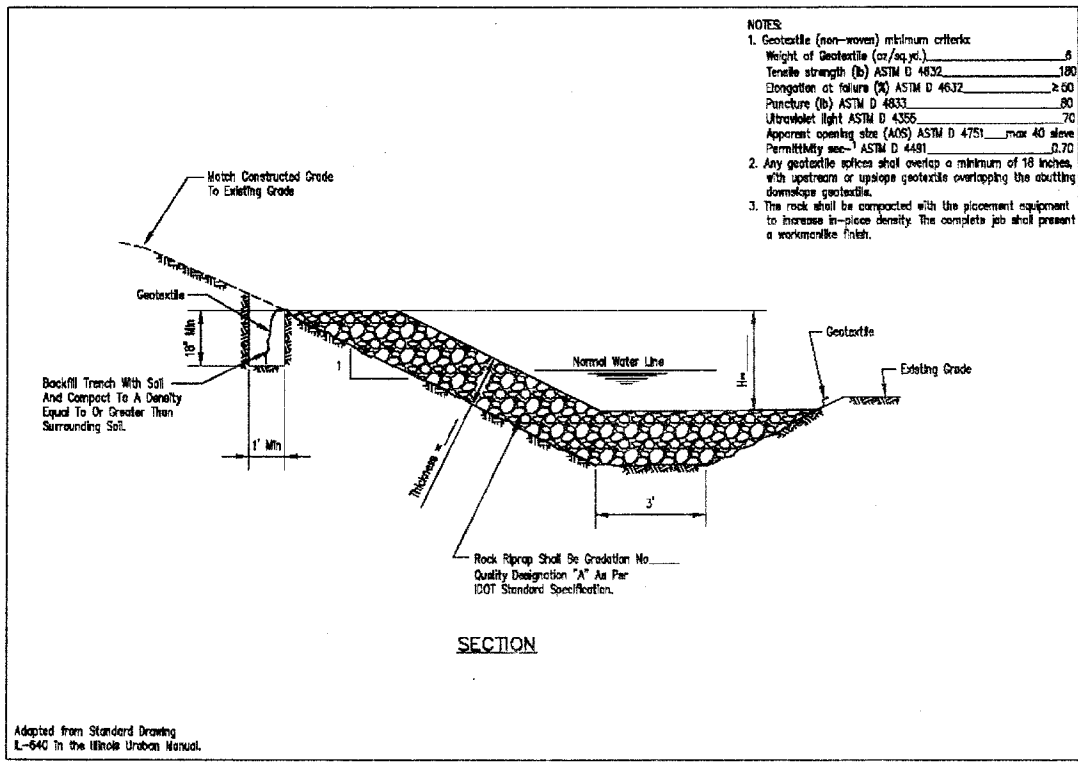

CEMVR-OD-P-2010-0112
Riprap and Stone Toe Protection
Sheet 1 of 2

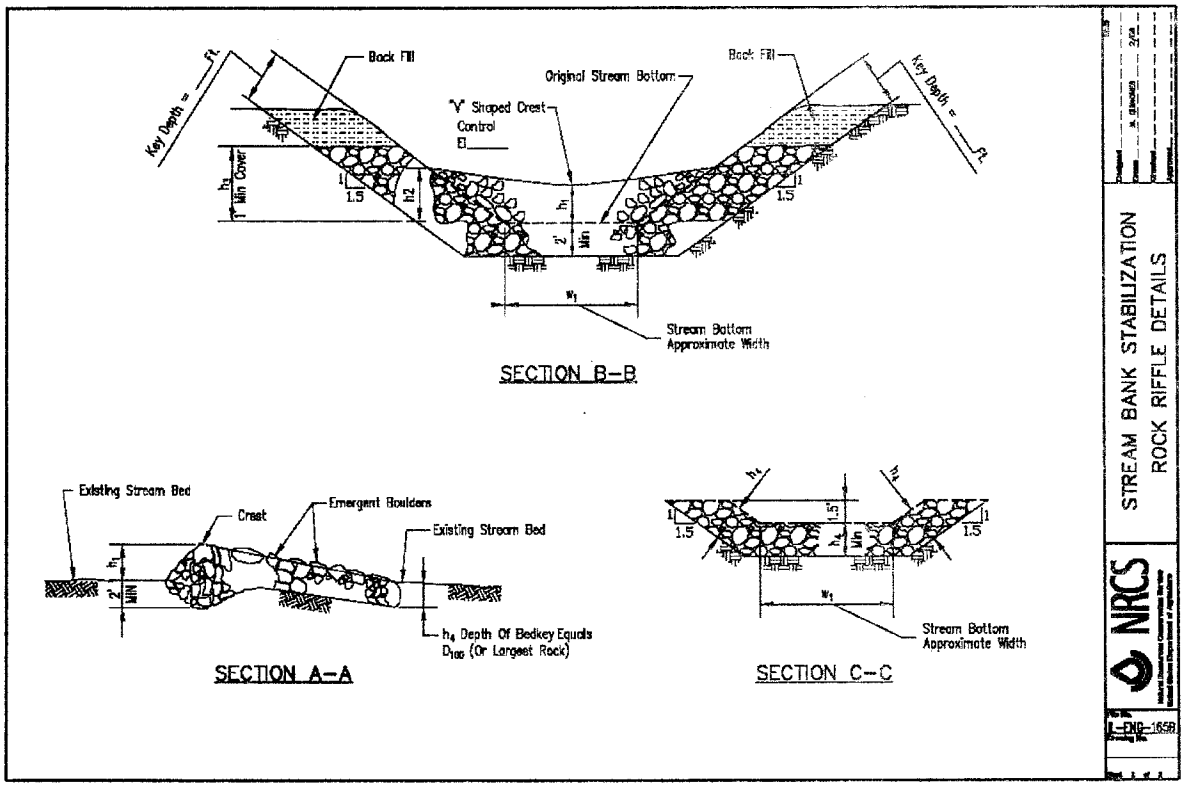

Benchmark EL._____
Description_____

($h_2 = h_1 + 0.5'$)

Riffle No.	Sta.	Control Elev.	h_1	h_2	h_3	h_4	W_1	Estimated Rock (Tons)
							Total Stone	

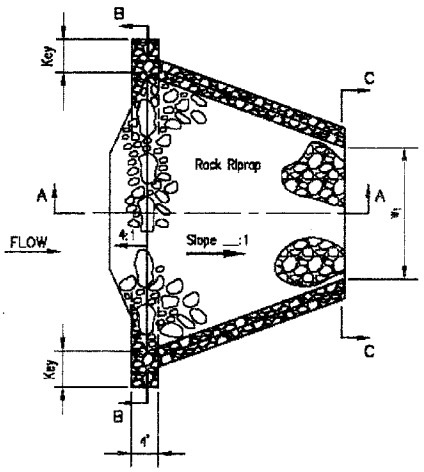

PLAN

REFERENCE TABLE		
GRAD. NO.	h_4 D_{100}	D_{50}
4	1.3 ft	7.4 in.
5	1.7 ft	9.8 in.
6	2.0 ft.	12.1 in.
7	2.5 ft.	14.8 in.

NOTES:
1. Rock gradation shall meet IDOT requirement for GRAD. NO.____ riprap, quality designation "A", or as designated by engineer.
2. Use largest individual stones From available material as shown for the emergent boulders and crest stone.
3. Riffle slope shall be 20:1 or flatter where fish passage is required.

Landowner		Stream		Location	

NOT TO SCALE

STREAM BANK STABILIZATION
ROCK RIFFLE DETAILS
NRCS
IL-ENG-165A

CEMVR-OD-P-2010-0112
Rock Riffles
Sheet 2 of 2