US Army Corps
of Engineers®

MONARCH-CHESTERFIELD LEVEE DISTRICT

PUMP STATION NO. 7 LEVEE RAISE
MISSOURI RIVER
ST. LOUIS COUNTY, MISSOURI

Solicitation: W912P9-13-R-0722

Contract: W912EE-XX-X-XXXX

AUGUST 2013

US Army Corps
of Engineers®

MARK	DESCRIPTION	DATE	APPR.	MARK	DESCRIPTION	DATE	APPR.

U.S. ARMY CORPS OF ENGINEERS
ST. LOUIS DISTRICT
ST. LOUIS, MO 63103

DESIGNED BY: JAMES A. MILLS, P.E.
DWN BY: LHW
CKD BY: DJR
SUBMITTED BY: GARY J. LEE, P.E.
PLOT SCALE: 1:1
PLOT DATE: N/A
SIZE: ANSI D
FILE NAME: MDCH12_G-001.dgn
DATE: AUGUST 2013
SOLICITATION NO.: W912P9-13-R-0722
CONTRACT NO.: CONTRACT NO.
FILE NUMBER: R0CU12

MONARCH-CHESTERFIELD LEVEE DISTRICT
PUMP STATION NO. 7 LEVEE RAISE
MISSOURI RIVER
ST. LOUIS COUNTY, MISSOURI
GENERAL
COVER SHEET

SHEET IDENTIFICATION
G-001

INDEX OF DRAWINGS

SHT	TITLE	TITLE	SHT	TITLE	SHT	TITLE
	GENERAL					
G-001	COVER SHEET					
G-002	INDEX OF DRAWINGS					
G-003	PROJECT LOCATION AND VICINITY MAPS					
G-004	GENERAL NOTES AND LEGEND					
	GEOTECHNICAL					
B-001	CLASSIFICATION LEGEND - SOIL AND ROCK					
B-201	BORING LOGS					
B-202	BORING LOGS					
	CIVIL					
C-101	GENERAL SITE PLAN					
C-102	CONSTRUCTION LIMITS PLAN					
C-103	REVETMENT ALIGNMENT GEOMETRY PLAN					
C-104	LEVEE ALIGNMENT GEOMETRY PLAN					
C-105	EXCAVATION PLAN					
C-106	FLOWABLE FILL COLUMNS PLAN					
C-107	GRADING PLAN					
C-201	PROFILE ALONG CENTER PIPE					
C-202	PROFILES - FLOWABLE FILL AND LEVEE RAISE					
C-301	LEVEE CROSS SECTIONS - STA. 0+00 TO STA. 150+00					
C-302	LEVEE CROSS SECTIONS - STA. 2+00 TO STA. 3+50					
C-303	LEVEE CROSS SECTIONS - STA. 4+00					
C-304	REVETMENT CROSS SECTIONS - STA. 0+00 TO STA. 0+40					
C-305	REVETMENT CROSS SECTIONS - STA. 0+50 TO STA. 2+00					
C-306	REVETMENT CROSS SECTIONS - STA. 2+50 TO STA. 3+40					
C-307	REVETMENT CROSS SECTIONS - STA. 3+50 TO STA. 4+50					
C-308	REVETMENT CROSS SECTIONS - STA. 4+70 TO STA. 5+00					
C-401	DETAIL PLAN - PUMP STATION DISCHARGE OUTFALL					
C-501	DETAILS					
	STRUCTURAL					
S-101	DEMOLITION PLAN					
S-501	DISCHARGE CELL DETAILS					
S-502	DISCHARGE CELL DETAILS					
	RESOURCE					
R-001	REFERENCE DRAWING					
R-002	REFERENCE DRAWING					
R-003	REFERENCE DRAWING					
R-004	REFERENCE DRAWING					
R-005	REFERENCE DRAWING					
R-006	REFERENCE DRAWING					
R-007	REFERENCE DRAWING					
R-008	REFERENCE DRAWING					
R-009	REFERENCE DRAWING					
R-010	REFERENCE DRAWING					

US Army Corps of Engineers®

MARK	DESCRIPTION	DATE	APPR.

MARK	DESCRIPTION	DATE	APPR.

U.S. ARMY CORPS OF ENGINEERS
ST. LOUIS DISTRICT
ST. LOUIS, MO 63103

DESIGNED BY: JAMES A. MILLS, P.E.
DWN BY: LHW
CKD BY: DJR
SUBMITTED BY: GARY J. LEE, P.E.
PLOT SCALE: 1:1
PLOT DATE: N/A
SIZE: ANSI D
FILE NAME: MDCH12_G-002.dgn
DATE: AUGUST 2013
SOLICITATION NO.: SOLICITATION NO.
CONTRACT NO.: CONTRACT NO.
FILE NUMBER: MDC-012

MONARCH-CHESTERFIELD LEVEE DISTRICT
PUMP STATION NO. 7 LEVEE RAISE
MISSOURI RIVER
ST. LOUIS COUNTY, MISSOURI

GENERAL
INDEX OF DRAWINGS

SHEET IDENTIFICATION
G-002

PROJECT LOCATION MAP

0 1000' 2000'

SCALE: 1" = 1000'

N

VICINITY MAP

APPROX. SCALE IN MILES

35 0 35 70

N

US Army Corps of Engineers®

MARK	DESCRIPTION	DATE	APPR.	MARK	DESCRIPTION	DATE	APPR.

U.S. ARMY CORPS OF ENGINEERS
ST. LOUIS DISTRICT
ST. LOUIS, MO 63103

DESIGNED BY: JAMES A. MILLS, P.E.
DWN BY: LHW
CKD BY: DJR
SUBMITTED BY: GARY J. LEE, P.E.
PLOT SCALE: 1:1
PLOT DATE:
SIZE: ANSI D
FILE NAME: MOCH12_G-003.dgn
DATE: AUGUST 2013
SOLICITATION NO.:
SOLICITATION NO.
CONTRACT NO.:
CONTRACT NO.
FILE NUMBER:
MOCH12

MONARCH-CHESTERFIELD LEVEE DISTRICT
PUMP STATION NO. 7 LEVEE RAISE
MISSOURI RIVER
ST. LOUIS COUNTY, MISSOURI
GENERAL
PROJECT LOCATION AND VICINITY MAPS

SHEET IDENTIFICATION
G-003

GENERAL NOTES:

1. HORIZONTAL DATUM IS MISSOUR STATE PLANE EAST ZONE (NAD83). VERTICAL DATUM IS NATIONAL GEODETIC VERTICAL DATUM ON 1988 (NAVD88). FOR HORIZONTAL AND VERTICAL CONTROL AND OTHER DETAILED INFORMATION RELATED TO THE TOPOGRAPHIC SURVEY, REFER TO SHEET R-010.
2. GRID LINES AND COORDINATES USED IN THESE DRAWINGS REFER TO THE MISSOURI STATE PLANE EAST ZONE COORDINATE SYSTEM. FOR ALIGNMENT, SEE PLAN AND PROFILE SHEETS.
3. ALL NORTH ARROWS SHOWN WITHIN THESE DRAWINGS REFER TO GRID NORTH, NOT MAGNETIC NORTH.
4. WORKING AREA AVAILABLE TO THE CONTRACTOR IS INDICATED BY THE CONTRACTOR'S CONSTRUCTION LIMITS. ANY ADDITIONAL AREAS NEEDED BY THE CONTRACTOR SHALL BE ACQUIRED BY THE CONTRACTOR AND AT HIS OWN EXPENSE.
5. SEE 00 80 00-23, ORDER AND COORDINATION OF WORK IN SPECS FOR REQUIRED CONSTRUCTION SEQUENCING, ETC.
6. A GEOTECHNICAL REPORT FOR THE SITE IS AVAILABLE TO THE CONTRACTOR UPON REQUEST.
7. THIS SET OF CONSTRUCTION DOCUMENTS SHALL BE CONSIDERED AS A WHOLE IN THAT THE GENERAL CONTRACTOR AND ALL THE SUB-CONTRACTORS ARE RESPONSIBLE FOR THE INFORMATION PRESENTED ON ALL SHEETS ON THE SET OF DRAWINGS AND ALL SECTIONS OF THE SPECIFICATIONS.
8. THE CONTRACTOR IS RESPONSIBLE FOR ERECTING ALL CONSTRUCTION FENCING AND BARRICADES AS REQUIRED TO PROTECT CONSTRUCTION MATERIAL AND TO PREVENT ANY UNAUTHORIZED PERSONNEL FROM ENTERING THE CONSTRUCTION SITE.
9. THE CONTRACTOR SHALL NOT DISTURB OR BLOCK ACCESS TO OTHER FACILITIES AND WORK AREAS THAT MAY BE ADJACENT TO THE SITE. DETOURS, WHEN REQUIRED, SHALL BE COORDINATED WITH THE CONTRACTING OFFICER. CONTRACTOR SHALL PROTECT ALL OTHER APPURTENANCES DURING CONSTRUCTION. ITEMS DAMAGED OR DESTROYED DURING CONSTRUCTION BY THE CONTRACTOR SHALL BE REPLACED AT NO ADDITIONAL COST TO THE GOVERNMENT. ANY DAMAGE TO THE EXISTING GROUNDS OR FACILITIES CAUSED BY CONSTRUCTION TRAFFIC OR ANY CONSTRUCTION OPERATION SHALL BE REPAIRED OR REPLACED BY THE CONTRACTOR TO MEET OR EXCEED EXISTING CONDITIONS AT NO ADDITIONAL COST TO THE GOVERNMENT.
10. ALL WORK NOTED AND LOCATED IN THESE DOCUMENTS SHALL BE UNDERSTOOD BY THE CONTRACTOR TO REQUIRE ALL NEW LABOR AND MATERIALS UNLESS SPECIFICALLY NOTED TO BE "EXISTING" , "BY OTHERS" OR "GOVERNMENT-FURNISHED".

GENERAL CROSS-REFERENCING SYMBOLS

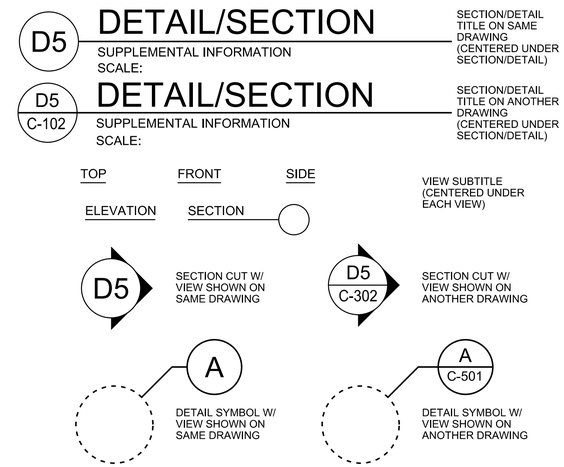

ABBREVIATIONS

* UNLESS OTHERWISE NOTED ON EACH SHEET

APPROX	APPROXIMATE	IF	INSIDE FACE
ALT W/	ALTERNATE WITH	LG	LONG
ALUM	ALUMINUM	LP	LOW POINT
BITUM	BITUMINOUS	L/W	LANDWARD
BOT	BOTTOM	MAX	MAXIMUM
C/L	CENTER LINE	MIN	MINIMUM
C&G	CURB & GUTTER	MIRR	MIRRORED
CLR	CLEAR	MISC	MISCELLANEOUS
CJ	CONSTRUCTION JOINT	NF	NEAR FACE
CMP	CORRUGATED METAL PIPE	NO	NUMBER
CONC	CONCRETE	OF	OUTSIDE FACE
		OC	ON CENTER
DIA	DIAMETER	R/W	RIVERWARD
DWG	DRAWING	SAN	SANITARY
EF	EACH FACE	SPEC	SPECIFICATIONS
EJ	EXPANSION JOINT	SST	STAINLESS STEEL
EL	ELEVATION	T&B	TOP AND BOTTOM
EW	EACH WAY	TYP	TYPICAL
EXIST	EXISTING	UNO	UNLESS NOTED OTHERWISE
FF	FAR FACE	UGND	UNDERGROUND
FES	FLARED END SECTION	W	WIDTH
GALV	GALVANIZED	WM	WATER MAIN
HP	HIGH POINT		
HT	HEIGHT		

GENERAL LEGEND

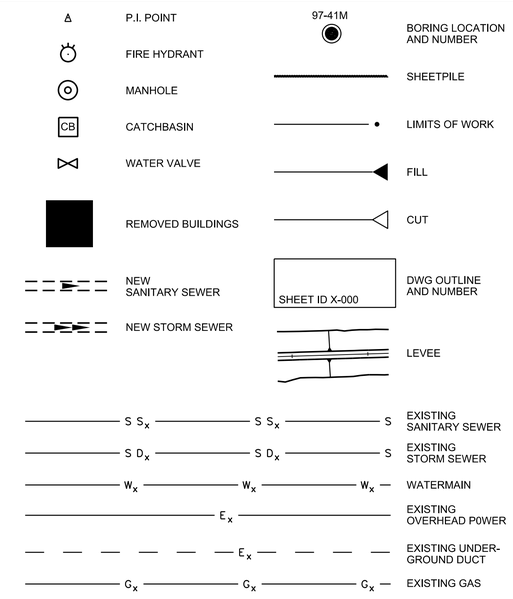

US Army Corps of Engineers®

MARK	DESCRIPTION	DATE	APPR.	MARK	DESCRIPTION	DATE	APPR.

U.S. ARMY CORPS OF ENGINEERS
ST. LOUIS DISTRICT
ST. LOUIS, MO 63103

DESIGNED BY: JAMES A. MILLS, P.E.
DATE: AUGUST 2013
DWN BY: LHW
CKD BY: DJR
SOLICITATION NO.: SOLICITATION NO.
SUBMITTED BY: GARY J. LEE, P.E.
CONTRACT NO.: CONTRACT NO.
PLOT SCALE: 1:1
PLOT DATE: As Noted
FILE NUMBER: MSC0412
SIZE: ANSI D
FILE NAME: MDCH12_G-004.dgn

MONARCH-CHESTERFIELD LEVEE DISTRICT
PUMP STATION NO. 7 LEVEE RAISE
MISSOURI RIVER
ST. LOUIS COUNTY, MISSOURI

GENERAL
GENERAL NOTES & LEGEND

SHEET IDENTIFICATION
G-004

auto_time

UNIFIED SOIL CLASSIFICATION ASTM D 2487

MAJOR DIVISION		TYPE	LETTER SYMBOL	SYMBOL	TYPICAL NAMES
COARSE-GRAINED SOILS More than half of material is larger than No. 200 sieve size	GRAVELS More than half of coarse fraction is larger than No. 4 sieve size	CLEAN GRAVEL (Little or No fines)	GW		GRAVEL, Well Graded, gravel-sand mixtures, little or no fines
			GP		GRAVEL, Poorly Graded, gravel-sand mixtures, little or no fines
		GRAVEL WITH FINES (Appreciable Amount of Fines)	GM		SILTY GRAVEL, gravel-sand-silt mixtures
			GC		CLAYEY GRAVEL, gravel-sand-clay mixtures
	SANDS More than half of coarse fraction is smaller than No. 4 sieve size	CLEAN SAND (Little or No fines)	SW		SAND, Well-Graded, gravelly sands
			SP		SAND, Poorly-graded, gravelly sands
		SAND WITH FINES (Appreciable Amount of Fines)	SM		SILTY SAND, sand-silt mixtures
			SC		CLAYEY SAND, sand-clay mixtures
FINE-GRAINED SOILS More than half the material is smaller than No. 200 sieve size		SILT AND CLAYS (Liquid Limit < 50)	ML		SILT & very fine sand, silty or clayey fine sand or clayey silt with slight plasticity
			CL		LEAN CLAY; Sandy Clay; Silty Clay; of low to medium plasticity
			OL		ORGANIC SILTS and organic silty clays of low plasticity
		SILT AND CLAYS (Liquid Limit > 50)	MH		SILT, fine sandy or silty soil with high plasticity
			CH		FAT CLAY, inorganic clay of high plasticity
			OH		ORGANIC CLAYS of medium to high plasticity, organic silts
HIGHLY ORGANIC SOILS			Pt		PEAT, and other highly organic soil
WOOD			Wd		WOOD
SHELLS			Sl		SHELLS

NOTE: Soil possessing characteristics of two groups are designated by combinations of group symbols

FIGURES TO LEFT OF BORING UNDER COLUMN "W OR D_{10}"

Are natural water content in percent dry weight (FW denotes Free Water) ASTM D 2216

When underlined denotes D_{10} size in mm - ASTM C 136 *

FIGURES TO LEFT OF BORING UNDER COLUMNS "LL" AND "PL"

Are liquid and plastic limits, respectively - ASTM D 4318

SYMBOLS TO LEFT OF BORING

- Groundwater surface and date observed
- Ⓒ Denotes location of consolidation test **
- Ⓢ Denotes location of consolidation-drained direct shear test **
- Ⓡ Denotes location of consolidation-undrained triaxial compression test **
- Ⓠ Denotes location of unconsolidation-undrained triaxial compression test **
- Ⓣ Denotes location of sample subjected to consolidation test and each of the above three types of shear tests **
- 5-50 Pressure Test Results Shown as 5 gals/min at 50 psi
- Denotes proposed channel grade

* The D_{10} size of a soil is the grain diameter in millimeters of which 10% of the soil is finer, and 90% coarser than size D_{10}- ASTM C 136.

** Results of these tests are available for inspection in the U.S. Army Engineer District Office, if these symbols appear beside the boring logs on the drawings.

FIGURES TO RIGHT OF BORING

Are values of cohesion in lbs./sq. ft. from unconfined compression tests

In parenthesis and not underlined are driving resistance in blows per foot determined with a standard split spoon sampler (1⅜" I.D., 2 " O.D.) and a 140 lb. driving hammer with a 30 " drop - ASTM D 1586. In parenthesis and underlined are for a 2 ½" I.D., 3 " O.D. split spoon sampler and 350 lb. driving hammer with an 18 " drop.

Where underlined with a solid line denotes laboratory permeability in centimeters per second of undisturbed sample.

Where underlined with a dashed line denotes laboratory permeability in centimeters per second of sample remolded to the estimated natural void ratio.

SYMBOLS TO RIGHT OF BORING

Ⓐ Denotes classification determined by process of drilling, no representative sample obtained.

CLASSIFICATION AND DESCRIPTION OF ROCK

GROUP	LETTER SYMBOL	SYMBOL	ROCK CLASSIFICATION
SEDIMENTARY ROCKS	CON		CONGLOMERATE
	SAN		SANDSTONE
	GRA		GRAYWACKE
	CLA		CLAYSTONE OR SILTSTONE
	SHA		COMPACTION SHALE
	CEM		CEMENTED SHALE
	COA		COAL
	LIM		LIMESTONE
	DOL		DOLOMITE
	CHA		CHALK (OR MARL)
	CT		CHERT
	CA		CAVITY
	GRN		GRANITE

PLASTICITY CHART

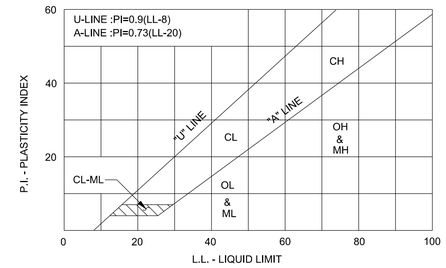

For classification of fine-grained soils
Reference: ASTM D 2487, Figure 3

BORING SUFFIX

LETTER SYMBOL	DESCRIPTION
A	Angle Core Boring
B	Bag Samples-Soil-Borings
C	Core Boring
O	Observation Boring
P	Piezometer
U	Undistrubed Sample-Soil-Boring

DESCRIPTIVE SYMBOLS

MODIFICATIONS

MODIFICATION	SYMBOL
Traces	Tr-
Fine	F
Very Fine	vF
Medium	M
Coarse	C
Calc. Concretions	cc
Rootlets	rt
Lignite fragments	lg
Shale fragments	shs
Sandstone fragments	sds
Shell fragments	slf
Organic matter	O
Clay strata or lenses	CS
Silt strata or lenses	SIS
Sand strata or lenses	SS
Sandy	S
Gravelly	G
Boulders	B
Slickensides	SL
Wood	Wd
Oxidized	Ox
Decomposed Limonite Concretions	DLC
Began use of drilling mud	B.D.M. →
Began use of casing	B.Ca. →
Beginning of Specified Core Size	NX Core →
Ground Surface Elev.	G.S.E.
Water Surface Elev.	W.S.E.

COLORS

COLOR	SYMBOL
TAN	T
YELLOW	Y
RED	R
BLACK	BK
GRAY	Gr
LIGHT GRAY	lGr
DARK GRAY	dGr
BROWN	Br
LIGHT BROWN	lBr
DARK BROWN	dBr
BROWNISH-GRAY	BRG
GRAYISH-BROWN	GYB
GREENISH-GRAY	GNG
GRAYISH-GREEN	Gyg
GREEN	Gn
BLUE	Bl
BLUE-GREEN	BLG
WHITE	Wh
MOTTLED	Mot
REDDISH	RD

CONSISTENCY FOR COHESIVE SOILS

CONSISTENCY	COHESION IN LBS./SQ.FT. FROM UNCONFINED COMPRESSION TEST	SYMBOL
VERY SOFT	< 250	vSo
SOFT	250-500	So
MEDIUM	500-1000	M
STIFF	1000-2000	St
VERY STIFF	2000-4000	vSt
HARD	> 4000	H

GENERAL NOTES :

WHILE THE BORINGS ARE REPRESENTATIVE OF SUBSURFACE CONDITIONS AT THEIR RESPECTIVE LOCATIONS AND FORTHEIR RESPECTIVE VERTICAL REACHES, LOCAL VARIATIONS CHARACTERISTIC OF THE SUBSURFACE MATERIALS OF THE REGION ARE ANTICIPATED AND, IF ENCOUNTERED, SUCH VARIATIONS WILL NOT BE CONSIDERED AS DIFFERING MATERIALLY WITHIN THE PURVIEW OF THE CONTRACT CLAUSE ENTITLED "DIFFERING SITE CONDITIONS."

GROUNDWATER ELEVATIONS SHOWN ON THE BORING LOGS REPRESENT GROUNDWATER SURFACE ENCOUNTERED IN SUCH BORINGS ON THE DATE SHOWN. ABSENCE OF WATER SURFACE DATA ON CERTAIN BORINGS INDICATES THAT NO GROUNDWATER DATA ARE AVAILABLE FROM THE BORING BUT DOES NOT NECESSARILY MEAN THAT GROUNDWATER WILL NOT BE ENCOUNTERED AT THE LOCATIONS OR WITHIN THE VERTICAL REACHES OF SUCH BORINGS. GROUNDWATER ELEVATION CAN VARY FROM THAT SHOWN ON THE LOGS WITH SEASONAL WEATHER CHANGES AND DEPENDING ON THE LENGTH OF TIME THE BORE HOLE IS LEFT OPEN.

CONSISTENCY OF COHESIVE SOIL SHOWN ON THE BORING LOGS IS BASED ON DRILLER'S LOG AND VISUAL EXAMINATION AND IS APPROXIMATE, EXCEPT WITHIN THOSE VERTICAL REACHES OF THE BORING WHERE SHEAR STRENGTHS FROM UNCONFINED COMPRESSION TESTS ARE SHOWN.

APPLICABLE PUBLICATIONS

AMERICAN SOCIETY FOR TESTING AND MATERIALS (ASTM) STANDARDS
ASTM C 136 METHOD FOR SIEVE ANALYSIS OF FINE AND COARSE AGGREGATES.
ASTM D 1586 METHOD FOR PENETRATION TEST AND SPLIT-BARREL SAMPLING OF SOILS.
ASTM D 2166 TEST METHODS FOR UNCONFINED COMPRESSIVE STRENGTH OF COHESIVE SOIL.
ASTM D 2216 METHOD FOR LABORATORY DETERMINATION OF WATER (MOISTURE) CONTENT OF SOIL, ROCK, AND SOIL-AGGREGATE MIXTURES.
ASTM D 2487 CLASSIFICATION OF SOILS FOR ENGINEERING PURPOSES.
ASTM D 2488 DESCRIPTION AND INDENTIFICATION OF SOILS (VISUAL-MANUAL PROCEDURE).
ASTM D 4318 TEST METHOD FOR LIQUID LIMIT, PLASTIC LIMIT, AND PLASTICITY INDEX OF SOILS.

U.S. ARMY ENGINEER MANUAL (EM)

EM 1110-2-1906
ENGINEERING AND DESIGN, LABORATORY
SOILS TESTING, 30 NOVEMBER 1970
REVISED 20 AUGUST 1986

DRILLING AND SAMPLING EQUIPMENT

AUG-AUGER
BKH-BACKHOE
CPT-CONE PENETROMETER
HDA-HAND AUGER
HSA-HOLLOW STEM AUGER
HSP-HAND SAMPLE PROBE
RB- ROLLER BIT
SSS-STANDARD SPLIT SPOON
VST-VACCUM SHELBY TUBE (5")
WB- WING BIT

US Army Corps of Engineers®

MARK	DESCRIPTION	DATE	APPR.	MARK	DESCRIPTION	DATE	APPR.

U.S. ARMY CORPS OF ENGINEERS
ST. LOUIS DISTRICT
ST. LOUIS, MO 63103

DESIGNED BY: C.WHEELER | DATE: AUGUST 2013
DWN BY: TJD | CKD BY: | SOLICITATION NO.: W912P8-13-R-0722
SUBMITTED BY: | CONTRACT NO.: CONTRACT NO.
PLOT SCALE: 1:1 | PLOT DATE: N/A | FILE NUMBER: MOCH12
SIZE: ANSI D | FILE NAME: MOCH12_B-001.dgn

MONARCH-CHESTERFIELD LEVEE DISTRICT
PUMP STATION NO. 7 LEVEE RAISE
MISSOURI RIVER
ST. LOUIS COUNTY, MISSOURI

GEOTECHNICAL
SOIL AND ROCK LEGEND

SHEET IDENTIFICATION
B-001

auto_time

NOTE: FOR BORING LOCATIONS, SEE SHEET C-101.

ELEVATION IN FEET N.A.V.D.

MCPS7-01-12

N 1029568.56 E 786804.75

12 DEC 12

G.S.E. 472.06

D60	D30	D10	Description
35	24	18	SILTY CLAY (CL-ML), about 100% fines, low plasticity; brown, moist, stiff to hard, low plasticity, with fill.
33	21		SILTY CLAY (CL-ML), about 100% fines, low plasticity; gray, moist, stiff, low plasticity.
27	22	23	
35	21		CLAYEY SILT (CL/ML), about 100% fines, low plasticity; gray, moist, medium stiff to very stiff, low plasticity.
33	24		
30	22		
NP	NP	21	
31	23		SILTY CLAY (CL-ML), about 100% fines, low plasticity; gray brown, moist, medium stiff to very stiff, low plasticity.
30	21	27	
29	20		
31	22		
28	21		
31	23		
32	21	27	
31	26		
NP	NP		
39	25	27	
35	24		
34	22	28	
0.211	0.153	0.089	
0.205	0.154	N/A	POORLY GRADED SAND WITH SILT (SP-SM), about 9.5% fines, no plasticity; about 90.5% sand, fine; gray, saturated, no plasticity.
50	19		
32	21		SILT (ML), about 90.6% fines, no plasticity; about 9.4% sand, fine; gray, saturated, soft, no plasticity.
30	21		FAT CLAY (CH), about 100% fines, high plasticity; gray, wet, soft, high plasticity.
33	22	41	
33	22		
51	20		
0.203	0.156	0.085	POORLY GRADED SAND WITH SILT (SP-SM), about 6.7% fines, no plasticity; about 93.3% sand, fine; gray, saturated, medium dense, no plasticity.
58	21		
54	19		
NP	NP		
NP	NP		FAT CLAY (CH), about 100% fines, high plasticity; gray, wet, soft, high plasticity.
0.168	0.109	N/A	
52	23	66	SILTY SAND (SM), about 12% fines, no plasticity; about 88% sand, fine; gray, saturated, medium dense, no plasticity.
NP	NP		
3.521	0.280	N/A	SILTY SAND WITH GRAVEL (SM), about 14.9% fines, no plasticity; about 48.8% sand, fine to coarse; about 36.3% gravel, fine; gray, saturated, very dense, no plasticity.
NP	NP		
NP	NP		
61	23	28	FAT CLAY (CH), about 100% fines, high plasticity; gray, wet, stiff, high plasticity, with sand strata or lenses.
55	23	35	
61	24	40	SANDY FAT CLAY (CH), high plasticity; gray, wet, stiff, high plasticity.
6.216	1.072	N/A	WELL GRADED GRAVEL WITH SILT AND SAND (GW-GM), about 10.3% fines, no plasticity; about 47.3% gravel, fine; about 42.4% sand, fine to coarse; gray, saturated, dense, no plasticity.
NP	NP		
40	18	27	LEAN CLAY (CL), about 100% fines, low plasticity; gray, wet, stiff, low plasticity.
9.257	2.016	0.113	POORLY GRADED GRAVEL WITH SILT AND SAND (GP-GM), about 9% fines, no plasticity; about 55.6% gravel, fine to coarse; about 35.4% sand, fine to coarse; gray, saturated, dense, no plasticity.
NP	NP		
83	25	43	SANDY FAT CLAY WITH GRAVEL (CH), high plasticity; gray brown, wet, hard, high plasticity.

REFUSAL 90.10

381.96

MCPS7-02-12

N 1029671.85 E 786757.25

05 DEC 12

G.S.E. 460.23

D60	D30	D10	Description
28	21	19	SILTY CLAY (CL-ML), about 100% fines, low plasticity; brown, moist, medium stiff to very stiff, low plasticity.
29	21		
29	24		
29	24		
NP	NP		
33	21	33	
31	21	34	FAT CLAY (CH), about 100% fines, high plasticity; brown, moist, medium stiff, high plasticity.
44	19		
0.101	N/A	N/A	SILTY CLAY (CL-ML), about 100% fines, low plasticity; brown, moist, soft to medium stiff, low plasticity.
0.101	N/A	N/A	
0.083	N/A	N/A	
0.169	0.117	0.080	SILTY SAND (SM), about 39.7% fines, no plasticity; about 60.3% sand, fine; brown, moist, loose, no plasticity.
0.152	0.108	0.077	POORLY GRADED SAND WITH SILT (SP-SM), about 7.5% fines, no plasticity; about 92.5% sand, fine; brown, moist, loose, no plasticity.
NP	NP		
0.104	N/A	N/A	SILTY SAND (SM), about 32.8% fines, no plasticity; about 67.2% sand, fine; brown, saturated, very loose, no plasticity.
NP	NP		
NP	NP		
0.242	0.161	0.088	POORLY GRADED SAND WITH SILT (SP-SM), about 6.3% fines, no plasticity; about 93.4% sand, fine; about 0.2% gravel, fine; gray brown, saturated, medium dense, no plasticity.
NP	NP		
NP	NP		
0.154	0.093	N/A	SILTY SAND (SM), about 17.6% fines, no plasticity; about 82.4% sand, fine; gray, saturated, medium dense, no plasticity.
NP	NP		
0.313	0.182	0.102	POORLY GRADED SAND (SP), about 4.3% fines, no plasticity; about 94.9% sand, fine to medium; about 0.8% gravel, fine; gray, saturated, medium dense, no plasticity.
NP	NP		
6.704	0.790	0.098	POORLY GRADED GRAVEL WITH SILT AND SAND (GP-GM), about 8.6% fines, no plasticity; about 46.1% gravel, fine to coarse; about 45.4% sand, fine to coarse; gray, saturated, very dense, no plasticity.
NP	NP		
9.428	0.899	N/A	WELL GRADED GRAVEL WITH SILT AND SAND (GW-GM), about 10.3% fines, no plasticity; about 49.3% gravel, fine to coarse; about 40.4% sand, fine to coarse; gray, saturated, very dense, no plasticity.
NP	NP		
59	23	31	FAT CLAY (CH), about 100% fines, high plasticity; gray, wet, very stiff, high plasticity.
1.294	0.521	0.242	POORLY GRADED SAND WITH GRAVEL (SP), about 2.2% fines, no plasticity; about 77.4% sand, fine to coarse; about 20.5% gravel, fine to coarse; gray, saturated, loose, no plasticity.
NP	NP		
69	26		SANDY FAT CLAY (CH), high plasticity; gray, saturated, stiff, high plasticity.
5.349	0.922	N/A	SILTY GRAVEL WITH SAND (GM), about 13.8% fines, no plasticity; about 43.4% gravel, fine; about 42.8% sand, fine to coarse; gray brown, saturated, very dense, no plasticity.
NP	NP	43	
3.236	1.379	N/A	
NP	NP		
7.162	0.928	N/A	SILTY GRAVEL WITH SAND (GM), about 18.7% fines, no plasticity; about 50% gravel, fine to coarse; about 31.4% sand, fine to coarse; gray, saturated, very dense, no plasticity.
NP	NP		
6.506	2.142	0.078	POORLY GRADED GRAVEL WITH SILT AND SAND (GP-GM), about 9.9% fines, no plasticity; about 52.5% gravel, fine to coarse; about 37.6% sand, fine to coarse; gray, saturated, medium dense, no plasticity.
NP	NP		

REFUSAL 80.80

379.43

MCPS7-03-13

N 1029759.92 E 786901.26

09 APR 13

G.S.E. 477.60

D60	D30	D10	Description
36	17		LEAN CLAY (CL), brown, dry to moist, medium stiff to very stiff.
31	22	18	
36	21		
28	19		FAT CLAY (CH), gray, moist, medium stiff.
53	23	27	LEAN CLAY (CL), gray, moist, medium stiff.
35	17	27	LEAN CLAY (CL), gray, moist, medium stiff.
37	19		
30	22		SILT (ML), gray, moist, medium stiff to very soft.
35	20	20	
36	24		SILT (ML), gray, moist, medium stiff.
31	24		
32	24	26	LEAN CLAY (CL), brown, moist, soft.
32	18		
29	18	28	
37	22		LEAN CLAY (CL), brown, moist, soft to medium stiff.
49	19	34	SILT (ML), brown, moist, soft to medium stiff.
37	25		FAT CLAY (CH), grayish brown, moist, soft to medium stiff, iron oxide staining.
72	23		
59	22	30	LEAN CLAY (CL), grayish brown, moist, soft to medium stiff.
0.710/13			
44	18		
0.162	0.113	0.084	LEAN CLAY (CL), brown, moist, soft.
0.163	0.115	0.084	POORLY GRADED SAND (SP), fine; tan, moist, loose.
NP	NP		
NP	NP		
0.149	0.102	0.079	POORLY GRADED SAND WITH SILT (SP-SM), fine; tan, moist, loose.
0.154	0.176	0.114	
NP	NP		POORLY GRADED SAND (SP), about 10% fines; fine; brown, saturated, medium dense.
0.182	0.151	0.082	POORLY GRADED SAND WITH SILT (SP-SM), fine; light brown, saturated, very dense.
NP	NP		
0.179	0.130	0.079	POORLY GRADED SAND WITH SILT (SP-SM), fine; light brown, saturated, very dense.
NP	NP		
0.523	0.222	0.111	POORLY GRADED SAND (SP), fine to medium; gray, saturated, dense.
NP	NP		
0.219	0.167	0.107	POORLY GRADED SAND (SP), fine; gray, saturated, medium dense.
NP	NP		
3.430	0.543	N/A	WELL GRADED SAND WITH SILT AND GRAVEL (SW-SM), fine to coarse; gray, saturated, dense.
NP	NP		
7.472	1.168	0.112	WELL GRADED GRAVEL WITH SILT AND SAND (GW-GM), fine to coarse; white gray, saturated, medium dense.
NP	NP		
8.958	1.197	0.097	WELL GRADED GRAVEL WITH SILT AND SAND (GW-GM), fine to coarse; white gray, saturated, very dense.
NP	NP		
5.389	0.687	0.083	WELL GRADED SAND WITH SILT AND GRAVEL (SW-SM), fine to coarse; gray, saturated, very dense.
NP	NP		
3.265	0.311	0.082	POORLY GRADED SAND WITH SILT AND GRAVEL (SP-SM), fine to coarse; gray, saturated, very dense, rock in shoe.
NP	NP		
0.825	N/A	N/A	CLAYEY GRAVEL WITH SAND (GC), gray, moist, medium dense.
34	21	20	
57	18	32	FAT CLAY (CH), brown, moist, medium dense.
			LIMESTONE, highly weathered.

REFUSAL 100.20

377.40 BOTTOM OF HOLE - REFUSAL.

US Army Corps of Engineers®

MARK	DESCRIPTION	DATE	APPR.	MARK	DESCRIPTION	DATE	APPR.

U.S. ARMY CORPS OF ENGINEERS
ST. LOUIS DISTRICT
ST. LOUIS, MO 63103

DESIGNED BY: C.WHEELER | DATE: AUGUST 2013
DWN BY: TJD | CKD BY: | SOLICITATION NO.: W912P8-13-R-0722
SUBMITTED BY: | CONTRACT NO.: CONTRACT NO.
PLOT SCALE: 1:1 | PLOT DATE: | FILE NUMBER: MCCH172
SIZE: ANSI D | FILE NAME: MCCH172_B-201.dgn

MONARCH-CHESTERFIELD LEVEE DISTRICT
PUMP STATION NO. 7 LEVEE RAISE
MISSOURI RIVER
ST. LOUIS COUNTY, MISSOURI

GEOTECHNICAL
BORING LOGS

SHEET IDENTIFICATION
B-201

auto_time

NOTE: FOR BORING LOCATIONS, SEE SHEET C-101.

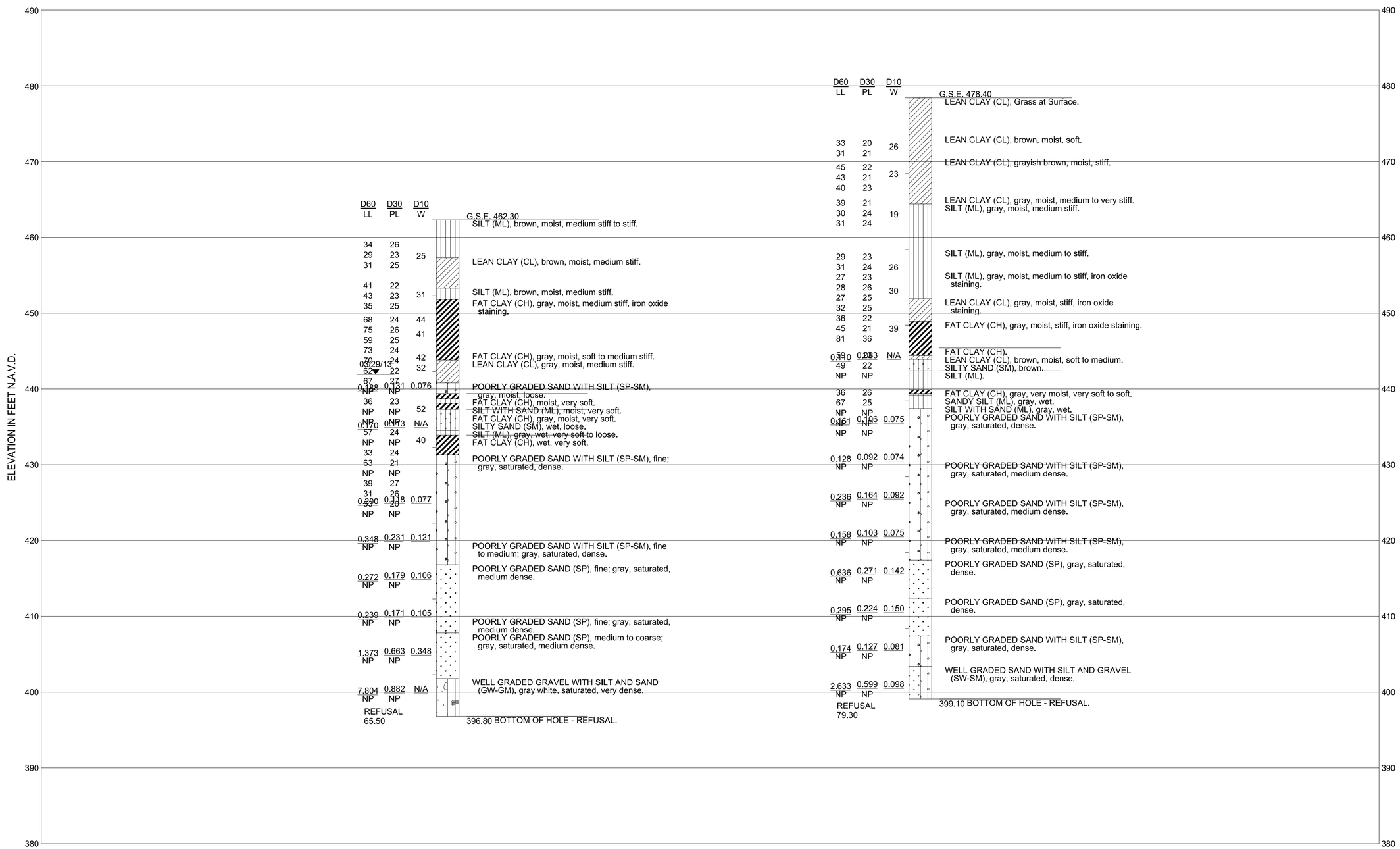

US Army Corps of Engineers®

MARK	DESCRIPTION	DATE	APPR.

MARK	DESCRIPTION	DATE	APPR.

U.S. ARMY CORPS OF ENGINEERS
ST. LOUIS DISTRICT
ST. LOUIS, MO 63103

DESIGNED BY: C.WHEELER
DWN BY: T.ID
CKD BY:
SUBMITTED BY:
PLOT SCALE: N/A
PLOT DATE: N/A
SIZE: ANSI D
FILE NAME: MOCH12_B-202.dgn
DATE: AUGUST 2013
SOLICITATION NO.: W912PS-13-R-0722
CONTRACT NO.: CONTRACT NO.
FILE NUMBER: MOCH12

MONARCH-CHESTERFIELD LEVEE DISTRICT
PUMP STATION NO. 7 LEVEE RAISE
MISSOURI RIVER
ST. LOUIS COUNTY, MISSOURI

GEOTECHNICAL
BORING LOGS

SHEET IDENTIFICATION
B-202

auto_time

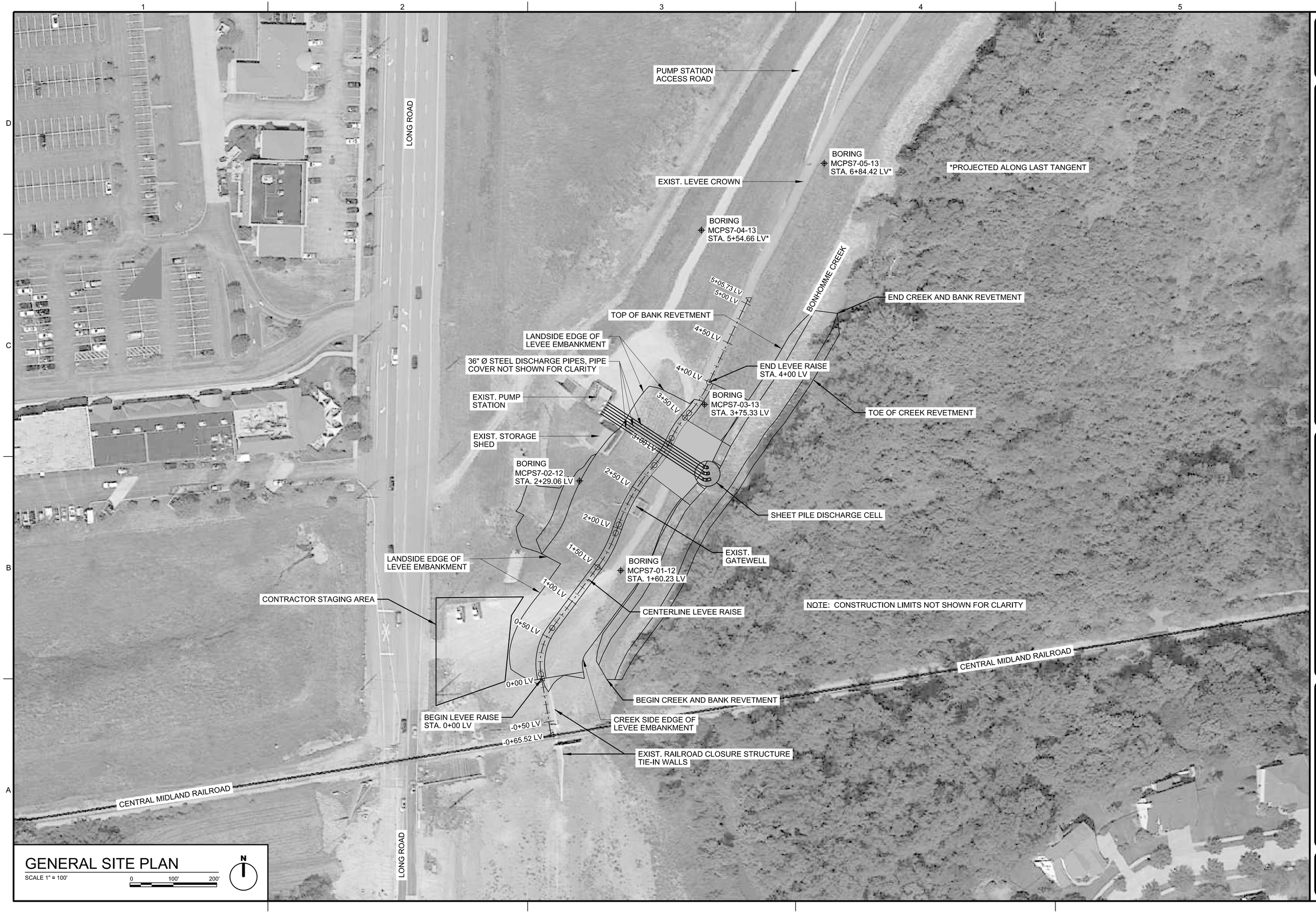

GENERAL SITE PLAN

SCALE 1" = 100'

0 100' 200'

US Army Corps of Engineers®

MARK	DESCRIPTION	DATE	APPR.	MARK	DESCRIPTION	DATE	APPR.

U.S. ARMY CORPS OF ENGINEERS
ST. LOUIS DISTRICT
ST. LOUIS, MO 63103

DESIGNED BY: JAMES A. MILLS, P.E.
DWN BY: LHW
CKD BY: DJR
SUBMITTED BY: GARY J. LEE, P.E.
PLOT SCALE: 1:1
PLOT DATE:
FILE NAME: MOCH12-C-101.dgn
SIZE: ANSI D
DATE: AUGUST 2013
SOLICITATION NO.: W912P8-13-R-0722
CONTRACT NO.: CONTRACT NO.
FILE NUMBER: MOCH12

MONARCH-CHESTERFIELD LEVEE DISTRICT
PUMP STATION NO. 7 LEVEE RAISE
MISSOURI RIVER
ST. LOUIS COUNTY, MISSOURI

CIVIL
GENERAL SITE PLAN

SHEET IDENTIFICATION
C-101

GENERAL SHEET NOTES:

1. CORDINATES LISTED ARE FOR MISSOURI STATE PLANE EAST COORDINATE SYSTEM.
2. TEMPORARY LAYDOWN AND STOCKPILE AREAS ARE ALLOWED WITHIN THE CONSTRUCTION LIMITS AND THE LOCATIONS SHALL BE IDENTIFIED AND SUBMITTED FOR GOVERNMENT APPROVAL AS PART OF THE CONTRACTOR'S TEMPORARY STOCKPILE AND STAGING AREA PLAN

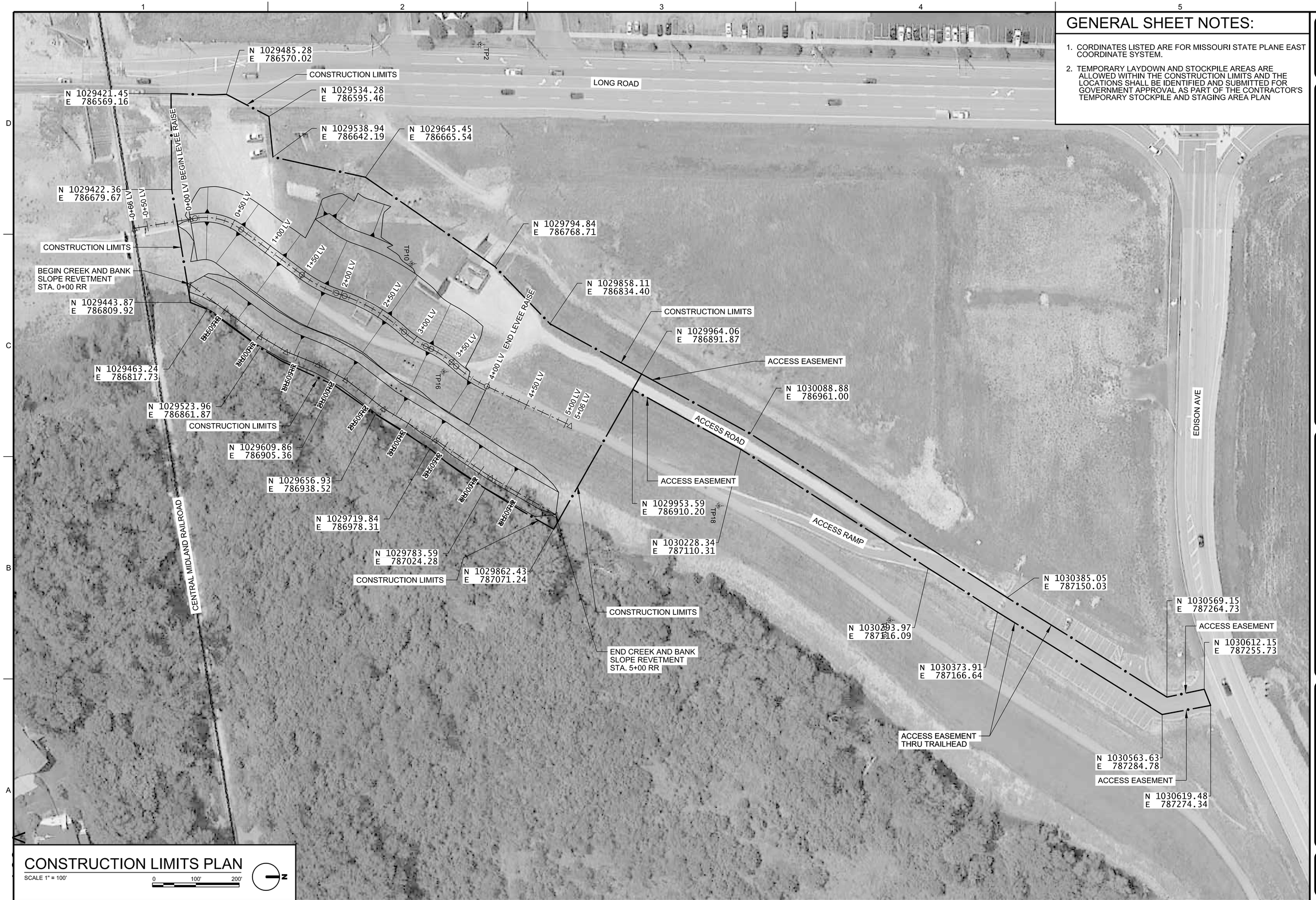

CONSTRUCTION LIMITS PLAN

SCALE 1" = 100'

0 100' 200'

N

US Army Corps of Engineers®

MARK	DESCRIPTION	DATE	APPR.	MARK	DESCRIPTION	DATE	APPR.

U.S. ARMY CORPS OF ENGINEERS
ST. LOUIS DISTRICT
ST. LOUIS, MO 63103

DESIGNED BY: JAMES A. MILLS, P.E.
DATE: AUGUST 2013
DWN BY: LHW
CKD BY: DJR
SOLICITATION NO.: W912P8-13-R-0722
SUBMITTED BY: GARY J. LEE, P.E.
CONTRACT NO.: CONTRACT NO.
PLOT SCALE: N/A
PLOT DATE: N/A
FILE NUMBER: MOC412
SIZE: ANSI D
FILE NAME: MOCH12_C-102.dgn

MONARCH-CHESTERFIELD LEVEE DISTRICT
PUMP STATION NO. 7 LEVEE RAISE
MISSOURI RIVER
ST. LOUIS COUNTY, MISSOURI

CIVIL
CONSTRUCTION LIMITS PLAN

SHEET IDENTIFICATION
C-102

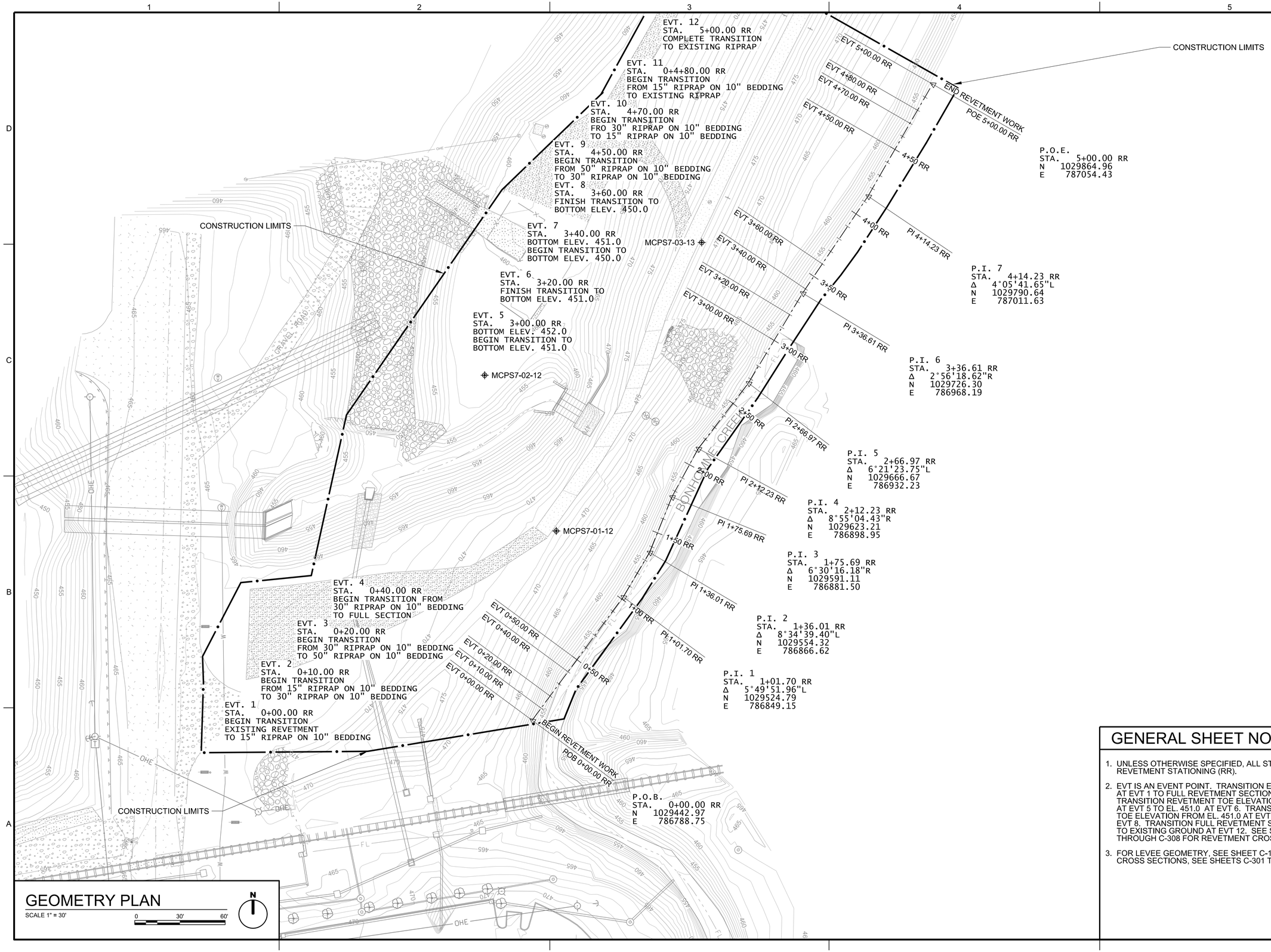

GEOMETRY PLAN

SCALE 1" = 30'

0 30' 60'

N

GENERAL SHEET NOTES

1. UNLESS OTHERWISE SPECIFIED, ALL STATIONING IS REVETMENT STATIONING (RR).
2. EVT IS AN EVENT POINT. TRANSITION EXISTING GROUND AT EVT 1 TO FULL REVETMENT SECTION AT EVT 4. TRANSITION REVETMENT TOE ELEVATION FROM EL. 452.0 AT EVT 5 TO EL. 451.0 AT EVT 6. TRANSITION REVETMENT TOE ELEVATION FROM EL. 451.0 AT EVT 7 TO EL. 450.0 AT EVT 8. TRANSITION FULL REVETMENT SECTION AT EVT 9 TO EXISTING GROUND AT EVT 12. SEE SHEETS C-304 THROUGH C-308 FOR REVETMENT CROSS SECTIONS.
3. FOR LEVEE GEOMETRY, SEE SHEET C-104. FOR LEVEE CROSS SECTIONS, SEE SHEETS C-301 THRU C-303.

US Army Corps of Engineers®

MARK	DESCRIPTION	DATE	APPR.	MARK	DESCRIPTION	DATE	APPR.

U.S. ARMY CORPS OF ENGINEERS
ST. LOUIS DISTRICT
ST. LOUIS, MO 63103

DESIGNED BY: JAMES A. MILLS, P.E.
DWN BY: LHW
CKD BY: DJR
SUBMITTED BY: GARY J. LEE, P.E.
PLOT SCALE: 1:1
PLOT DATE: N/A
SIZE: ANSI D
FILE NAME: MDCH12_C-103.dgn
DATE: AUGUST 2013
SOLICITATION NO.: W912P8-13-R-0722
CONTRACT NO.: CONTRACT NO.
FILE NUMBER: MDC-012

MONARCH-CHESTERFIELD LEVEE DISTRICT
PUMP STATION NO. 7 LEVEE RAISE
MISSOURI RIVER
ST. LOUIS COUNTY, MISSOURI

CIVIL
REVETMENT ALIGNMENT GEOMETRY PLAN

SHEET IDENTIFICATION
C-103

GENERAL SHEET NOTES

1. UNLESS OTHERWISE SPECIFIED, ALL STATIONING IS LEVEE STATIONING (LV).
2. FOR LEVEE GEOMETRY, SEE SHEET C-104.
3. FOR LEVEE CROSS SECTIONS, SEE SHEETS C-301 THROUGH C-303.
4. FOR REVETMENT CROSS SECTIONS, SEE SHEETS C-304 THROUGH C-308.

GEOMETRY PLAN

SCALE 1" = 30'

0 30' 60'

US Army Corps of Engineers®

MARK	DESCRIPTION	DATE	APPR.	MARK	DESCRIPTION	DATE	APPR.

U.S. ARMY CORPS OF ENGINEERS
ST. LOUIS DISTRICT
ST. LOUIS, MO 63103

DESIGNED BY: JAMES A. MILLS, P.E.
DATE: AUGUST 2013
DWN BY: LHW
CKD BY: DJR
SOLICITATION NO.: W912P9-13-R-0722
SUBMITTED BY: GARY J. LEE, P.E.
CONTRACT NO.:
PLOT SCALE: 1:1
PLOT DATE:
FILE NUMBER: MDCH12
SIZE: ANSI D
FILE NAME: MDCH12_C-104.dgn

MONARCH-CHESTERFIELD LEVEE DISTRICT
PUMP STATION NO. 7 LEVEE RAISE
MISSOURI RIVER
ST. LOUIS COUNTY, MISSOURI

CIVIL
LEVEE ALIGNMENT GEOMETRY PLAN

SHEET IDENTIFICATION
C-104

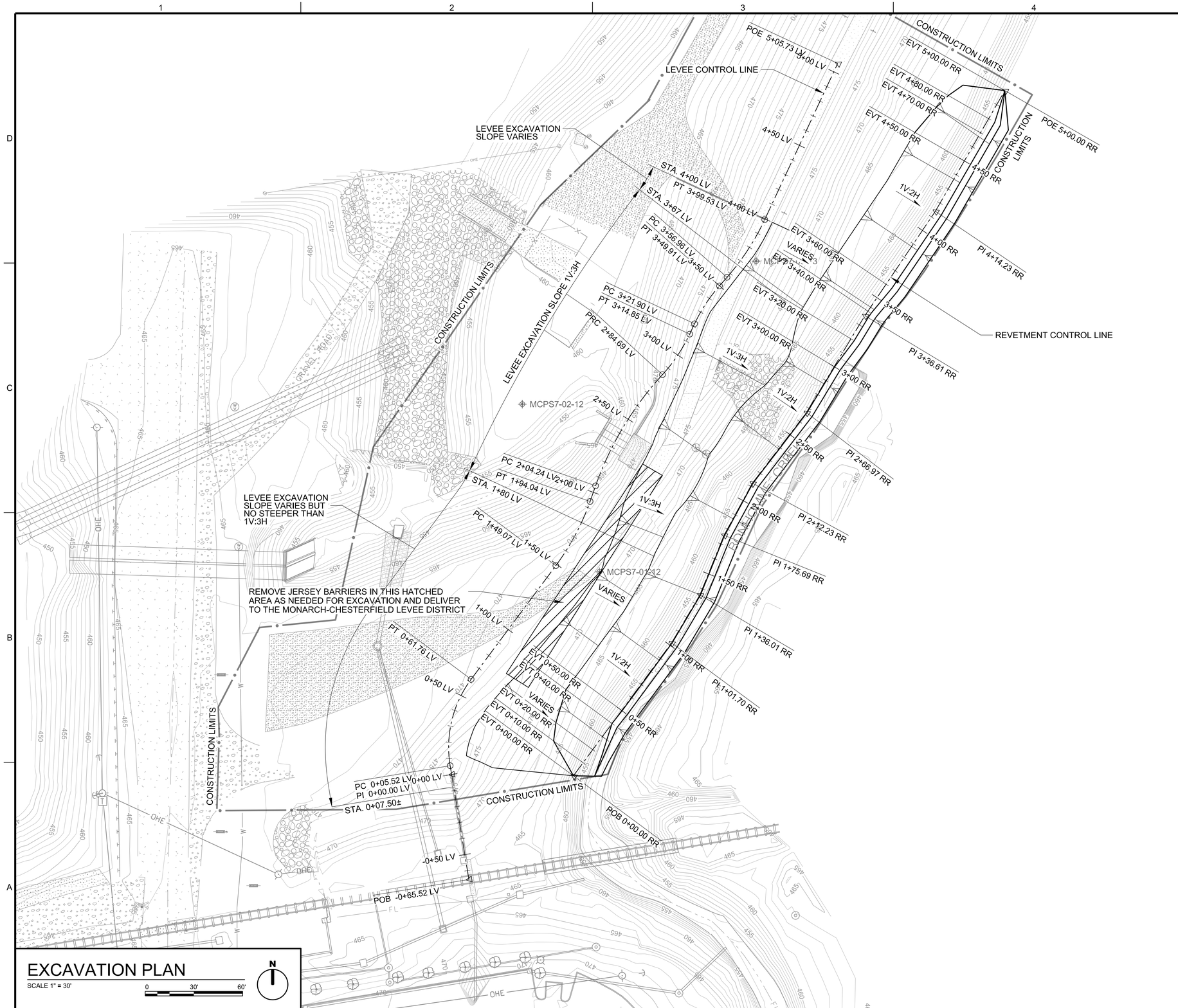

EXCAVATION PLAN

SCALE 1" = 30'

0 30' 60'

N

GENERAL SHEET NOTES

1. UNLESS OTHERWISE SPECIFIED, ALL STATIONING IS EITHER LEVEE STATIONING (LV) OR REVETMENT STATIONING (RR).
2. EXCAVATION SLOPES FOR THE LEVEE (1V:3H GENERALLY, BUT NO STEEPER THAN 1V:3H) ARE PERPENDICULAR TO THE LEVEE ALIGNMENT. EXCAVATION SLOPES FOR THE RIPRAP (1V:2H GENERALLY) ARE PERPENDICULAR TO THE RIPRAP ALIGNMENT.
3. SEE SHEETS C-301 THOUGH C-303 FOR LEVEE CROSS SECTIONS.
4. SEE SHEETS C-304 THROUGH C-308 FOR REVETMENT CROSS SECTIONS.
5. ALL JERSEY BARRIERS BETWEEN RAILROAD CLOSURE TIE-IN WALL AND GRAVITY DRAIN GATEWELL ARE TO BE REMOVED. THERE ARE APPROX. TWO ROWS OF JERSEY BARRIERS STACKED VERTICALLY, TWO HIGH, AND APPROX. 83 UNITS TOTAL WHICH ARE VISIBLE. CONCRETE JERSEY BARRIER DIMENSIONS ARE NOMINALLY 5' LONG BY 2.5' WIDE BY 2.5' DEEP.
6. EXCAVATION AT THE CREEK AND ON BANK SLOPE WILL REQUIRE REMOVAL OF EXISTING RIPRAP.

US Army Corps of Engineers®

MARK	DESCRIPTION	DATE	APPR.	MARK	DESCRIPTION	DATE	APPR.

U.S. ARMY CORPS OF ENGINEERS
ST. LOUIS DISTRICT
ST. LOUIS, MO 63103

DESIGNED BY: JAMES A. MILLS, P.E.
DWN BY: LHW
CKD BY: DJR
SUBMITTED BY: GARY J. LEE, P.E.
PLOT SCALE: 1:1
PLOT DATE:
SIZE: ANSI D
DATE: AUGUST 2013
SOLICITATION NO.: W912P9-13-R-0722
CONTRACT NO.: CONTRACT NO.
FILE NUMBER: MDC4172
FILE NAME: MDCH12_C-105.dgn

MONARCH-CHESTERFIELD LEVEE DISTRICT
PUMP STATION NO. 7 LEVEE RAISE
MISSOURI RIVER
ST. LOUIS COUNTY, MISSOURI

CIVIL
EXCAVATION PLAN

SHEET IDENTIFICATION
C-105

FLOWABLE FILL COLUMNS ELEVATIONS

COLUMN PANEL NUMBER	EXISTING GROUND ELEVATION	TOP OF COLUMN
P1	476.14	474.00
P2	475.39	473.00
P3	474.66	472.50
P4	474.10	472.00
P5	473.63	471.50
P6	473.23	471.00
P7	472.98	470.50
P8	472.81	470.50
P9	472.68	470.50
P10	472.57	470.50
P11	472.41	470.00
P12	472.21	470.00
P13	472.23	470.00
P14	472.32	470.00
P15	472.55	470.50
P16	472.78	470.50
P17	473.01	471.00
P18	473.25	471.00
P19	473.50	471.50
P20	473.68	471.50
P21	473.93	471.50
P22	474.25	472.00
P23	474.57	472.50
P24	474.89	472.50
P25	475.29	473.00
P26	475.91	473.50
P27	476.53	474.50
P28	477.15	475.00

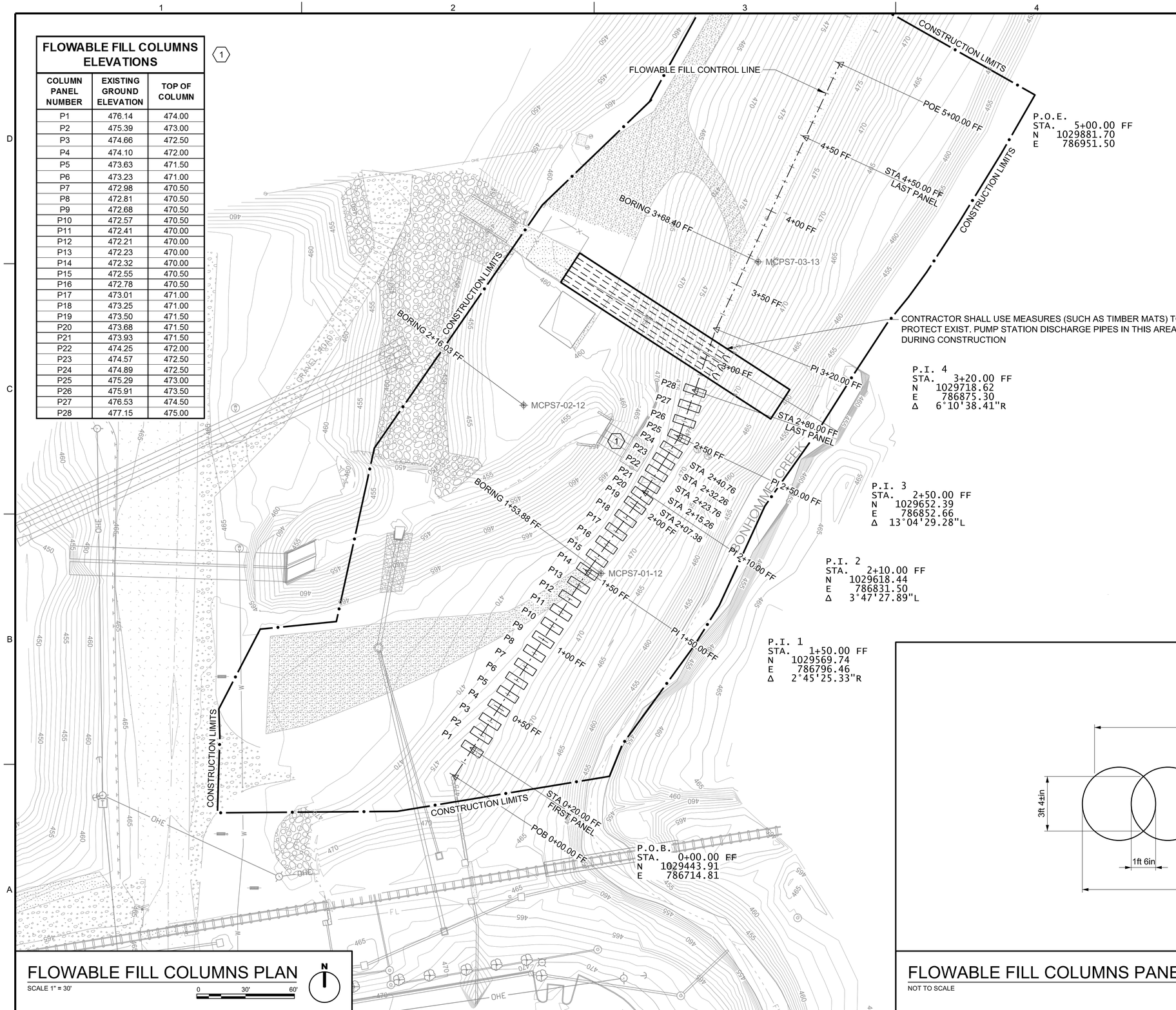

FLOWABLE FILL COLUMNS PLAN

SCALE 1" = 30'

0 30' 60'

N

GENERAL SHEET NOTES

1. UNLESS OTHERWISE SPECIFIED, ALL STATIONING IS FLOWABLE FILL COLUMNS PANEL STATIONING (FF).
2. EXCEPT FOR PANELS P20 THROUGH P24, ALL PANELS SHALL BE CENTERED AT 10' INTERVALS BEGINNING WITH STATION 0+20 AND ENDING WITH STATION 2+80.
3. EXISTING LEVEE MAY BE DEGRADED APPROX. 2' TO INSTALL FLOWABLE FILL COLUMNS. CONTRACTOR SHALL INCLUDE DEGRADE DETAILS IN THE CONTRACTOR'S EXCAVATION PLAN AND SUBMIT FOR GOVERNMENT APPROVAL.

SHEET KEYNOTES

1. BOTTOM ELEV. OF COLUMN PANELS P23 AND P22 IS EL. 459.0. BOTTOM ELEV. OF ALL OTHER COLUMN PANELS IS EL. 430.0

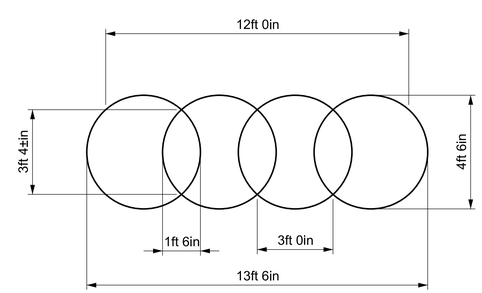

FLOWABLE FILL COLUMNS PANEL DETAIL

NOT TO SCALE

US Army Corps of Engineers®

MARK	DESCRIPTION	DATE	APPR.	MARK	DESCRIPTION	DATE	APPR.

U.S. ARMY CORPS OF ENGINEERS
ST. LOUIS DISTRICT
ST. LOUIS, MO 63103

DESIGNED BY: JAMES A. MILLS, P.E.
DATE: AUGUST 2013
DWN BY: LHW
CKD BY: DJR
SOLICITATION NO.: W912P8-13-R-0722
SUBMITTED BY: GARY J. LEE, P.E.
CONTRACT NO.: CONTRACT NO.
PLOT SCALE: 1:1
PLOT DATE:
FILE NUMBER: MDCH12
SIZE: ANSI D
FILE NAME: MDCH12_C-106.dgn

MONARCH-CHESTERFIELD LEVEE DISTRICT
PUMP STATION NO. 7 LEVEE RAISE
MISSOURI RIVER
ST. LOUIS COUNTY, MISSOURI

CIVIL
FLOWABLE FILL COLUMNS PLAN

SHEET IDENTIFICATION
C-106

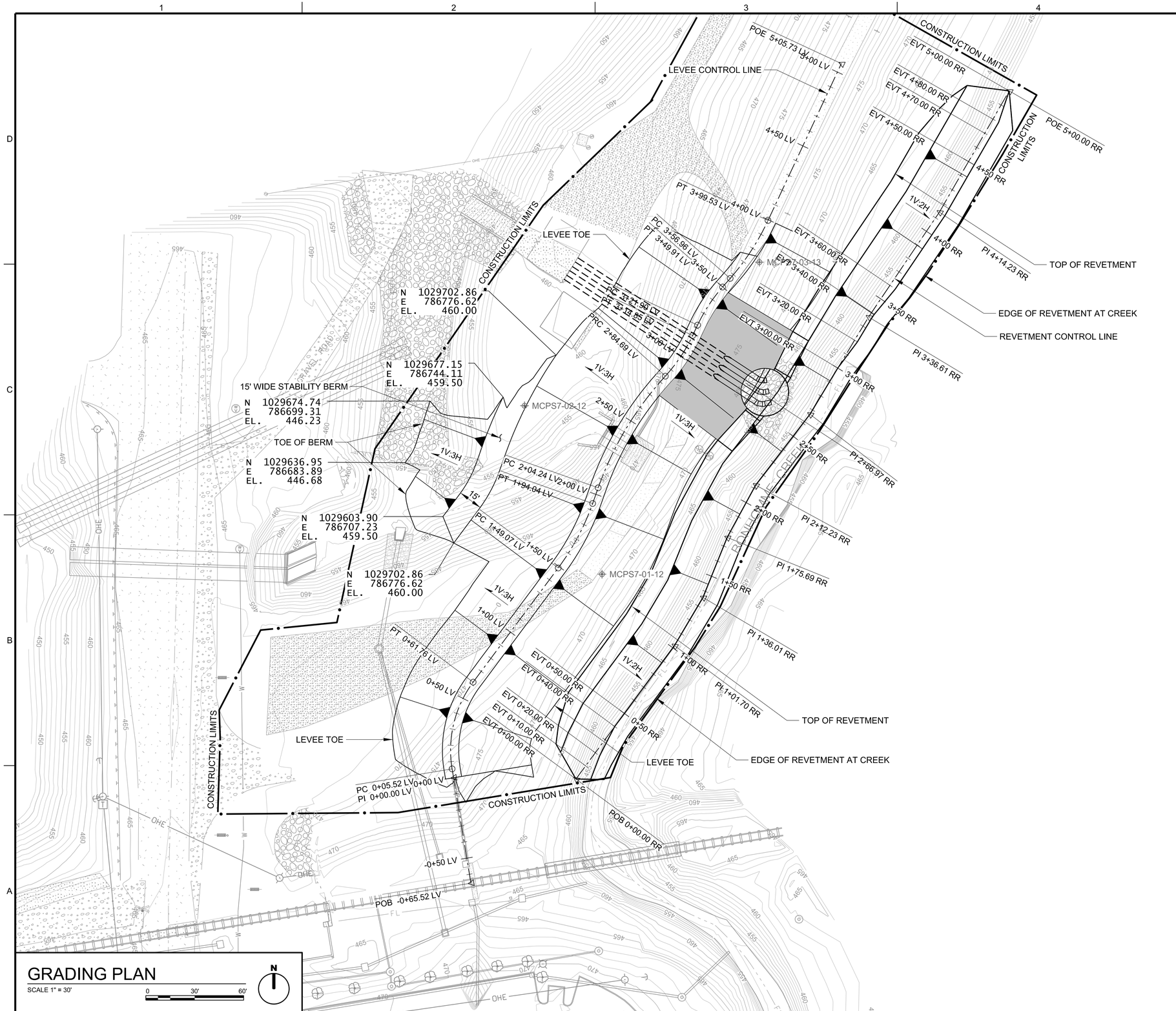

GRADING PLAN

SCALE 1" = 30'

0 30' 60'

N

GENERAL SHEET NOTES

1. UNLESS OTHERWISE SPECIFIED, ALL STATIONING IS EITHER LEVEE STATIONING (LV) OR REVETMENT STATIONING (RR).
2. FOR EXCAVATION PLAN, SEE SHEET C-105.
3. SEE SHEETS C-301 THROUGH C-303 FOR LEVEE CROSS SECTIONS.
4. SEE SHEETS C-304 THROUGH C-308 FOR REVETMENT CROSS SECTIONS.
5. SEE SHEET C-401 FOR DETAILS AT DISCHARGE PIPE OUTFALL, SHEET PILE CELL, AND EROSION CONTROL MAT

US Army Corps of Engineers®

MARK	DESCRIPTION	DATE	APPR.	MARK	DESCRIPTION	DATE	APPR.

U.S. ARMY CORPS OF ENGINEERS
ST. LOUIS DISTRICT
ST. LOUIS, MO 63103

DESIGNED BY: JAMES A. MILLS, P.E.
DATE: AUGUST 2013
DWN BY: LHW
CKD BY: DJR
SOLICITATION NO.: W912P9-13-R-0722
SUBMITTED BY: GARY J. LEE, P.E.
CONTRACT NO.: CONTRACT NO.:
PLOT SCALE: 1:1
PLOT DATE: No Date
FILE NUMBER: MOCH12
SIZE: ANSI D
FILE NAME: MOCH12_C-107.dgn

MONARCH-CHESTERFIELD LEVEE DISTRICT
PUMP STATION NO. 7 LEVEE RAISE
MISSOURI RIVER
ST. LOUIS COUNTY, MISSOURI

CIVIL
GRADING PLAN

SHEET IDENTIFICATION
C-107

GENERAL SHEET NOTES

1. FOR LEVEE PLAN SEE SHEET C-405.
2. ALL SLOPES AND DIMENSIONS SHOWN APPLY TO THIS SHEET AND ARE TYPICAL UNLESS OTHERWISE NOTED. ON CREEK SIDE, FLATTEN LEVEE SLOPE TO LESS THAN 1V ON 3H TO MEET BOTTOM OF BEDDING MATERIAL AT EL. 464.0.
3. SEE LEVEE REVETMENT CROSS SECTIONS ON SHEETS C-305 THROUGH C-308. THICKNESS AND TOP SLOPE OF RIPRAP LAYER AT SHEET PILE CELL INCREASE BEYOND TYPICAL REVETMENT DETAIL, SEE SHEET C-107.
4. BOLLARDS NOT SHOWN FOR CLARITY. SEE SHEET C-401 FOR BOLLARD LOCATIONS, AND SHEET C-501 FOR TYPICAL BOLLARD DETAIL.

SHEET KEYNOTES

1. LOCATION OF SPLICE BETWEEN EXISTING AND NEW PIPE. CUT EXISTING DUCTILE IRON PIPE TO CREATE TRUE PLAIN END. SPLICE TO BE MADE WITH A RESTRAINED DUCTILE IRON PIPE MECHANICAL JOINT. SEE SPECIFICATION SECTION 33 05 15 PARAGRAPH 2.3 AND PARAGRAPH 3.1.3 FOR DETAILS.
2. DUCTILE IRON PIPE ANSI CLASS 125 FLANGE TO STEEL PIPE AWWA C207 FLANGE JOINT.

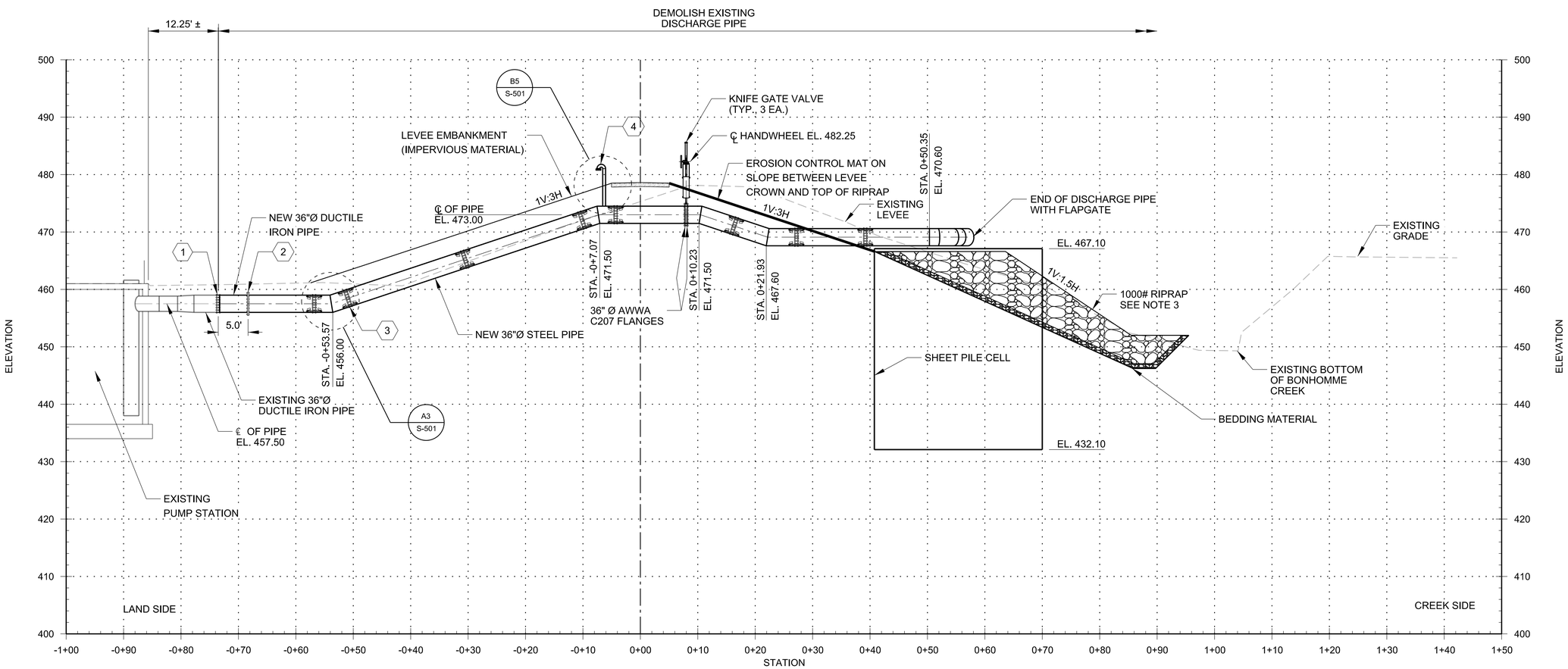

PROFILE ALONG CENTER PIPE

SCALE 1" = 20'

0 10' 20' 40'

US Army Corps of Engineers®

MARK	DESCRIPTION	DATE	APPR.

MARK	DESCRIPTION	DATE	APPR.

U.S. ARMY CORPS OF ENGINEERS
ST. LOUIS DISTRICT
ST. LOUIS, MO 63103

DESIGNED BY: JAMES A. MILLS, P.E.
DWN BY: K. HANNAH
CKD BY: DJR
SUBMITTED BY: GARY J. LEE, P.E.
PLOT SCALE:
PLOT DATE:
SIZE: ANSI D
FILE NAME: MDCH12_C-201.dgn
DATE: AUGUST 2013
SOLICITATION NO.: W912P9-13-R-0722
CONTRACT NO.:
CONTRACT NO.
FILE NUMBER: MDCH12

MONARCH-CHESTERFIELD LEVEE DISTRICT
PUMP STATION NO. 7 LEVEE RAISE
MISSOURI RIVER
ST. LOUIS COUNTY, MISSOURI

CIVIL
PROFILE ALONG CENTER PIPE

SHEET IDENTIFICATION
C-201

GENERAL SHEET NOTES

1. FOR LEVEE PLAN SEE SHEET C-405.
2. ALL SLOPES AND DIMENSIONS SHOWN APPLY TO THIS SHEET AND ARE TYPICAL UNLESS OTHERWISE NOTED. ON CREEK SIDE, FLATTEN LEVEE SLOPE TO LESS THAN 1V ON 3H TO MEET BOTTOM OF BEDDING MATERIAL AT EL. 464.0.
3. SEE LEVEE REVETMENT CROSS SECTIONS ON SHEETS C-305 THROUGH C-308.

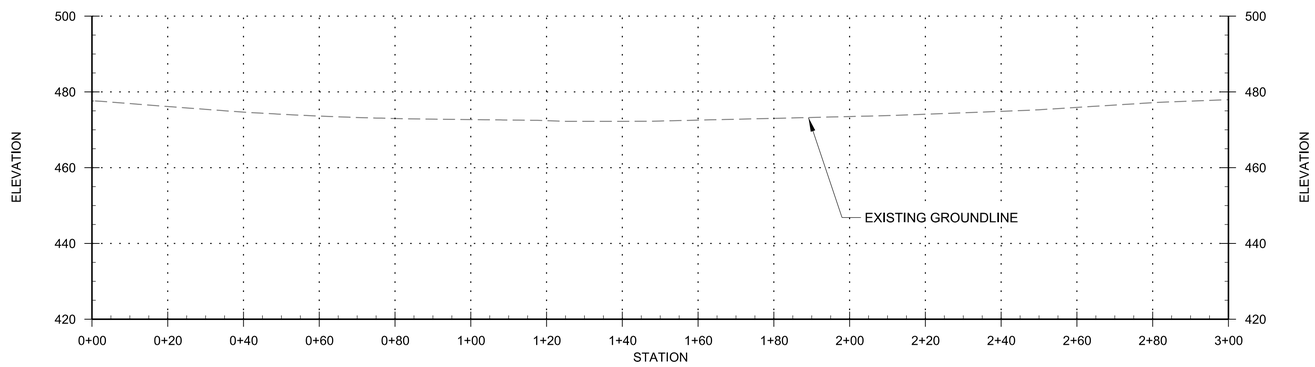

PROFILE ALONG FLOWABLE FILL CENTER

SCALE 1" = 20'

0 10' 20' 40'

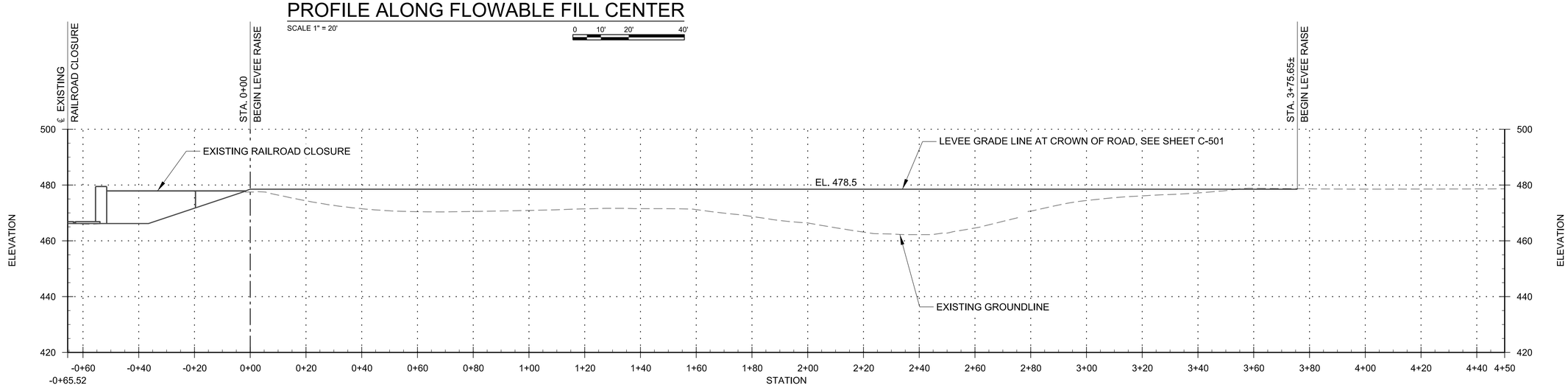

PROFILE ALONG LEVEE CENTER

SCALE 1" = 20'

0 10' 20' 40'

US Army Corps of Engineers®

MARK	DESCRIPTION	DATE	APPR.

MARK	DESCRIPTION	DATE	APPR.

U.S. ARMY CORPS OF ENGINEERS
ST. LOUIS DISTRICT
ST. LOUIS, MO 63103

DESIGNED BY: JAMES A. MILLS, P.E.
DATE: AUGUST 2013
DWN BY: K HANNAH
CKD BY: DJR
SOLICITATION NO.: W912P8-13-R-0722
SUBMITTED BY: GARY J. LEE, P.E.
CONTRACT NO.: CONTRACT NO.
PLOT SCALE: 1:1
PLOT DATE: N/A
FILE NUMBER: MOC-072
SIZE: ANSI D
FILE NAME: MOCH12_C-202.dgn

MONARCH-CHESTERFIELD LEVEE DISTRICT
PUMP STATION NO. 7 LEVEE RAISE
MISSOURI RIVER
ST. LOUIS COUNTY, MISSOURI

CIVIL
PROFILES
FLOWABLE FILL AND LEVEE RAISE

SHEET IDENTIFICATION
C-202

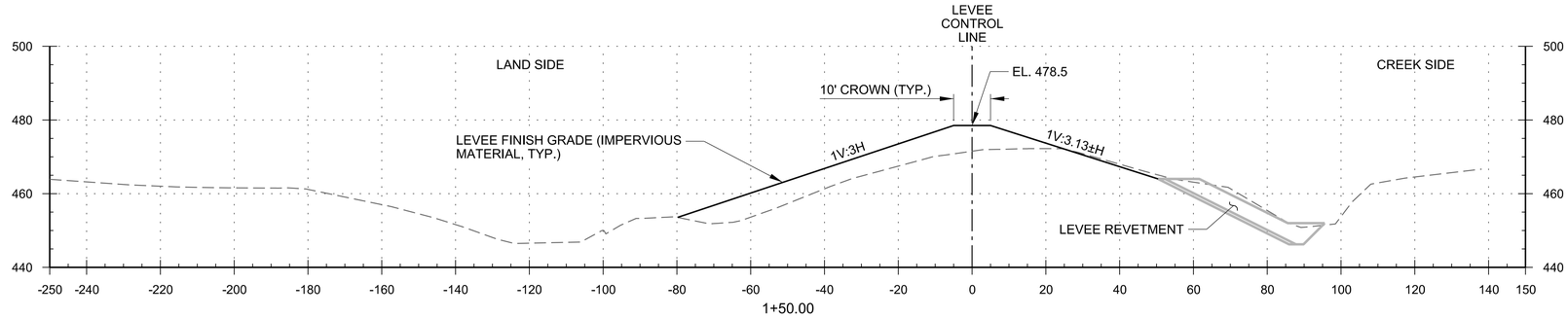

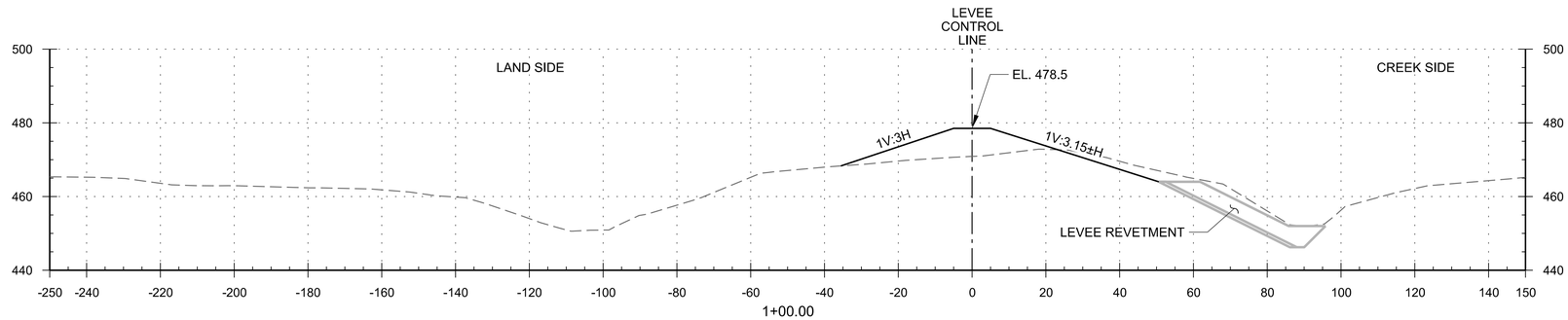

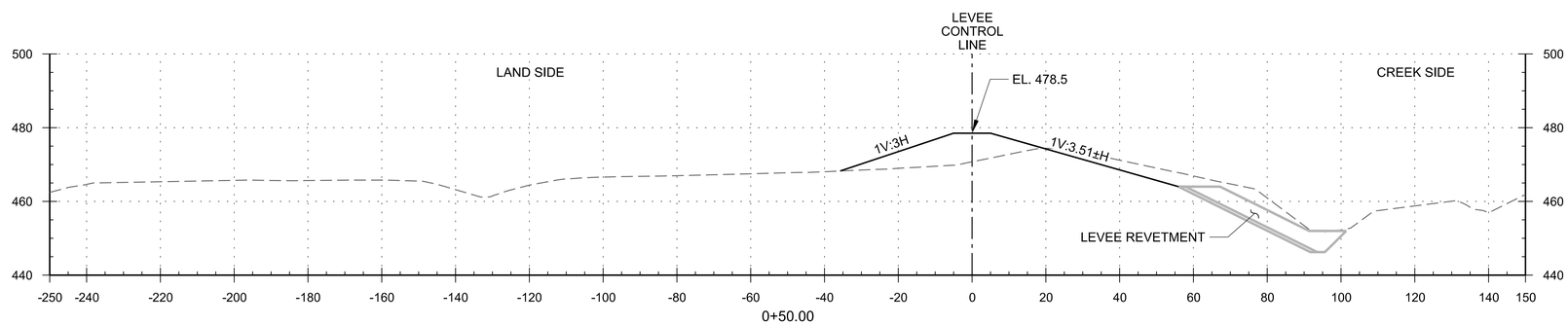

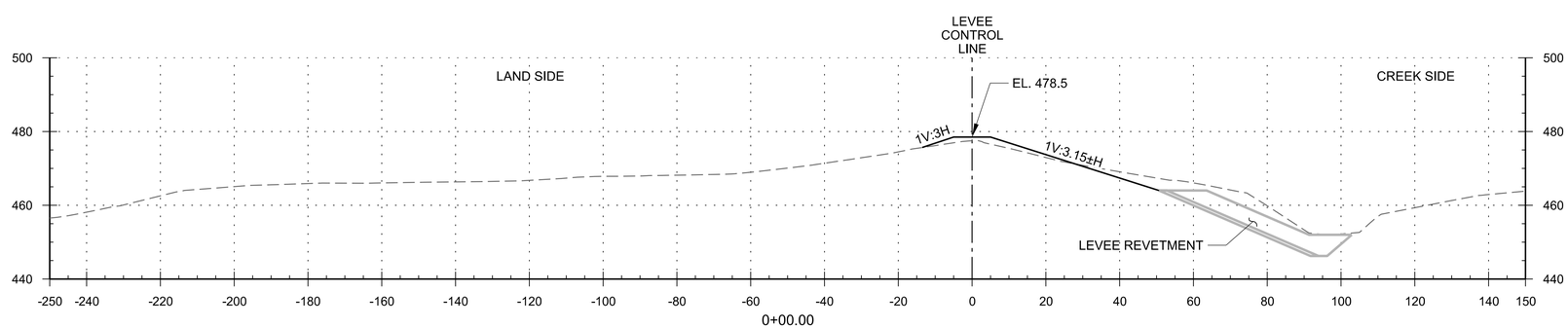

LEVEE CROSS SECTIONS - STA. 0+00 LV TO STA. 1+50 LV

SCALE 1" = 20'

0 10' 20' 40'

GENERAL SHEET NOTES

1. FOR LEVEE EXCAVATION AND GRADING PLANS SEE, SHEETS C-105 AND C-107.
2. ALL SLOPES AND DIMENSIONS SHOWN APPLY TO THIS SHEET AND ARE TYPICAL UNLESS OTHERWISE NOTED. ON CREEK SIDE, FLATTEN LEVEE SLOPE TO LESS THAN 1V ON 3H TO MEET BOTTOM OF BEDDING MATERIAL AT EL. 464.0.
3. LEVEE REVETMENT GENERALLY CONSISTS OF 50" OF 1000# RIPRAP ON 10" OF BEDDING MATERIAL ON BANK SLOPE AND AT CREEK, EXCEPT AT TRANSITION SECTIONS AT BEGINNING AND END OF REVETMENT..
4. SEE SHEETS C-305 THROUGH C-308 FOR REVETMENT CROSS SECTIONS.
5. SEE SHEET C-104 FOR LEVEE CONTROL LINE DATA.
6. SEE SHEET C-501 FOR LEVEE CROWN ROAD TYPICAL SECTION. LEVEE CROWN ROAD NOT SHOWN FOR CLARITY.

US Army Corps of Engineers®

MARK	DESCRIPTION	DATE	APPR.

MARK	DESCRIPTION	DATE	APPR.

U.S. ARMY CORPS OF ENGINEERS
ST. LOUIS DISTRICT
ST. LOUIS, MO 63103

DESIGNED BY: JAMES A. MILLS, P.E.
DWN BY: KRH
CKD BY: DJR
SUBMITTED BY: GARY J. LEE, P.E.
PLOT SCALE: 1:1
PLOT DATE: N/A
DATE: AUGUST 2013
SOLICITATION NO.: W912P8-13-R-0722
CONTRACT NO.: CONTRACT NO.
FILE NUMBER: MOC-012
SIZE: ANSI D
FILE NAME: MOCH12_C-301.dgn

MONARCH-CHESTERFIELD LEVEE DISTRICT
PUMP STATION NO. 7 LEVEE RAISE
MISSOURI RIVER
ST. LOUIS COUNTY, MISSOURI

CIVIL
LEVEE CROSS SECTIONS
STA. -0+50 TO STA. 1+00.00

SHEET IDENTIFICATION
C-301

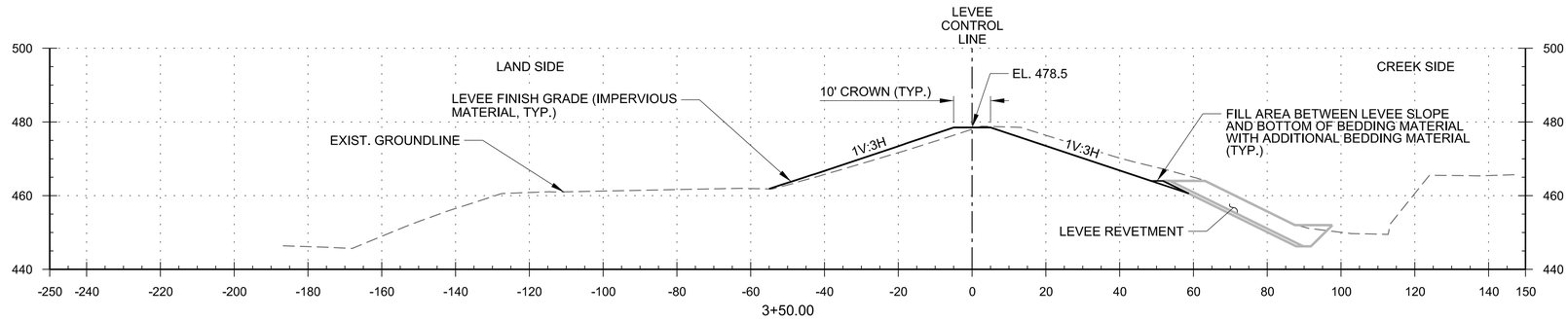

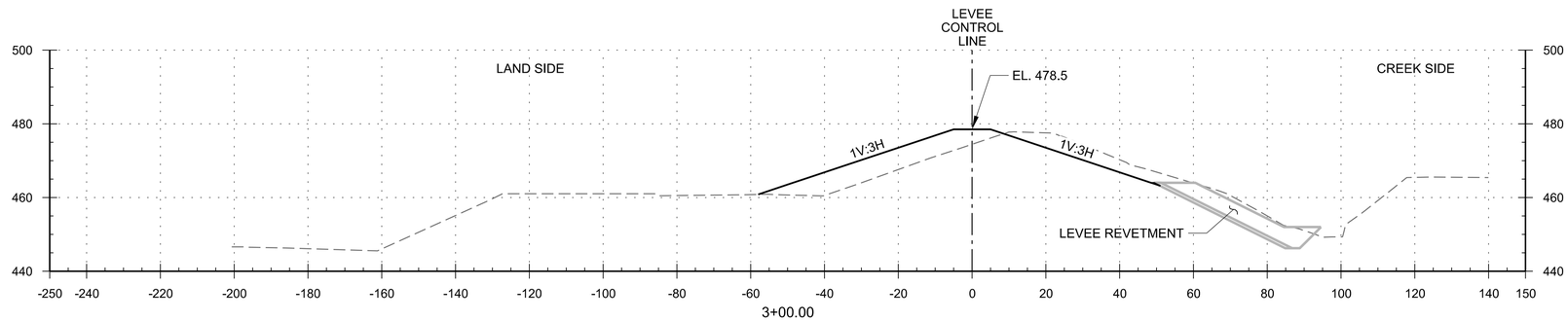

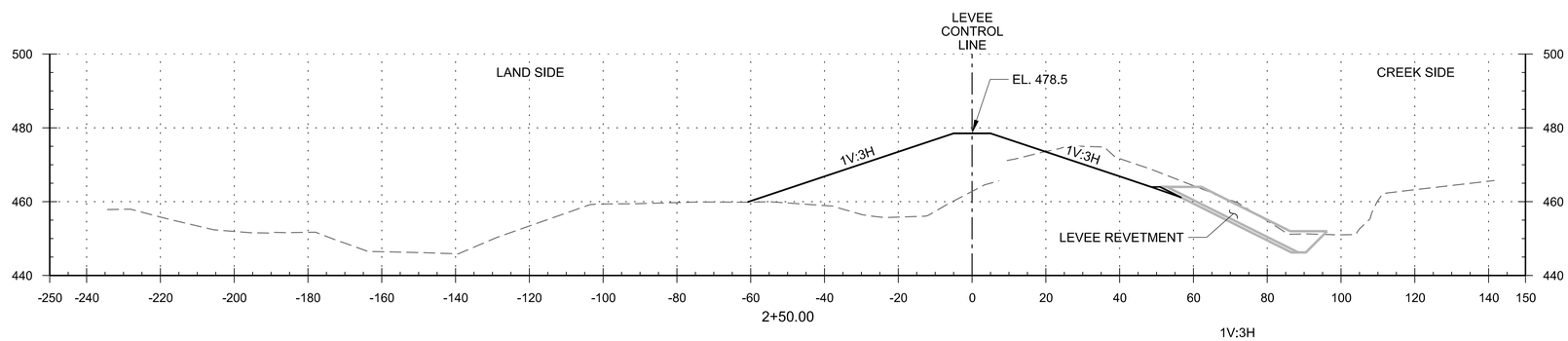

1V:3H

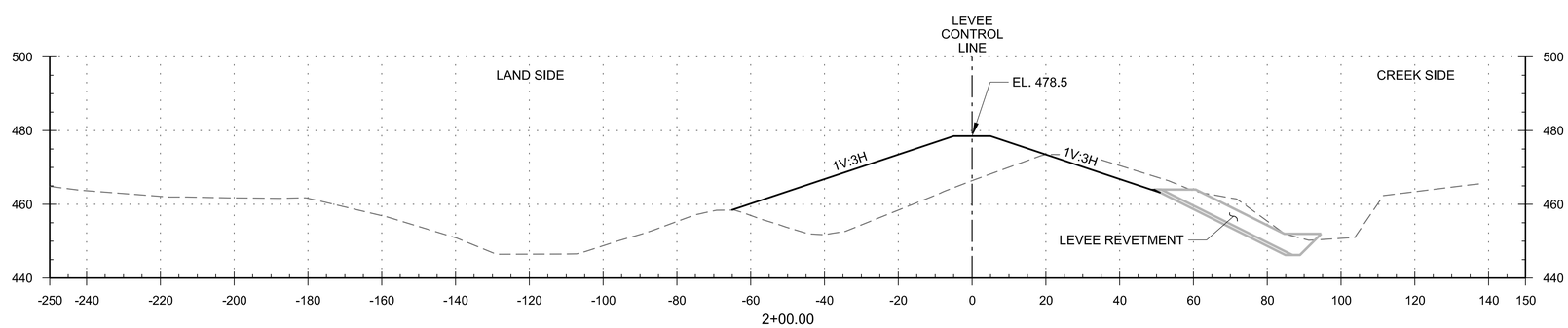

LEVEE CROSS SECTIONS - STA. 2+00 LV TO STA. 3+50 LV

SCALE 1" = 20'

0 10' 20' 40'

GENERAL SHEET NOTES

1. FOR LEVEE EXCAVATION AND GRADING PLANS SEE, SHEETS C-105 AND C-107.
2. ALL SLOPES AND DIMENSIONS SHOWN APPLY TO THIS SHEET AND ARE TYPICAL UNLESS OTHERWISE NOTED.
3. LEVEE REVETMENT GENERALLY CONSISTS OF 50" OF 1000# RIPRAP ON 10" OF BEDDING MATERIAL ON BANK SLOPE AND AT CREEK, EXCEPT AT TRANSITION SECTIONS AT BEGINNING AND END OF REVETMENT..
4. SEE SHEETS C-305 THROUGH C-308 FOR REVETMENT CROSS SECTIONS.
5. SEE SHEET C-104 FOR LEVEE CONTROL LINE DATA.
6. SEE SHEET C-501 FOR LEVEE CROWN ROAD TYPICAL SECTION. LEVEE CROWN ROAD NOT SHOWN FOR CLARITY.

US Army Corps of Engineers®

MARK	DESCRIPTION	DATE	APPR.

MARK	DESCRIPTION	DATE	APPR.

U.S. ARMY CORPS OF ENGINEERS
ST. LOUIS DISTRICT
ST. LOUIS, MO 63103

DESIGNED BY: JAMES A. MILLS, P.E.
DWN BY: KRH
CKD BY: DJR
SUBMITTED BY: GARY J. LEE, P.E.
PLOT SCALE: 1:1
PLOT DATE: N/A
DATE: AUGUST 2013
SOLICITATION NO.: W912P8-13-R-0722
CONTRACT NO.: CONTRACT NO.
FILE NUMBER: MOC-012
SIZE: ANSI D
FILE NAME: MOCH12_C-302.dgn

MONARCH-CHESTERFIELD LEVEE DISTRICT
PUMP STATION NO. 7 LEVEE RAISE
MISSOURI RIVER
ST. LOUIS COUNTY, MISSOURI

CIVIL
LEVEE CROSS SECTIONS
STA. 2+00 TO STA. 3+00.00

SHEET IDENTIFICATION
C-302

GENERAL SHEET NOTES

1. FOR LEVEE EXCAVATION AND GRADING PLANS SEE, SHEETS C-105 AND C-107.
2. ALL SLOPES AND DIMENSIONS SHOWN APPLY TO THIS SHEET AND ARE TYPICAL UNLESS OTHERWISE NOTED.
3. LEVEE REVETMENT GENERALLY CONSISTS OF 50" OF 1000# RIPRAP ON 10" OF BEDDING MATERIAL ON BANK SLOPE AND AT CREEK, EXCEPT AT TRANSITION SECTIONS AT BEGINNING AND END OF REVETMENT..
4. SEE SHEETS C-305 THROUGH C-308 FOR REVETMENT CROSS SECTIONS.
5. SEE SHEET C-104 FOR LEVEE CONTROL LINE DATA.
6. SEE SHEET C-501 FOR LEVEE CROWN ROAD TYPICAL SECTION. LEVEE CROWN ROAD NOT SHOWN FOR CLARITY.

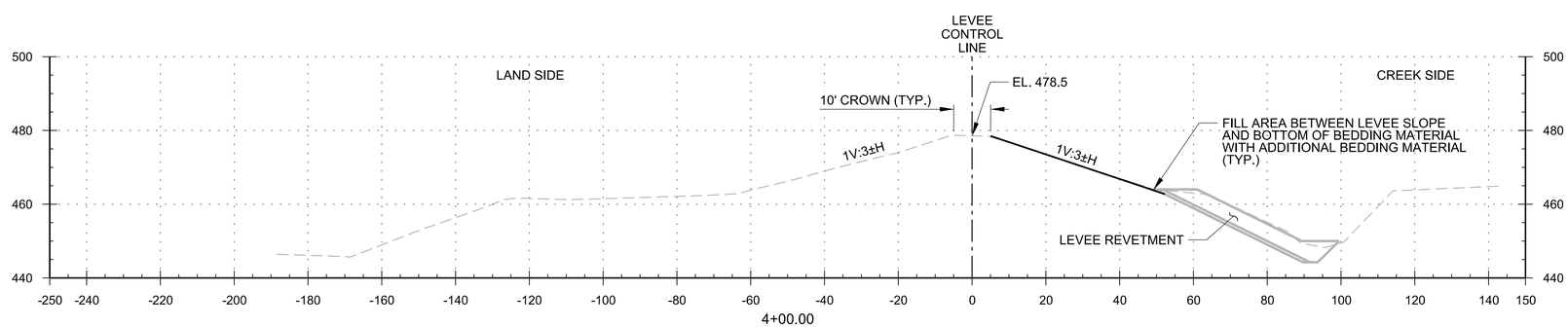

LEVEE CROSS SECTIONS - STA. 4+00.00 LV

SCALE 1" = 20'

0 10' 20' 40'

US Army Corps of Engineers®

MARK	DESCRIPTION	DATE	APPR.

MARK	DESCRIPTION	DATE	APPR.

U.S. ARMY CORPS OF ENGINEERS
ST. LOUIS DISTRICT
ST. LOUIS, MO 63103

DESIGNED BY: JAMES A. MILLS, P.E.
DWN BY: KRH
CKD BY: DJR
SUBMITTED BY: GARY J. LEE, P.E.
PLOT SCALE: 1:1
PLOT DATE: N/a
DATE: AUGUST 2013
SOLICITATION NO.: W912P8-13-R-0722
CONTRACT NO.: CONTRACT NO.
FILE NUMBER: MOC-072
SIZE: ANSI D
FILE NAME: MOCH12_C-303.dgn

MONARCH-CHESTERFIELD LEVEE DISTRICT
PUMP STATION NO. 7 LEVEE RAISE
MISSOURI RIVER
ST. LOUIS COUNTY, MISSOURI

CIVIL
LEVEE CROSS SECTIONS
STA. 4+00.00

SHEET IDENTIFICATION
C-303

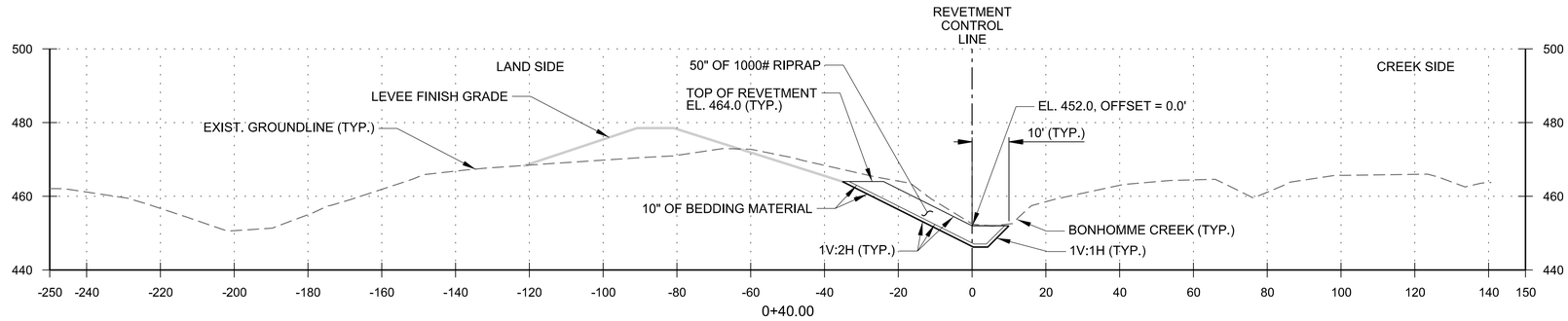

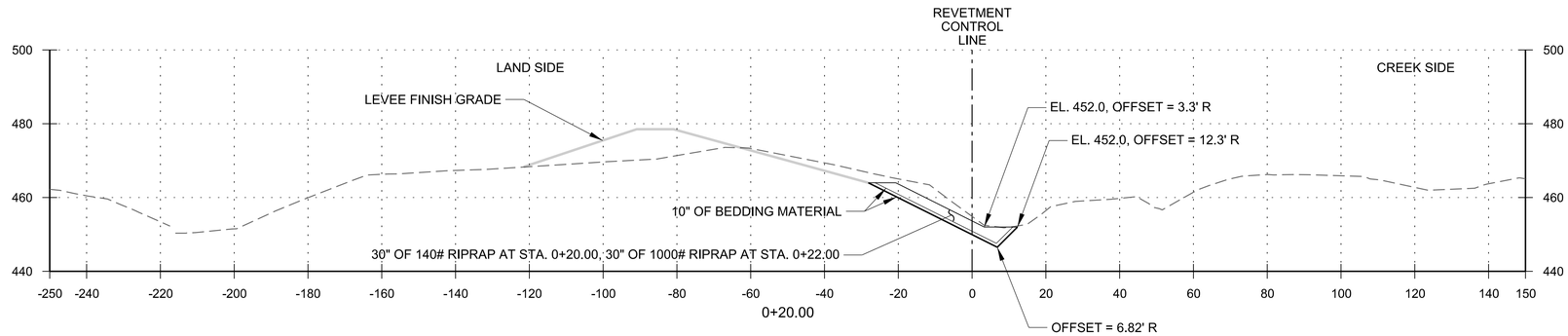

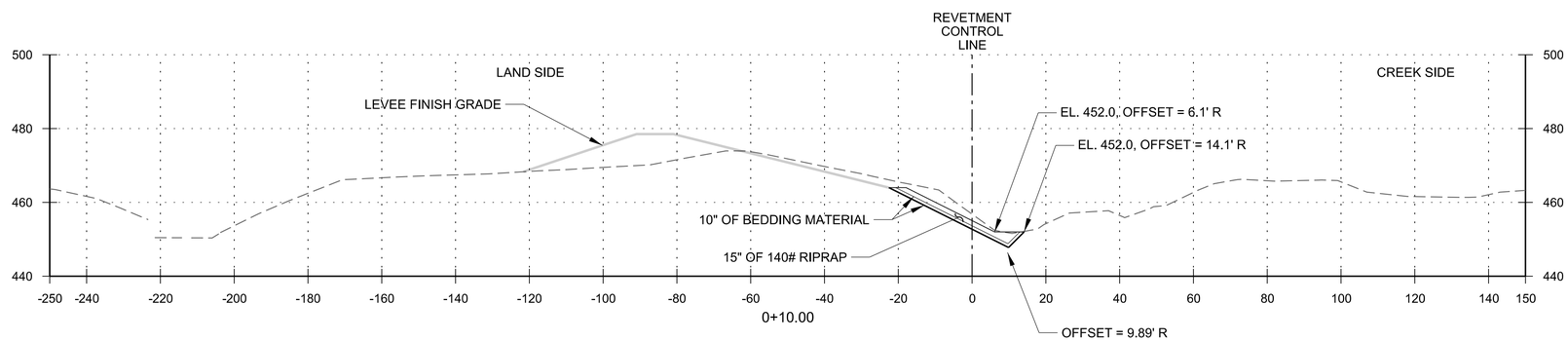

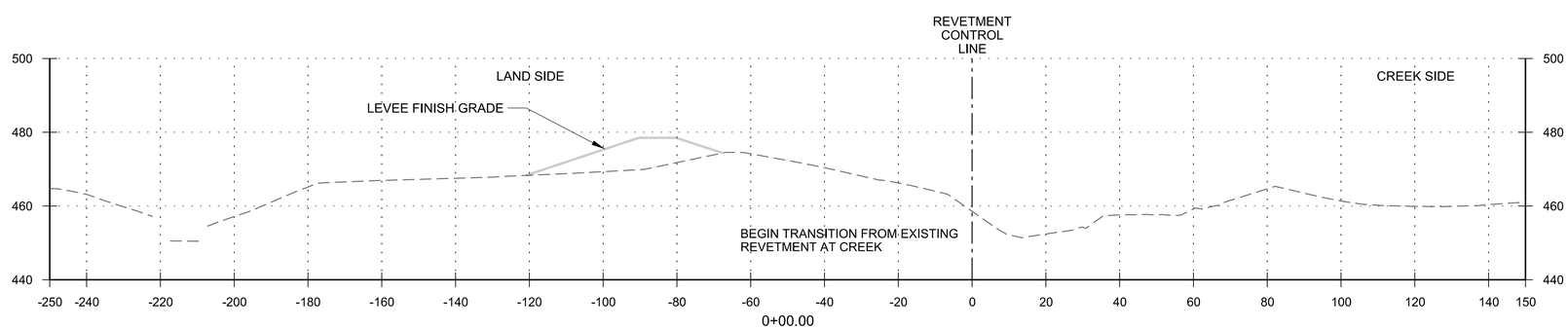

REVETMENT CROSS SECTIONS - STA. 0+00 RR TO STA. 0+40 RR

SCALE 1" = 20'

0 10' 20' 40'

GENERAL SHEET NOTES

1. FOR REVETMENT EXCAVATION AND GRADING PLANS SEE, SHEETS C-105 AND C-107.
2. ALL SLOPES AND DIMENSIONS SHOWN APPLY TO THIS SHEET AND ARE TYPICAL UNLESS OTHERWISE NOTED.
3. SEE SHEETS C-301 THROUGH C-303 FOR LEVEE CROSS SECTIONS.
4. SEE SHEET C-103 FOR REVETMENT CONTROL LINE DATA.

US Army Corps of Engineers®

MARK	DESCRIPTION	DATE	APPR.

MARK	DESCRIPTION	DATE	APPR.

U.S. ARMY CORPS OF ENGINEERS
ST. LOUIS DISTRICT
ST. LOUIS, MO 63103

DESIGNED BY: JAMES A. MILLS, P.E.
DWN BY: KRH
CKD BY: DJR
SUBMITTED BY:
DATE: AUGUST 2013
SOLICITATION NO.: W912P8-13-R-0722
CONTRACT NO.: CONTRACT NO.
FILE NUMBER: MOC-012
PLOT SCALE: 1:1
PLOT DATE: N/A
SIZE: ANSI D
FILE NAME: MOCH12_C-304.dgn

STA. 0+00 TO STA. 0+40

MONARCH-CHESTERFIELD LEVEE DISTRICT
PUMP STATION NO. 7 LEVEE RAISE
MISSOURI RIVER
ST. LOUIS COUNTY, MISSOURI

CIVIL
REVETMENT CROSS SECTIONS
STA. 0+00 TO STA. 0+40

SHEET IDENTIFICATION
C-304

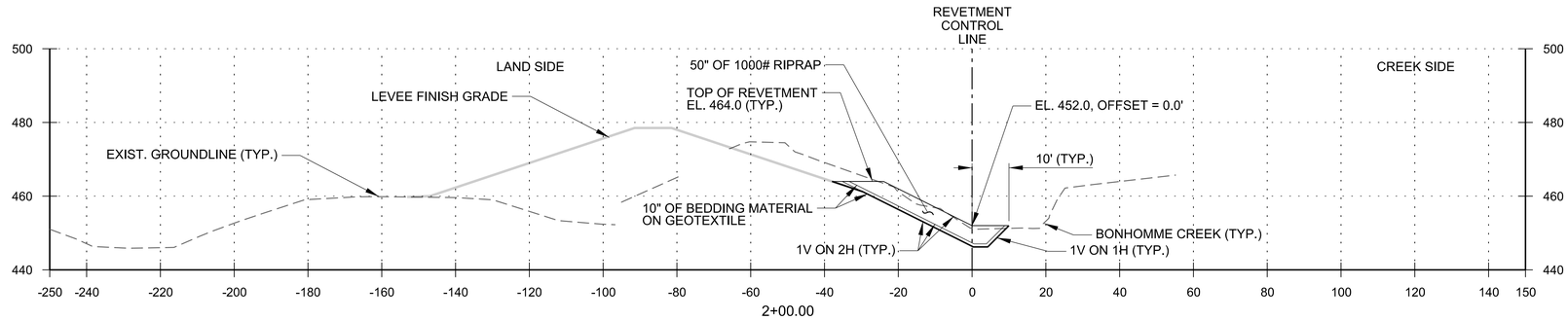

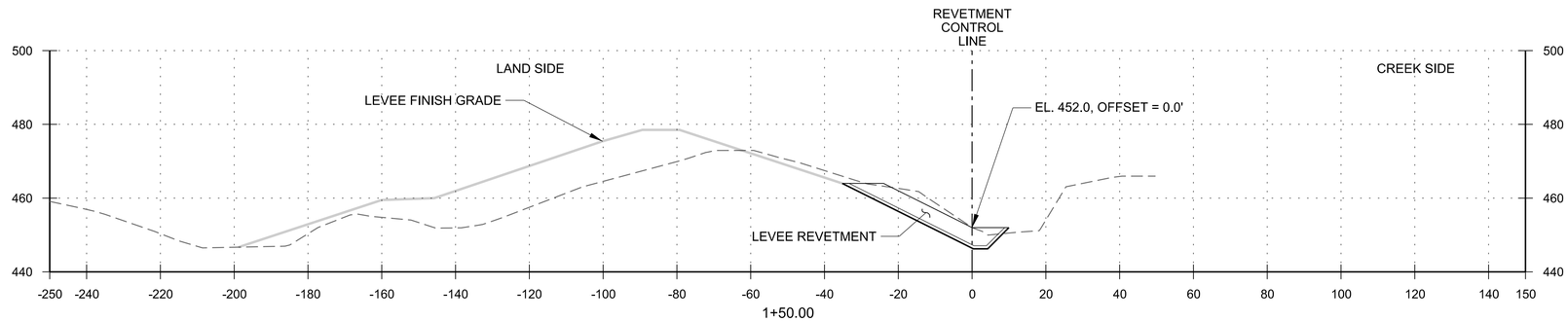

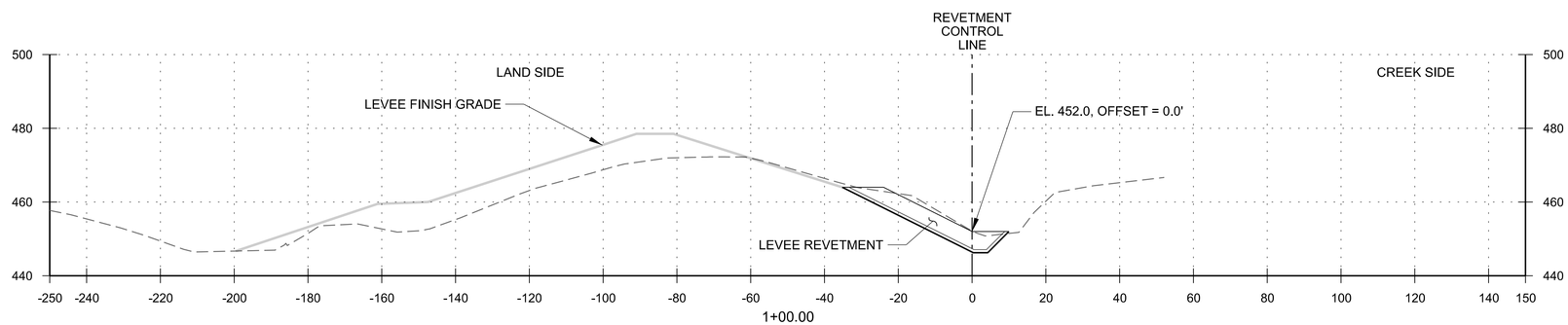

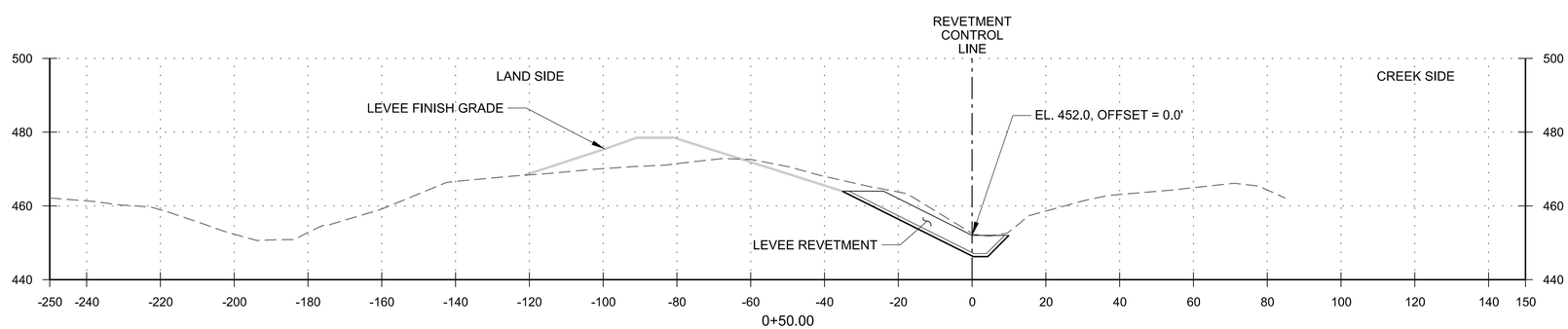

REVETMENT CROSS SECTIONS - STA. 0+50 RR TO STA. 2+00 RR

SCALE 1" = 20'

0 10' 20' 40'

GENERAL SHEET NOTES

1. FOR REVETMENT EXCAVATION AND GRADING PLANS SEE, SHEETS C-105 AND C-107.
2. ALL SLOPES AND DIMENSIONS SHOWN APPLY TO THIS SHEET AND ARE TYPICAL UNLESS OTHERWISE NOTED.
3. SEE SHEETS C-301 THROUGH C-303 FOR LEVEE CROSS SECTIONS.
4. SEE SHEET C-103 FOR REVETMENT CONTROL LINE DATA.

US Army Corps of Engineers®

MARK	DESCRIPTION	DATE	APPR.

MARK	DESCRIPTION	DATE	APPR.

U.S. ARMY CORPS OF ENGINEERS
ST. LOUIS DISTRICT
ST. LOUIS, MO 63103

DESIGNED BY: JAMES A. MILLS, P.E.
DATE: AUGUST 2013
DWN BY: KRH
CKD BY: DJR
SOLICITATION NO.: W912P8-13-R-0722
SUBMITTED BY: GARY J. LEE, P.E.
CONTRACT NO.: CONTRACT NO.
PLOT SCALE: 1:1
PLOT DATE: N/A
FILE NUMBER: MOC-012
SIZE: ANSI D
FILE NAME: MOCH12_C-305.dgn

MONARCH-CHESTERFIELD LEVEE DISTRICT
PUMP STATION NO. 7 LEVEE RAISE
MISSOURI RIVER
ST. LOUIS COUNTY, MISSOURI

CIVIL
REVETMENT CROSS SECTIONS
STA. 0+50 TO STA. 2+00

SHEET IDENTIFICATION
C-305

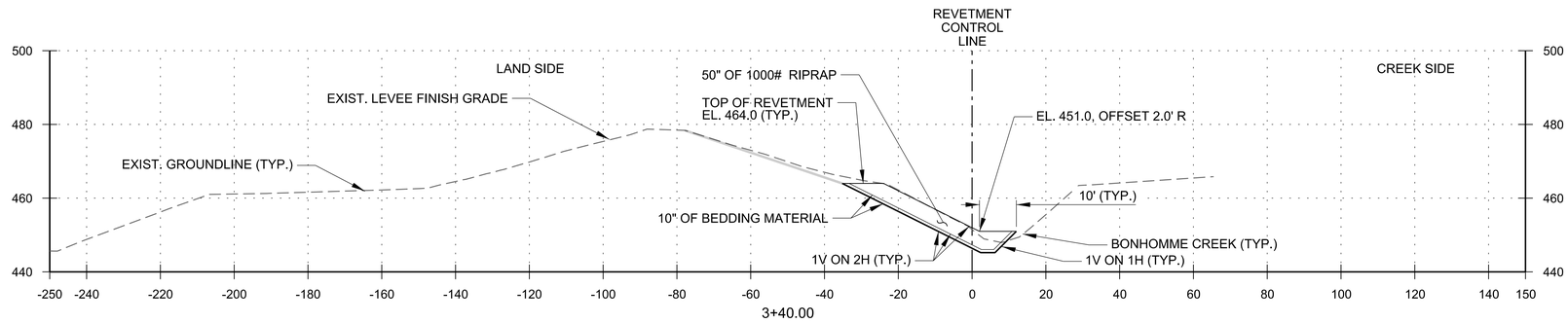

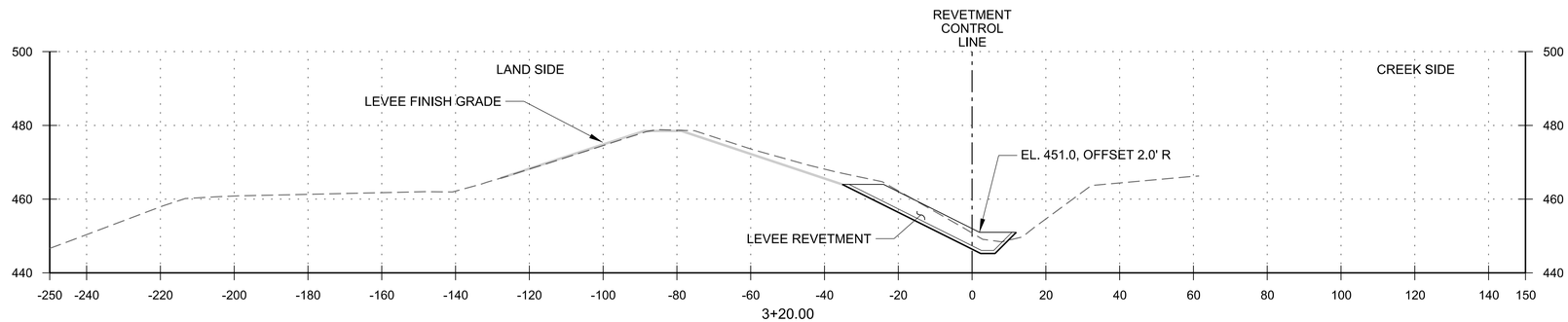

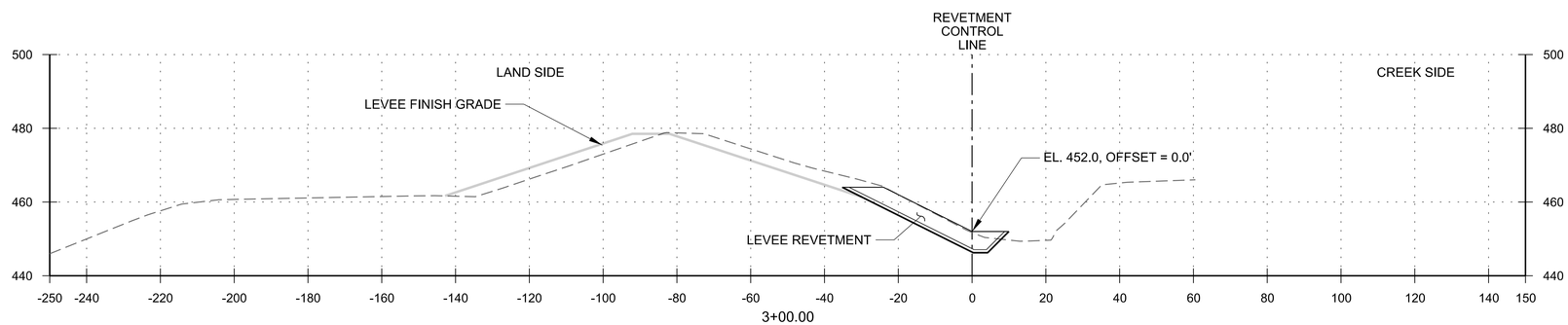

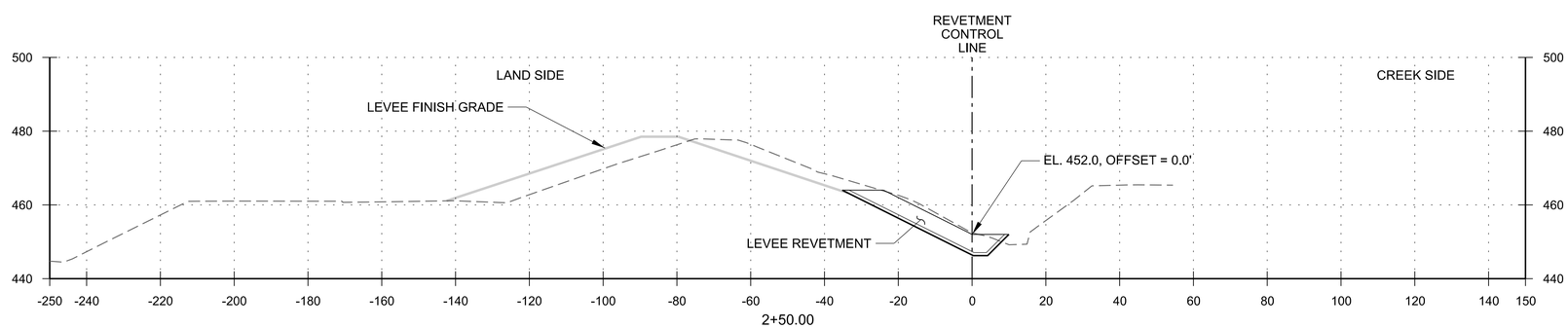

REVETMENT CROSS SECTIONS - STA. 2+50 RR TO STA. 3+40 RR

SCALE 1" = 20'

0 10' 20' 40'

GENERAL SHEET NOTES

1. FOR REVETMENT EXCAVATION AND GRADING PLANS SEE, SHEETS C-105 AND C-107.
2. ALL SLOPES AND DIMENSIONS SHOWN APPLY TO THIS SHEET AND ARE TYPICAL UNLESS OTHERWISE NOTED.
3. SEE SHEETS C-301 THROUGH C-303 FOR LEVEE CROSS SECTIONS.
4. SEE SHEET C-103 FOR REVETMENT CONTROL LINE DATA.

US Army Corps of Engineers®

MARK	DESCRIPTION	DATE	APPR.

MARK	DESCRIPTION	DATE	APPR.

U.S. ARMY CORPS OF ENGINEERS
ST. LOUIS DISTRICT
ST. LOUIS, MO 63103

DESIGNED BY: JAMES A. MILLS, P.E.
DATE: AUGUST 2013
DWN BY: KRH
CKD BY: DJR
SOLICITATION NO.: W912P8-13-R-0722
SUBMITTED BY: GARY J. LEE, P.E.
CONTRACT NO.: CONTRACT NO.
PLOT SCALE: 1:1
PLOT DATE: N/A
FILE NUMBER: MOC-012
SIZE: ANSI D
FILE NAME: MOCH12_C-306.dgn

MONARCH-CHESTERFIELD LEVEE DISTRICT
PUMP STATION NO. 7 LEVEE RAISE
MISSOURI RIVER
ST. LOUIS COUNTY, MISSOURI

CIVIL
REVETMENT CROSS SECTIONS
STA. 2+50 TO STA. 3+40

SHEET IDENTIFICATION
C-306

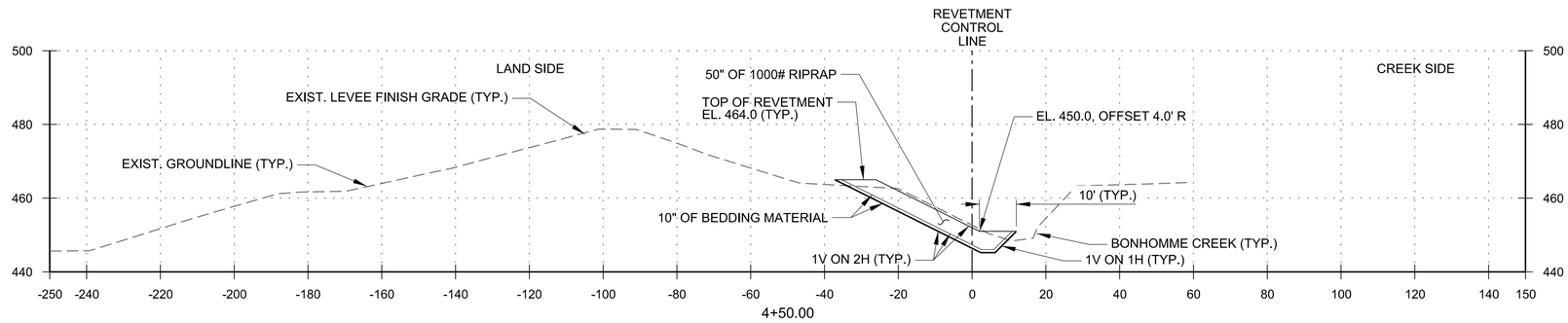

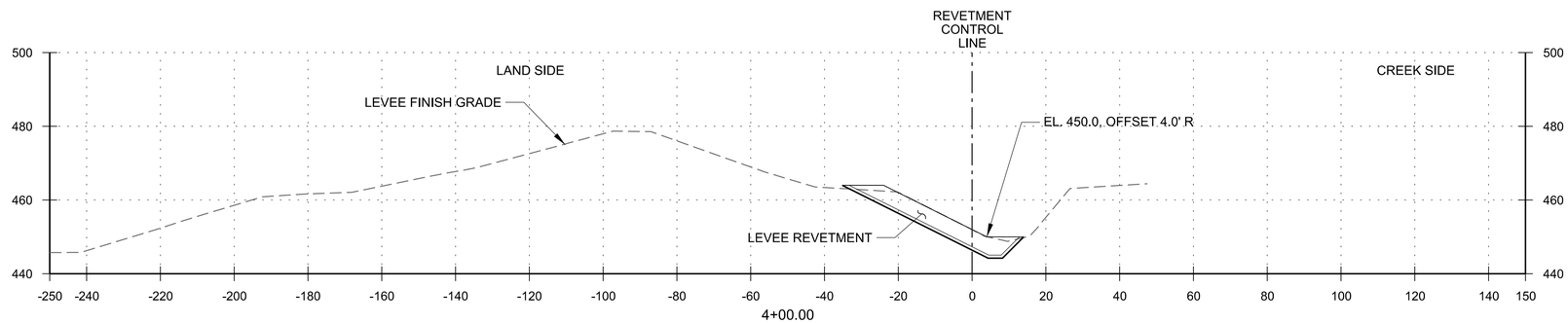

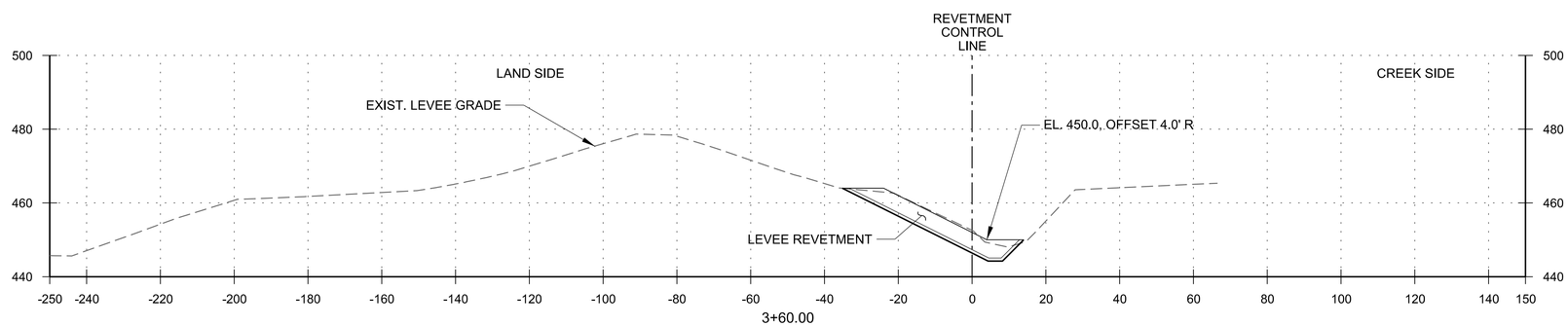

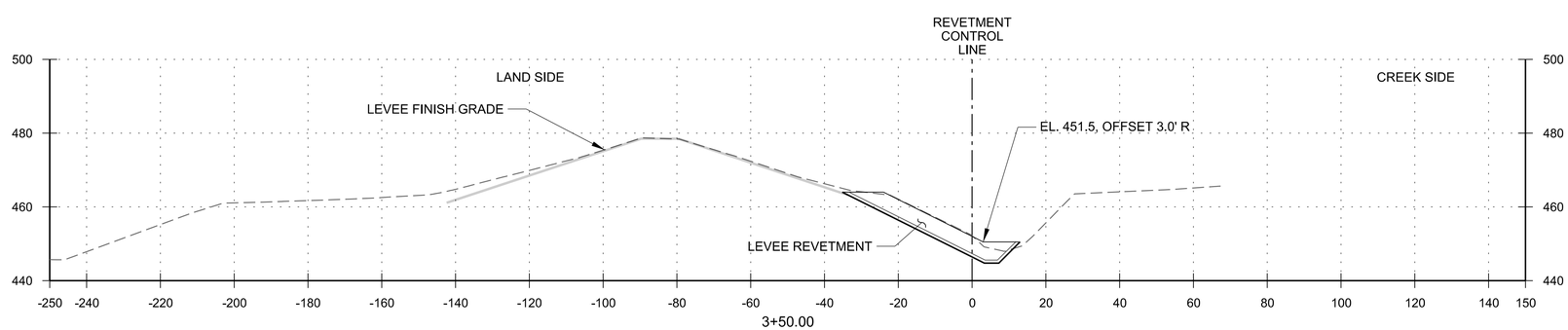

REVETMENT CROSS SECTIONS - STA. 3+50 RR TO STA. 4+50 RR

SCALE 1" = 20'

0 10' 20' 40'

GENERAL SHEET NOTES

1. FOR REVETMENT EXCAVATION AND GRADING PLANS SEE, SHEETS C-105 AND C-107.
2. ALL SLOPES AND DIMENSIONS SHOWN APPLY TO THIS SHEET AND ARE TYPICAL UNLESS OTHERWISE NOTED.
3. SEE SHEETS C-301 THROUGH C-303 FOR LEVEE CROSS SECTIONS.
4. SEE SHEET C-103 FOR REVETMENT CONTROL LINE DATA.

US Army Corps of Engineers®

MARK	DESCRIPTION	DATE	APPR.

MARK	DESCRIPTION	DATE	APPR.

U.S. ARMY CORPS OF ENGINEERS
ST. LOUIS DISTRICT
ST. LOUIS, MO 63103

DESIGNED BY: JAMES A. MILLS, P.E.
DATE: AUGUST 2013
DWN BY: KRH
CKD BY: DJR
SOLICITATION NO.: W912P8-13-R-0722
SUBMITTED BY: GARY J. LEE, P.E.
CONTRACT NO.: CONTRACT NO.
PLOT SCALE: 1:1
PLOT DATE: N/A
FILE NUMBER: MOC-012
SIZE: ANSI D
FILE NAME: MOCH12_C-307.dgn

MONARCH-CHESTERFIELD LEVEE DISTRICT
PUMP STATION NO. 7 LEVEE RAISE
MISSOURI RIVER
ST. LOUIS COUNTY, MISSOURI

CIVIL
REVETMENT CROSS SECTIONS
STA. 3+50 TO STA. 4+50

SHEET IDENTIFICATION
C-307

GENERAL SHEET NOTES

1. FOR REVETMENT EXCAVATION AND GRADING PLANS SEE, SHEETS C-105 AND C-107.
2. ALL SLOPES AND DIMENSIONS SHOWN APPLY TO THIS SHEET AND ARE TYPICAL UNLESS OTHERWISE NOTED.
3. SEE SHEETS C-301 THROUGH C-303 FOR LEVEE CROSS SECTIONS.
4. SEE SHEET C-103 FOR REVETMENT CONTROL LINE DATA.

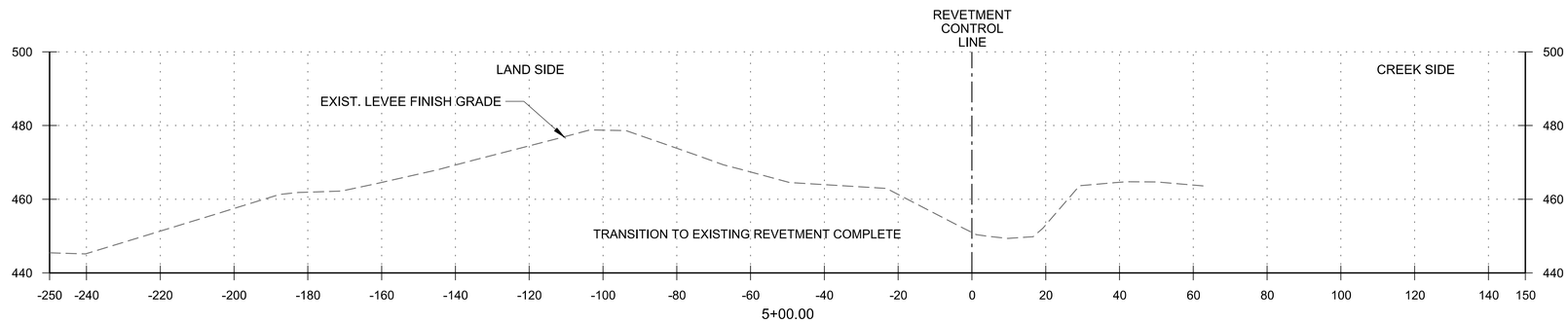

5+00.00

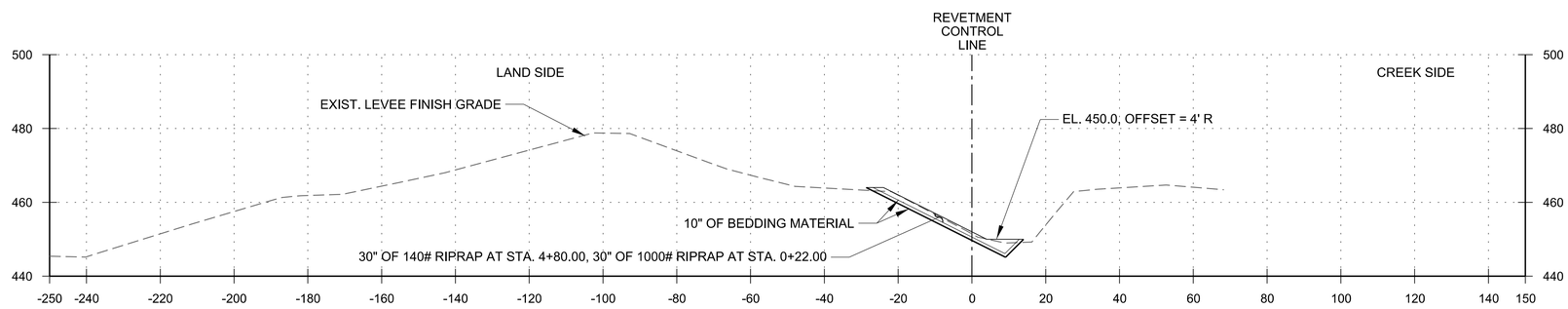

4+80.00

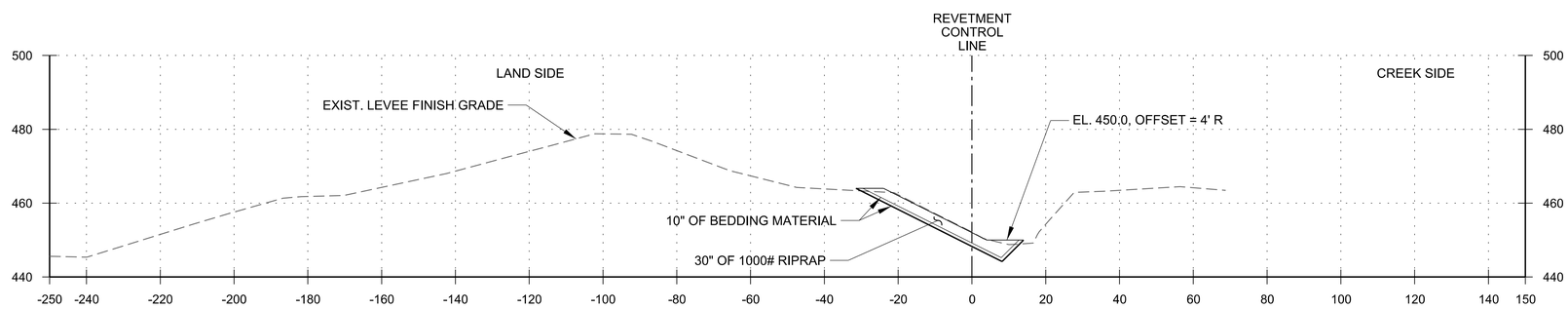

4+70.00

REVETMENT CROSS SECTIONS - STA. 4+70 RR TO STA. 5+00 RR

SCALE 1" = 20'

0 10' 20' 40'

US Army Corps of Engineers

MARK	DESCRIPTION	DATE	APPR.

MARK	DESCRIPTION	DATE	APPR.

U.S. ARMY CORPS OF ENGINEERS
ST. LOUIS DISTRICT
ST. LOUIS, MO 63103

DESIGNED BY: JAMES A. MILLS, P.E.
DATE: AUGUST 2013
DWN BY: KRH
CKD BY: DJR
SOLICITATION NO.: W912P8-13-R-0722
SUBMITTED BY: GARY J. LEE, P.E.
CONTRACT NO.: CONTRACT NO.
PLOT SCALE: 1:1
PLOT DATE: N/A
FILE NUMBER: MOC-012
SIZE: ANSI D
FILE NAME: MOCH12_C-308.dgn

MONARCH-CHESTERFIELD LEVEE DISTRICT
PUMP STATION NO. 7 LEVEE RAISE
MISSOURI RIVER
ST. LOUIS COUNTY, MISSOURI

CIVIL
REVETMENT CROSS SECTIONS
STA. 4+70 TO STA. 5+00

SHEET IDENTIFICATION
C-308

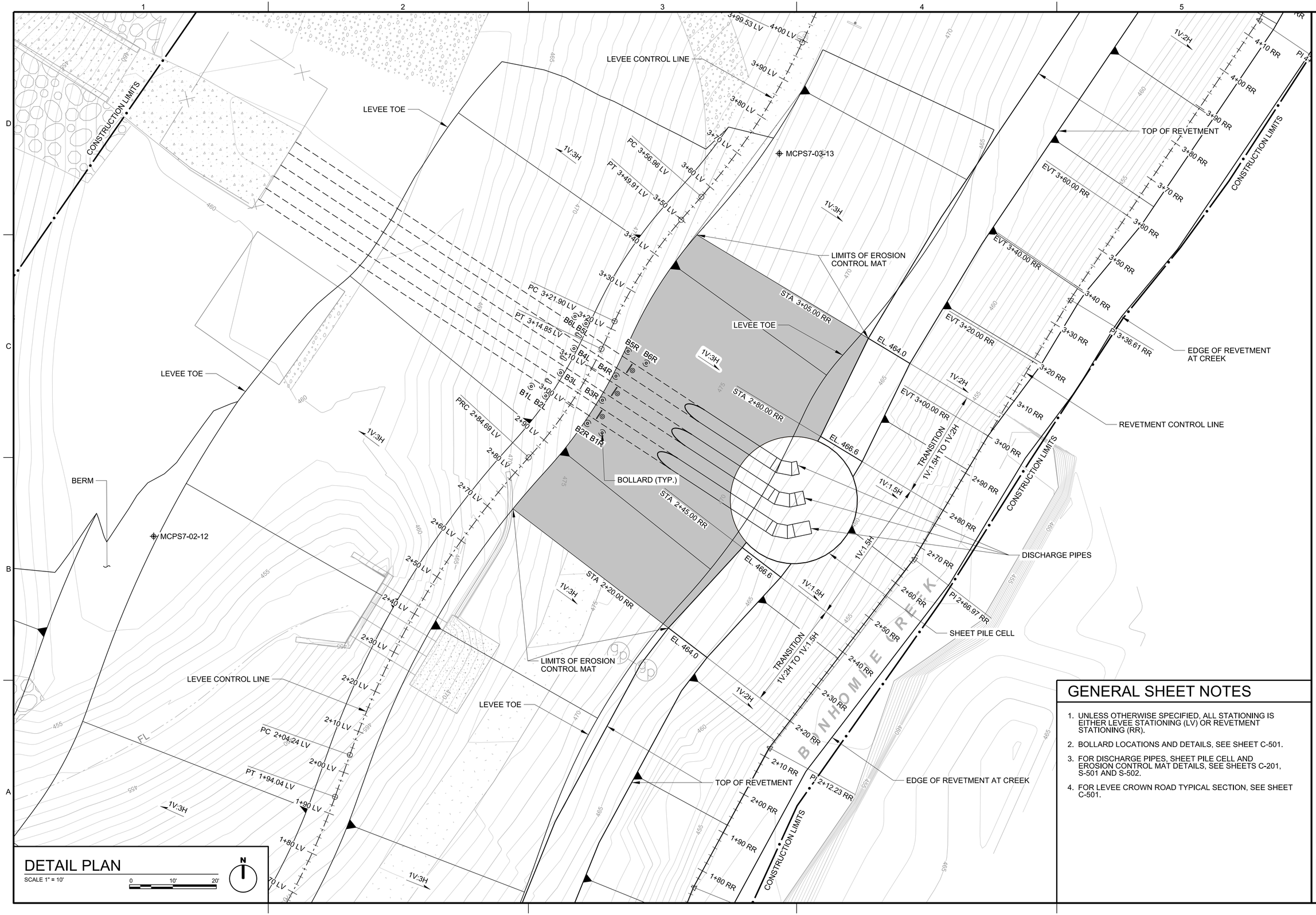

DETAIL PLAN

SCALE 1" = 10'

0 10' 20'

N

GENERAL SHEET NOTES

1. UNLESS OTHERWISE SPECIFIED, ALL STATIONING IS EITHER LEVEE STATIONING (LV) OR REVETMENT STATIONING (RR).
2. BOLLARD LOCATIONS AND DETAILS, SEE SHEET C-501.
3. FOR DISCHARGE PIPES, SHEET PILE CELL AND EROSION CONTROL MAT DETAILS, SEE SHEETS C-201, S-501 AND S-502.
4. FOR LEVEE CROWN ROAD TYPICAL SECTION, SEE SHEET C-501.

US Army Corps of Engineers®

MARK	DESCRIPTION	DATE	APPR.	MARK	DESCRIPTION	DATE	APPR.

U.S. ARMY CORPS OF ENGINEERS
ST. LOUIS DISTRICT
ST. LOUIS, MO 63103

DESIGNED BY: JAMES A. MILLS, P.E.
DWN BY: LHW
CKD BY: DJR
SUBMITTED BY: GARY J. LEE, P.E.
PLOT SCALE: 1:1
PLOT DATE:
SIZE: ANSI D
FILE NAME: MDCH12_C-401.dgn
DATE: AUGUST 2013
SOLICITATION NO.: W912P9-13-R-0722
CONTRACT NO.: CONTRACT NO.
FILE NUMBER: MDCH12

MONARCH-CHESTERFIELD LEVEE DISTRICT
PUMP STATION NO. 7 LEVEE RAISE
MISSOURI RIVER
ST. LOUIS COUNTY, MISSOURI

CIVIL
DETAIL PLAN AT
PUMP STATION DISCHARGE OUTFALL

SHEET IDENTIFICATION
C-401

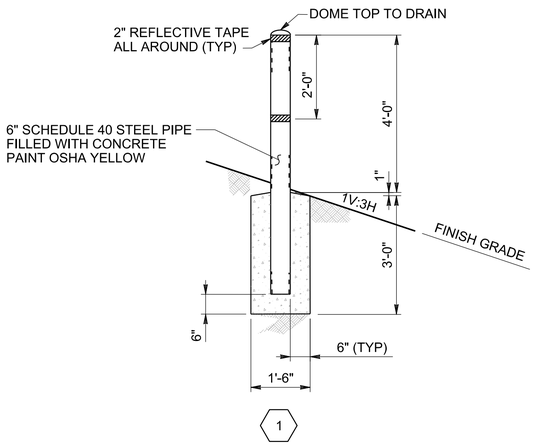

BOLLARD LOCATION TABLE		
BOLLARD	STATION	OFFSET
B1L	2+98.49 LV	9.75 L
B2L	2+98.59 LV	5.75 L
B3L	3+05.31 LV	5.75 L
B4L	3+12.05 LV	5.75 L
B5L	3+18.59 LV	5.74 L
B6L	3+19.01 LV	8.71 L
B1R	2+98.92 LV	9.74 R
B2R	2+98.85 LV	5.75 R
B3R	3+04.83 LV	5.75 R
B4R	3+10.83 LV	5.75 R
B5R	3+16.98 LV	5.74 R
B6R	3+16.29 LV	10.69 R

TYPICAL NON-RATED BOLLARD DETAIL

NOT TO SCALE

GENERAL SHEET NOTES

1. UNLESS OTHERWISE SPECIFIED, ALL STATIONING IS EITHER LEVEE STATIONING (LV) OR REVETMENT STATIONING (RR).
2. FOR BOLLARD LAYOUT, SEE SHEET C-401.
3. FOR LEVEE CROWN ROAD LOCATION, SEE SHEET C-107.

SHEET KEYNOTES

1. TYPICAL CREEKSIDE BOLLARD INSTALLATION SHOWN. CONSTRUCT LANDSIDE BOLLARDS OPPOSITE HAND.

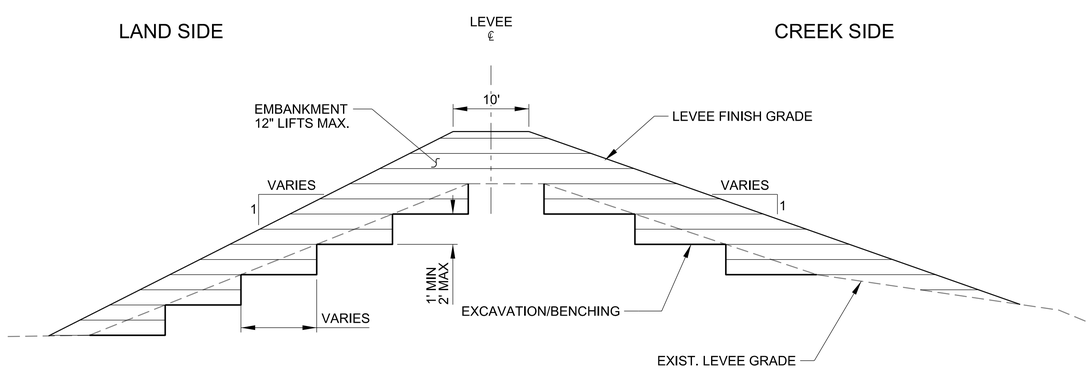

BENCHING DETAIL

NOT TO SCALE

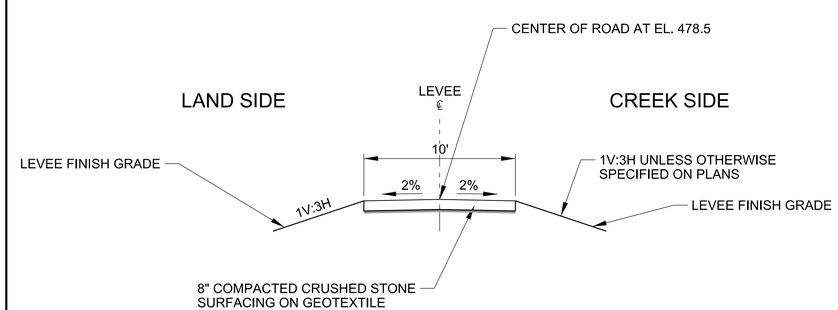

TYPICAL SECTION - LEVEE CROWN ROAD

NOT TO SCALE

US Army Corps of Engineers®

MARK	DESCRIPTION	DATE	APPR.

MARK	DESCRIPTION	DATE	APPR.

U.S. ARMY CORPS OF ENGINEERS
ST. LOUIS DISTRICT
ST. LOUIS, MO 63103

DESIGNED BY: JAMES A. MILLS, P.E.
DATE: AUGUST 2013
DWN BY: LHW
CKD BY: DJR
SOLICITATION NO.: W912P8-13-R-0722
SUBMITTED BY: GARY J. LEE, P.E.
CONTRACT NO.: CONTRACT NO.
PLOT SCALE: 1:1
PLOT DATE: No n
FILE NUMBER: MOC-012
SIZE: ANSI D
FILE NAME: MOCH12_C-501.dgn

MONARCH-CHESTERFIELD LEVEE DISTRICT
PUMP STATION NO. 7 LEVEE RAISE
MISSOURI RIVER
ST. LOUIS COUNTY, MISSOURI

CIVIL
DETAILS

SHEET IDENTIFICATION
C-501

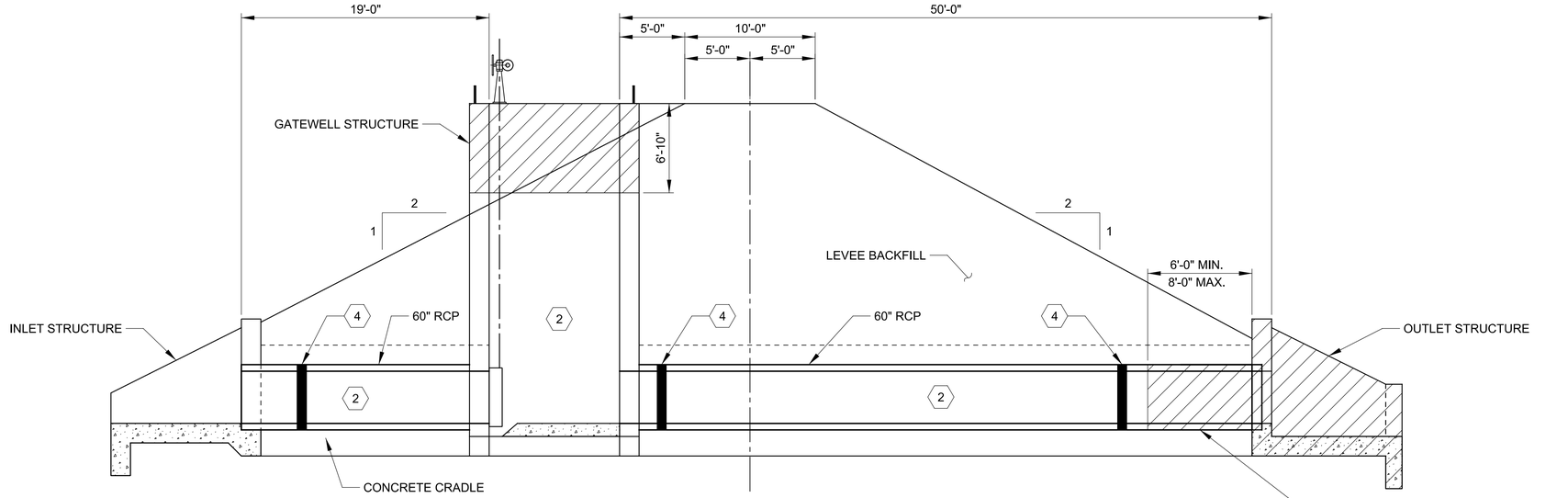

C1 SECTION AT EXISTING GATEWELL STRUCTURE

SCALE: NTS

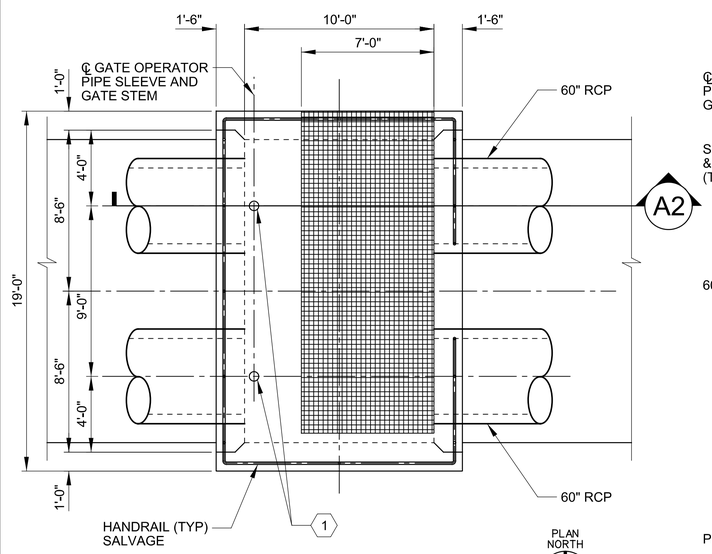

A1 GATEWELL STRUCTURE - PLAN

SCALE ¼" = 1'-0"

0 2' 4' 8'

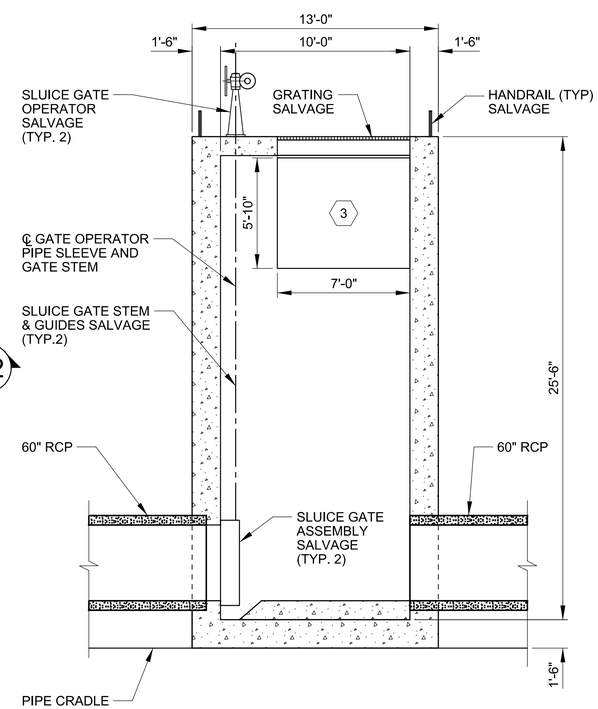

A2 SECTION

SCALE ¼" = 1'-0"

0 2' 4' 8'

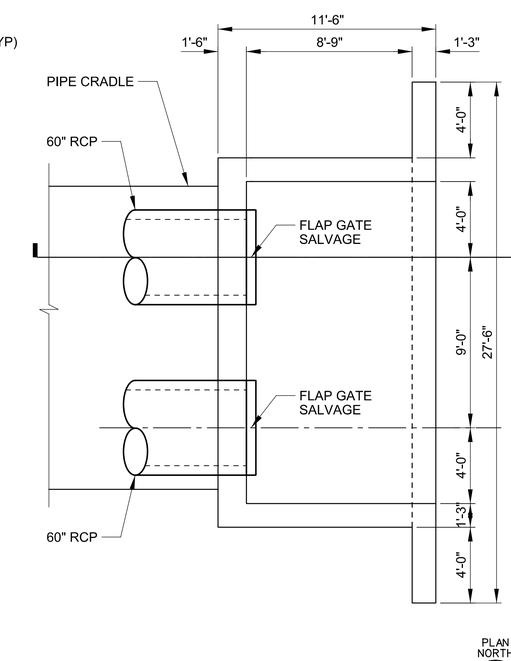

A3 OUTLET STRUCTURE - PLAN

SCALE ¼" = 1'-0"

0 2' 4' 8'

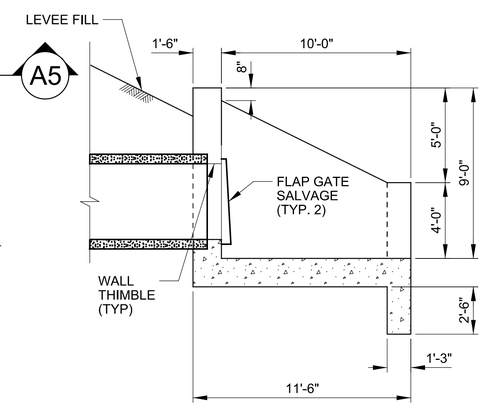

A5 SECTION

SCALE ¼" = 1'-0"

0 2' 4' 8'

GENERAL SHEET NOTES

1. REMOVAL AND DEMOLITION OF EXISTING GATEWELL SHALL BE IN ACCORDANCE WITH SPECIFICATION SECTION 02 21 11.
2. DETAILS ON SALVAGE ITEMS ARE FOUND IN SPECIFICATION 02 21 11.

⬡ SHEET KEYNOTES

1. SLUICE GATE OPERATORS NOT SHOWN FOR CLARITY.
2. PIPE ABANDONMENT AND GROUTING OF 60" RCP PIPES AND GATEWELL SHALL BE PERFORMED IN ACCORDANCE WITH SPECIFICATION 32 36 00.
3. LEAN CONRETE BLOCKOUT AREA. (FAR WALL OF GATEWELL ONLY).
4. BULKHEAD FOR GROUTING PIPES AND GATEWELLS. SEE SPECIFICATION 32 36 00.

STRUCTURAL SYMBOLS

REMOVAL LIMITS

US Army Corps of Engineers®

MARK	DESCRIPTION	DATE	APPR.	MARK	DESCRIPTION	DATE	APPR.

U.S. ARMY CORPS OF ENGINEERS
ST. LOUIS DISTRICT
ST. LOUIS, MO 63103

DESIGNED BY: KYLE J. ARENTSEN, P.E.
DWN BY: BMM
CKD BY: AMCR
SUBMITTED BY: STEPHEN G. FARKAS, P.E.
PLOT SCALE: 1:1
PLOT DATE:
SITE: ANSI D
FILE NAME: MOCH12_S-101.dgn
DATE: AUGUST 2013
SOLICITATION NO.: W912P9-13-R-0722
CONTRACT NO.:
CONTRACT NO.:
FILE NUMBER: MOC-01E

MONARCH-CHESTERFIELD LEVEE DISTRICT
PUMP STATION NO. 7 LEVEE RAISE
MISSOURI RIVER
ST. LOUIS COUNTY, MISSOURI

STRUCTURAL
DEMOLITION PLAN

SHEET IDENTIFICATION
S-101

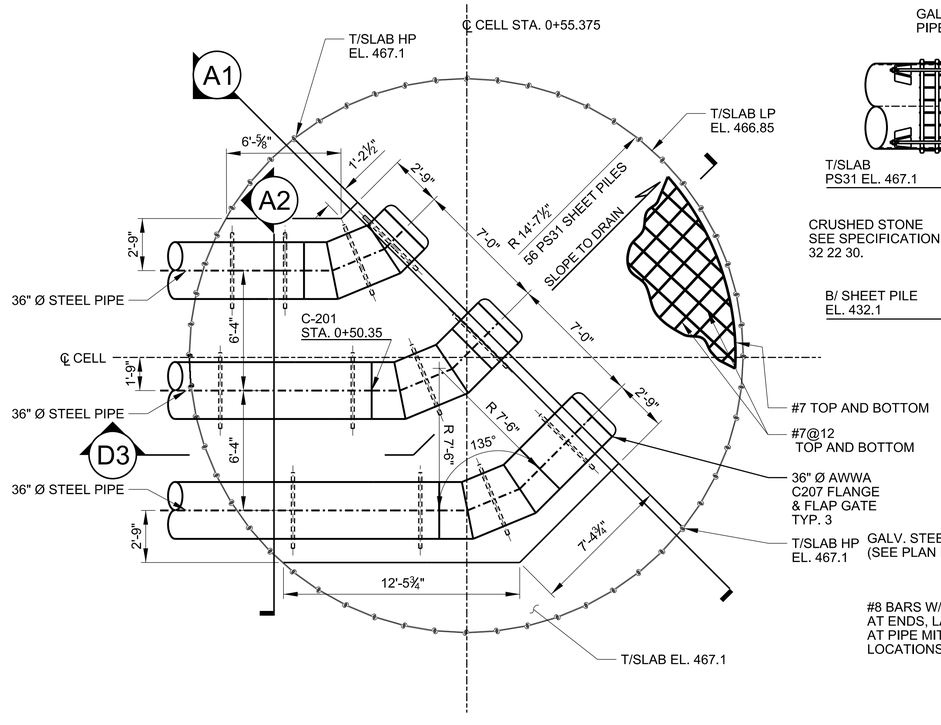

C1 OUTLET STRUCTURE - PLAN

SCALE ¼" = 1'-0"

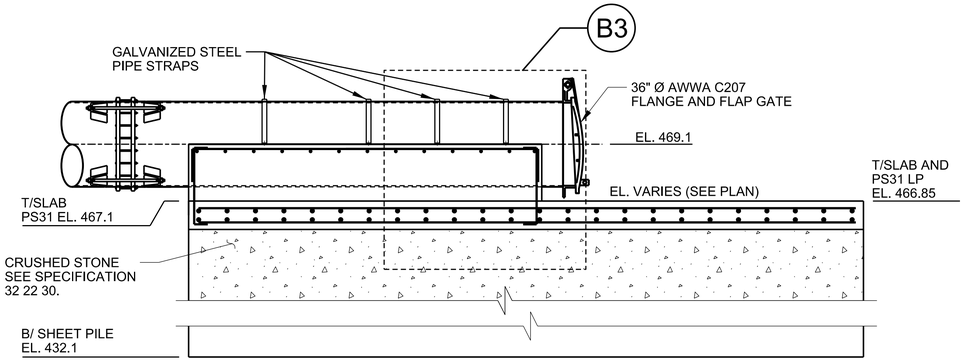

D3 SECTION

SCALE ⅜" = 1'-0"

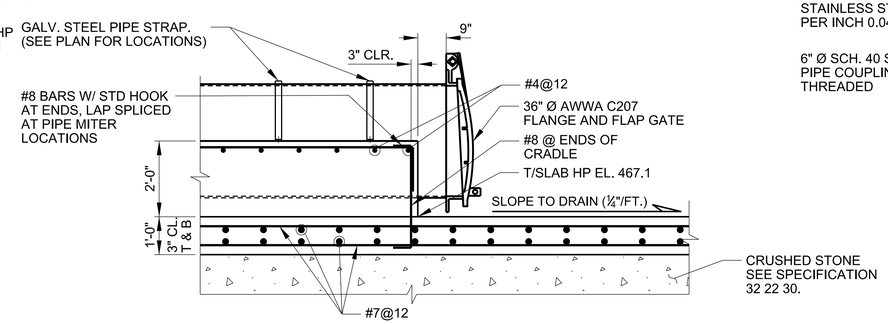

B3 DETAIL

SCALE ½" = 1'-0"

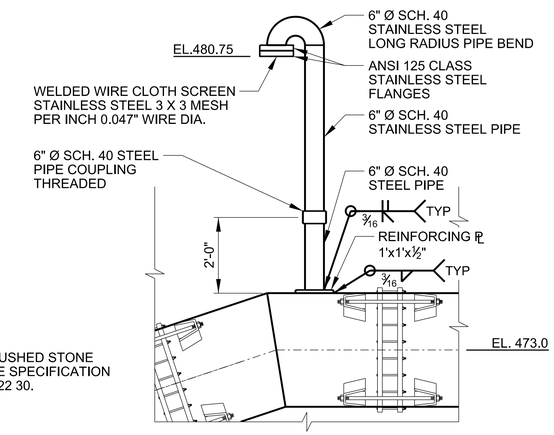

B5 VENT PIPE DETAIL

C-201

SCALE ½" = 1'-0"

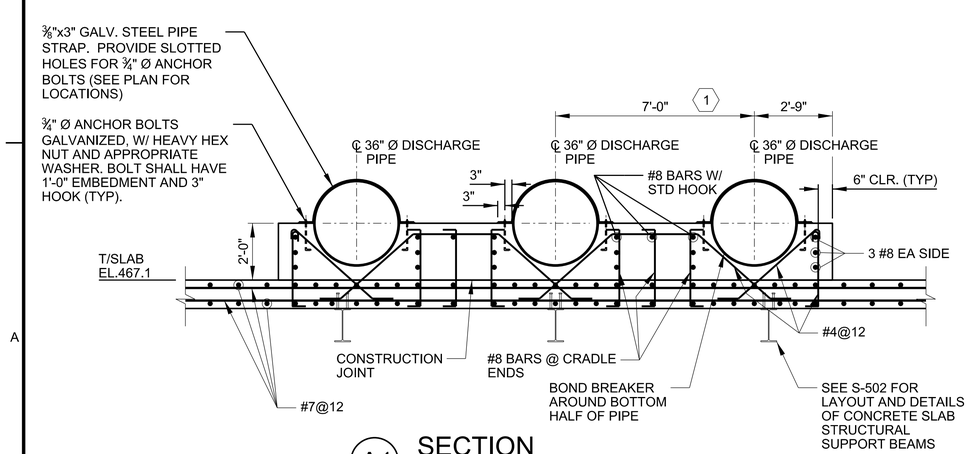

A1 SECTION

SCALE ⅜" = 1'-0"
A2 SIMILAR - SEE KEYNOTES

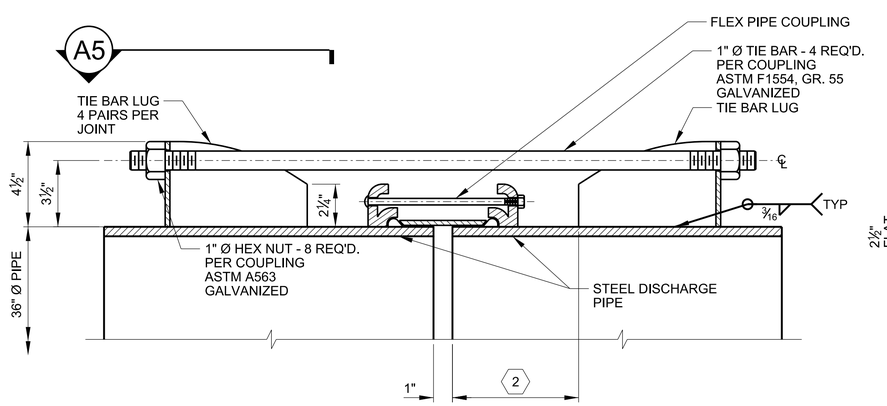

A3 STEEL PIPE JOINT DETAIL

C-201

SCALE 3" = 1'-0"

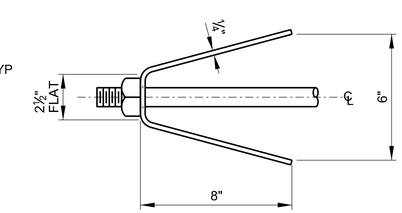

A5 TIE BAR LUG DETAIL

SCALE 3" = 1'-0"

GENERAL SHEET NOTES

1. ALL PIPE MITER BENDS SHALL BE IN ACCORDANCE WITH AWWA C208.

SHEET KEYNOTES

1. SECTION A2 IS SIMILAR TO SECTION A1 EXCEPT THE HORIZONTAL DISTANCE BETWEEN THE PIPES IS 6'-4" INSTEAD OF 7'-0".
2. SPACE LUGS TO PERMIT MIDDLE RING GASKET AND FOLLOWER OF FLEXIBLE COUPLING TO SLIDE BACK TO CLEAR END OF PIPE.
3. PIPE JOINT DETAIL TO BE USED FOR EACH CONNECTION BETWEEN INDIVIDUAL STEEL DISCHARGE PIPE SECTIONS (OVERALL VIEWS OF DISCHARGE PIPE SECTIONS FOUND ON C-201).
4. THE CELL FILL MATERIAL ABOVE EXISTING GRADE SHALL BE CRUSHED STONE. SEE S-502 FOR CELL FILL INSTALLATION REQUIREMENTS.
5. THE CONCRETE SLAB SHALL HAVE A COMPRESSIVE STRENGTH OF 4000 PSI BEFORE THE 2' CONCRETE CRADLE AND DISCHARGE PIPES ARE INSTALLED.

US Army Corps of Engineers®

MARK	DESCRIPTION	DATE	APPR.	MARK	DESCRIPTION	DATE	APPR.

U.S. ARMY CORPS OF ENGINEERS
ST. LOUIS DISTRICT
ST. LOUIS, MO 63103

DESIGNED BY: KYLE J. ARENTSEN, P.E.
DWN BY: BMM
CKD BY: AMCR
SUBMITTED BY: STEPHEN G. FARKAS, P.E.
PLOT SCALE: 1:1
PLOT DATE:
SIZE: ANSI D
FILE NAME: MOCH12_S-501.dgn
DATE: AUGUST 2013
SOLICITATION NO.: W912PS-13-R-0722
CONTRACT NO.: CONTRACT NO.
FILE NUMBER: MOC-012

MONARCH-CHESTERFIELD LEVEE DISTRICT
PUMP STATION NO. 7 LEVEE RAISE
MISSOURI RIVER
ST. LOUIS COUNTY, MISSOURI

STRUCTURAL
DISCHARGE CELL DETAILS

SHEET IDENTIFICATION
S-501

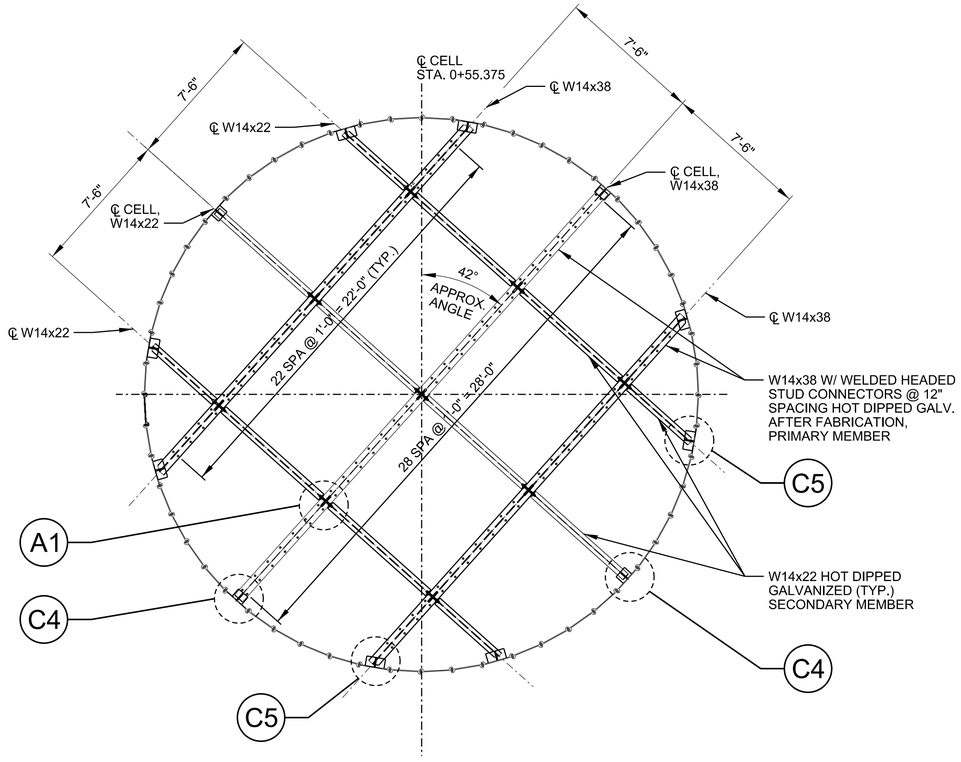

C1 CONCRETE SLAB SUPPORT BEAMS - PLAN
SCALE ¼" = 1'-0"
0 2' 4' 8'

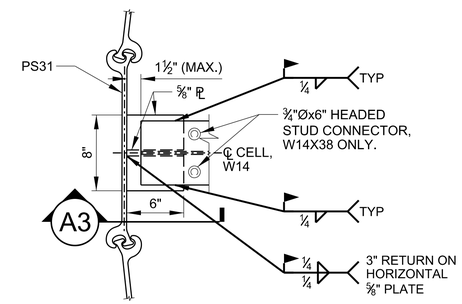

C4 DETAIL
SCALE 1½" = 1'-0"
0 ½' 1' 1½'

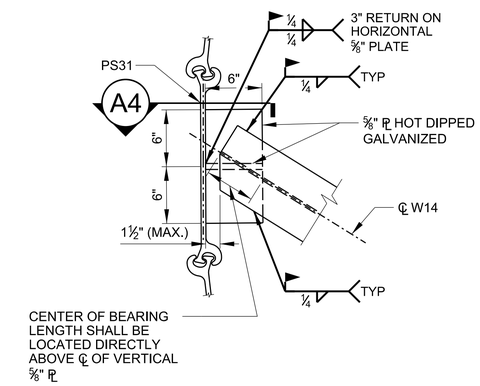

C5 DETAIL
SCALE 1½" = 1'-0"
ROTATED FOR CLARITY
0 ½' 1' 1½'

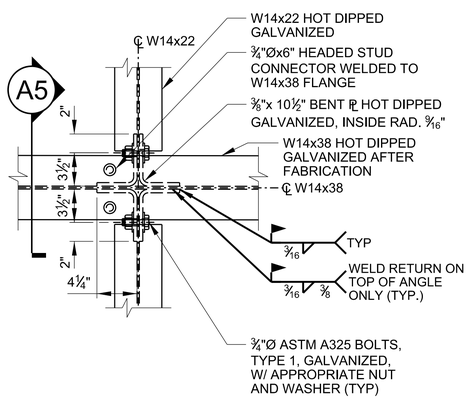

A1 DETAIL (TYPICAL 9 PLACES)
SCALE 1½" = 1'-0"
ROTATED FOR CLARITY
0 ½' 1' 1½'

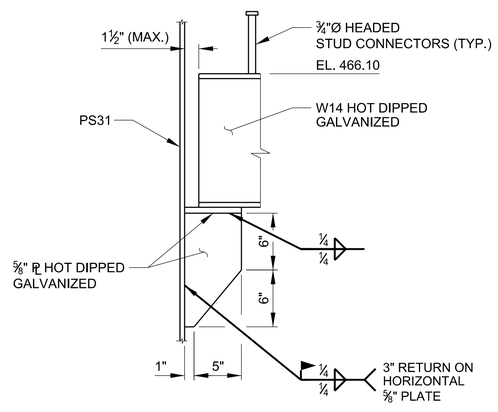

A3 SECTION
SCALE 1½" = 1'-0"
0 ½' 1' 1½'

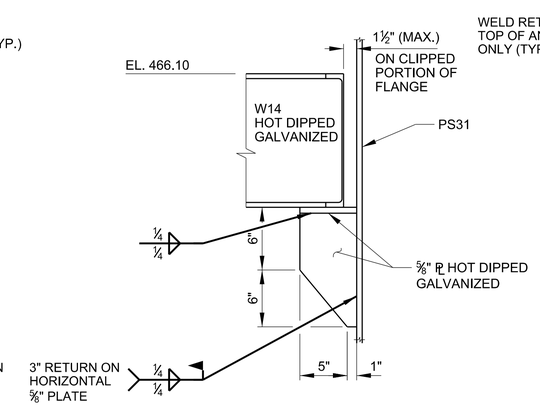

A4 SECTION
SCALE 1½" = 1'-0"
0 ½' 1' 1½'

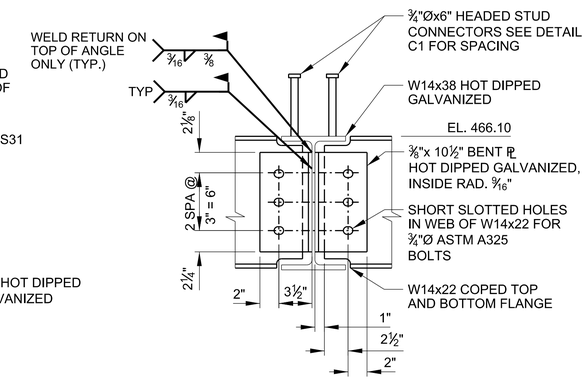

A5 SECTION
SCALE 1½" = 1'-0"
0 ½' 1' 1½'

GENERAL SHEET NOTES

1. THE DISCHARGE CELL SHALL BE FILLED WITH THE CRUSHED STONE TO AN ELEVATION TO FACILITATE INSTALLATION OF THE STIFFENED SEATED CONNECTIONS.
2. THE OUTSIDE W14x38 STIFFENED SEATED CONNECTIONS SHALL BE INSTALLED IN THE CENTER OF THE SHEET PILE THAT IS APPROXIMATELY 7'-6" PERPENDICULAR FROM THE CENTER W14x38.
3. THE OUTSIDE SECONDARY MEMBERS STIFFENED SEATED CONNECTION SHALL BE INSTALLED IN THE CENTER OF SHEET PILE THAT IS APPROXIMATELY 7'-6" PERPENDICULAR FROM CENTER SECONDARY MEMBER.
4. NDT SHALL BE PERFORMED ON THE INDICATED WELDS IN SECTION 05 51 00 AND SHALL BE TESTED IN ACCORDANCE WITH THE SPECIFICATIONS.
5. THE DISCHARGE CELL FILL SHALL THEN BE FILLED WITH THE CRUSHED STONE TO THE BOTTOM ELEVATION OF THE STEEL BEAMS.
6. A REPRESENTATIVE OF THE GOVERNMENT SHALL INSPECT THE CONNECTIONS AFTER ALL THE STEEL BEAMS ARE INSTALLED AND PRIOR TO THE CRUSHED STONE BEING INSTALLED TO ELEVATION 466.1.
7. CRUSHED STONE COMPACTION REQUIREMENTS SHALL BE PERFORMED IN ACCORDANCE WITH SPECIFICATION 32 22 30.

US Army Corps of Engineers®

MARK	DESCRIPTION	DATE	APPR.	MARK	DESCRIPTION	DATE	APPR.

U.S. ARMY CORPS OF ENGINEERS
ST. LOUIS DISTRICT
ST. LOUIS, MO 63103

DESIGNED BY: KYLE J. ARENTSEN, P.E.
DWN BY: BMM
CKD BY: AMCR
SUBMITTED BY: STEPHEN G. FARKAS, P.E.
PLOT SCALE: 1:1
PLOT DATE:
DATE: AUGUST 2013
SOLICITATION NO.: W912P9-13-R-0722
CONTRACT NO.: CONTRACT NO.
FILE NUMBER: 14A2016
SIZE: ANSI D
FILE NAME: MOCH172_S-502.dgn

MONARCH-CHESTERFIELD LEVEE DISTRICT
PUMP STATION NO. 7 LEVEE RAISE
MISSOURI RIVER
ST. LOUIS COUNTY, MISSOURI

STRUCTURAL
DISCHARGE CELL
CONCRETE SLAB SUPPORT BEAM DETAILS

SHEET IDENTIFICATION
S-502

WATERSHED #7 STANDARD OPEN SUMP CONFIGURATION TRIPLEX–FLYGT MODEL PL7061 ELECTRIC SUBMERSIBLE PUMP

PUMP ON/PUMP OFF ELEVATIONS

PUMP	PUMP ON	PUMP OFF
1	446.00	445.00
2	447.00	446.00
3	448.00	442.00

SURVEY CONTROL POINTS

POINT	COORDINATES NORTHING	COORDINATES EASTING	ELEV.	DESCRIPTION
T–1	1029402.590	786629.889	472.15	CHISELED "+" TOP CONC. FOUNDATION
T–3	1029651.867	786827.942	474.20	CHISELED "+" TOP CONC. GATE VALVE
CP–1	1029753.979	786792.280	--	OUTSIDE CORNER OF INLET STRUCTURE
CP–2	1029790.614	786719.014	--	OUTSIDE CORNER OF INLET STRUCTURE
CP–3	1029677.115	786918.009	--	CENTER OF 3–36" OUTLET PIPES
CP–4	1029665.205	786679.140	--	DROP STRUCTURE
CP–5	1029644.899	786699.212	--	DROP STRUCTURE
CP–6	1029736.153	786891.064	--	℄ ASPHALT ACCESS ROAD
CP–7	1029737.941	786892.153	--	℄ ASPHALT ACCESS ROAD
CP–8	1029786.944	786877.880	--	℄ ASPHALT ACCESS ROAD
CP–9	1029803.278	786863.067	--	℄ ASPHALT ACCESS ROAD

NOTES:
1. PLACE RIP–RAP WITH FILTER FABRIC TO CONTOUR ELEVATION AS SHOWN.
2. PUMP NO. 1 TO BE LOCATED IN CENTER SUMP BAY.
3. ALL SLOPES 3H:1V OR STEEPER SHALL RECEIVE SOD. ALL OTHER DISTURBED AREAS SHALL BE SEEDED.
4. ADDITIVE ALTERNATE ITEMS ARE IDENTIFIED WITH "AA" FOLLOWED BY WATERSHED AND GROUP NUMBER.

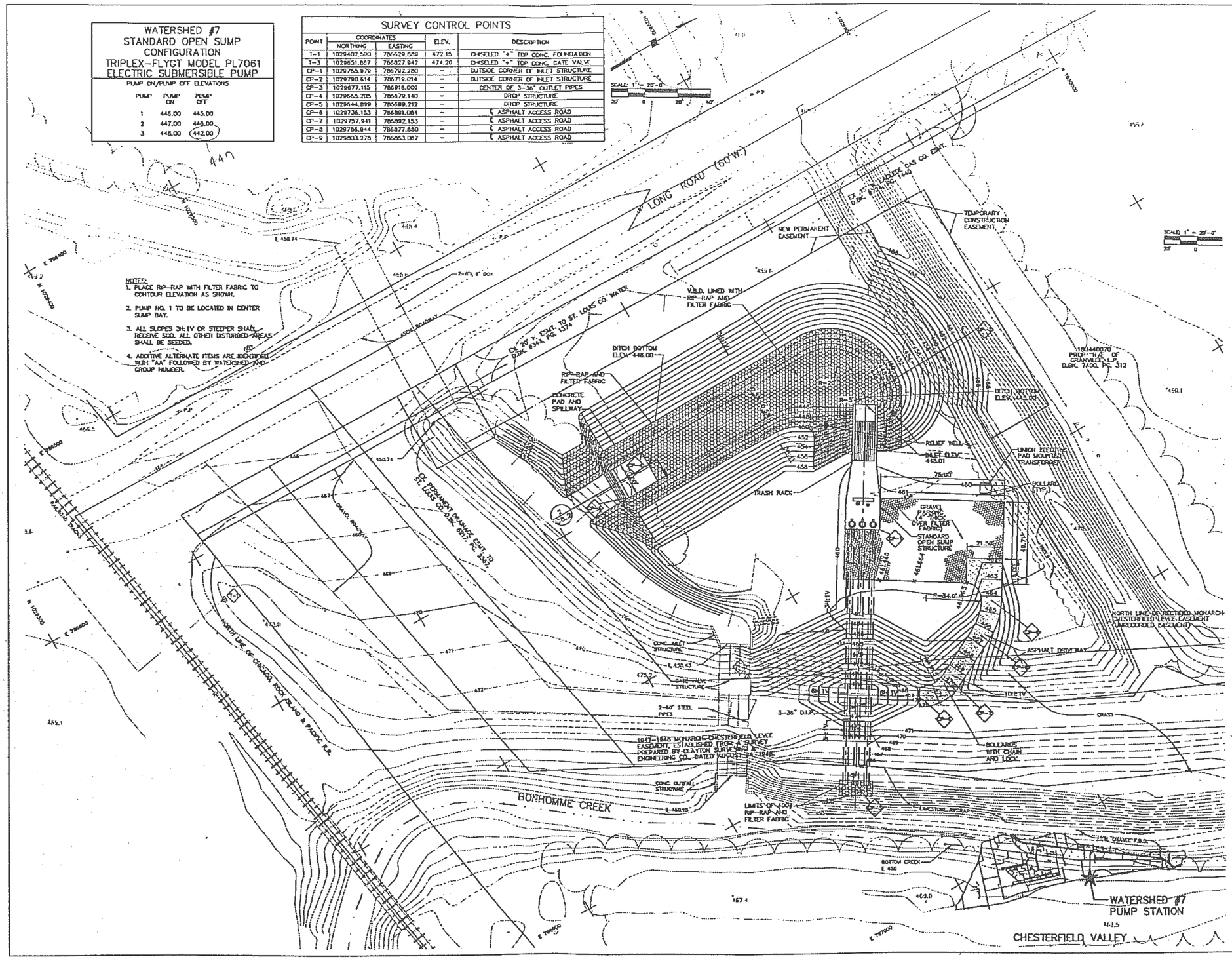

Booker Engineers Architects Planners
1126 Ohio Street, St. Louis, Missouri 63118

CHESTERFIELD VALLEY PUMP STATIONS
CHESTERFIELD, MO 63005

City of Chesterfield
690 Chesterfield Parkway, Chesterfield, Mo 63017
Phone (314) 537-4000

MARK	DESCRIPTION	DATE	APPR.

MARK	DESCRIPTION	DATE	APPR.

NO.	DRAWN	CHKD.	APPR.	DESCRIPTION	DATE
1	MLM	MTB	MWE	SHEET REDESIGNED	5/19/94
2	MLM	MTB	MWE	SHEET REDESIGNED	5/19/94

SITE PLAN
WATERSHED #7
SCALE: AS SHOWN

PROJECT NO. T3872

DATE: 8/88/88
DRAWN: M.L.M.
CHKD.: M.T.B.
APPD.: M.W.E.

DRAWING NO. C7.1
12 OF 33

US Army Corps of Engineers®

DESIGNED BY: N/A
DWN BY: N/A
CKD BY: JAM
SUBMITTED BY: GARY J. LEE, P.E.
PLOT SCALE: 1:1
PLOT DATE: N/A
SIZE: ANSI D
FILE NAME: MDCH12_R-001.dgn
DATE: AUGUST 2013
SOLICITATION NO.: W912P9-13-R-0722
CONTRACT NO.: CONTRACT NO.
FILE NUMBER: N/A
FILE NUMBER: MDCH12

U.S. ARMY CORPS OF ENGINEERS
ST. LOUIS DISTRICT
ST. LOUIS, MO 63103

MONARCH-CHESTERFIELD LEVEE DISTRICT
PUMP STATION NO. 7 LEVEE RAISE
MISSOURI RIVER
ST. LOUIS COUNTY, MISSOURI

RESOURCE
REFERENCE DRAWING

SHEET IDENTIFICATION
R-001

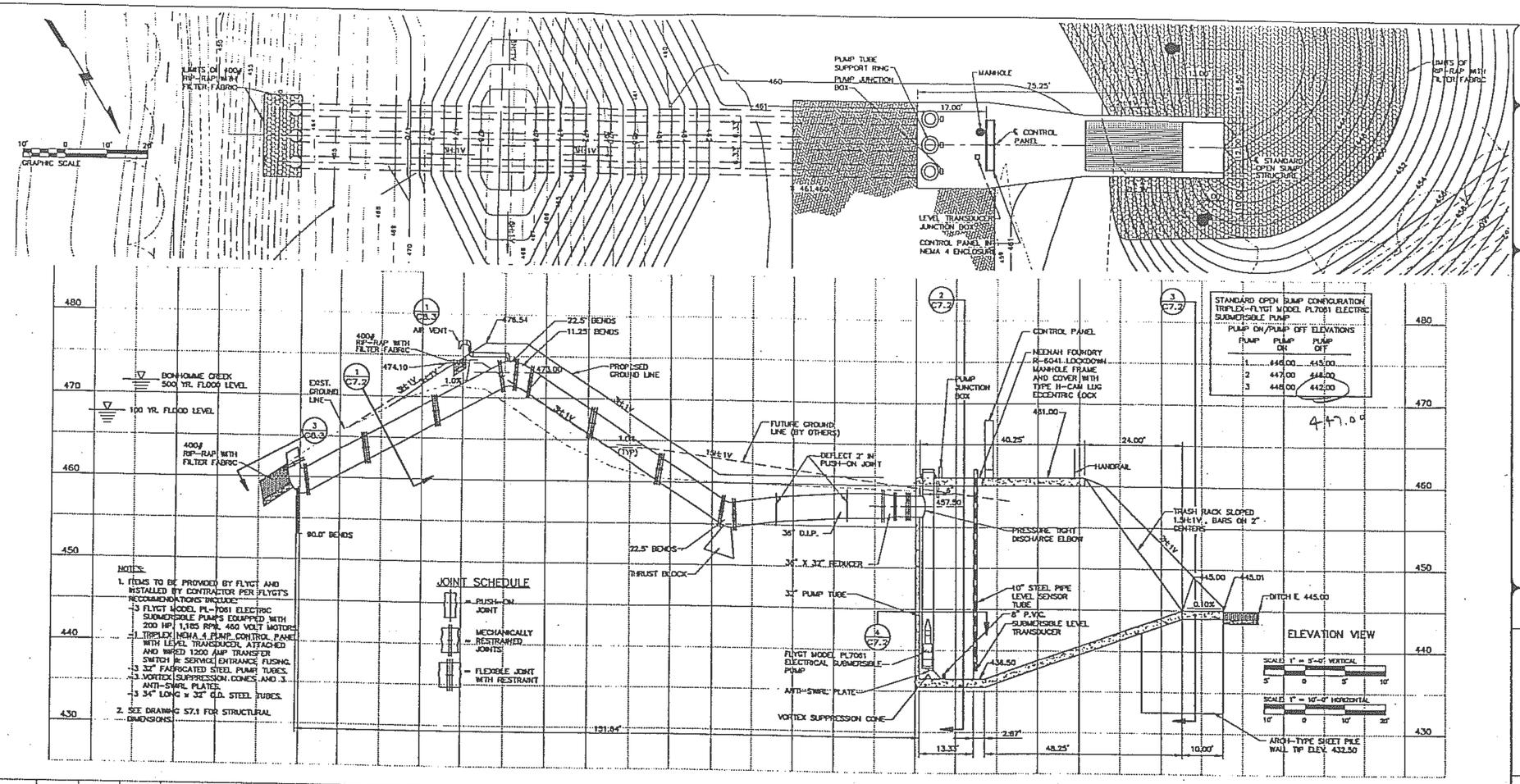

STANDARD OPEN SUMP CONFIGURATION TRIPLEX-FLYGT MODEL PL7061 ELECTRIC SUBMERSIBLE PUMP		
PUMP ON/PUMP OFF ELEVATIONS		
PUMP	PUMP ON	PUMP OFF
1	446.00	443.00
2	447.00	444.00
3	448.00	442.00

447.0

Booker Engineers Architects Planners
1136 Olive Street, St. Louis, Missouri 63101

City of Chesterfield
690 Chesterfield Pkwy W, Chesterfield, Mo 63017
Phone (314) 537-4000

CHESTERFIELD VALLEY PUMP STATIONS
CHESTERFIELD, MO 63005

MARK	DESCRIPTION	DATE	APPR.	MARK	DESCRIPTION	DATE	APPR.

NO.	DRAWN	CHKD.	APPD.	DESCRIPTION	DATE
	MLM	MTB	MWE	SHEET REVISED	8/15/13
	MLM	MTB	MWE	SHEET REVISED	4/25/14

PLAN AND PROFILE
WATERSHED #7
SCALE: AS NOTED

PROJECT NO. T3872
DATE: 2/25/96
DRAWN: M.L.MO.
CHKD.: M.T.B.
APPD.: M.W.E.
DRAWING NO. C7.2
13 OF 32

DESIGNED BY: N/A
DWN BY: N/A
CKD BY: JAM
SUBMITTED BY: GARY J. LEE, P.E.
PLOT SCALE: 1:1
PLOT DATE:
SIZE: ANSI D
FILE NAME: MOCH12_R-002.dgn
DATE: AUGUST 2013
SOLICITATION NO.: W912P8-13-R-0722
CONTRACT NO.: CONTRACT NO.
FILE NUMBER: MOCH12

U.S. ARMY CORPS OF ENGINEERS
ST. LOUIS DISTRICT
ST. LOUIS, MO 63103

US Army Corps of Engineers®

MONARCH-CHESTERFIELD LEVEE DISTRICT
PUMP STATION NO. 7 LEVEE RAISE
MISSOURI RIVER
ST. LOUIS COUNTY, MISSOURI
RESOURCE
REFERENCE DRAWING

SHEET IDENTIFICATION
R-002

CITY OF CHESTERFIELD
MONARCH CHESTERFEILD
LEVEE TRAIL PHASE V
CHESTERFIELD, MISSOURI

ABBREVIATIONS

ACRE	AC	END VERTICAL CURVE STATION	EVCS	RADIUS	R
ADJUST TO GRADE	ATG	EXISTING	EX	REINFORCED CONCRETE PIPE	RCP
ADJUST TO GRADE BY OTHERS	ATGBO	FLARED END SECTION	FES	REMOVE	(R)
AHEAD	AH	FLAT BOTTOM DITCH	FBD	REMOVE AND REPLACE	(R&R)
AREA INLET	AI	GAS METER	GM	RIGHT	R OR RT
ASPHALT	ASPH	GAS VALVE	GV	RIGHT-OF-WAY	ROW
BACK	BK	GRATED INLET	GI	SHOULDER	SHLD
BEGINNING VERTICAL CURVE ELEVATION	BVCE	INTERMITTENT WHITE PAINT	IW	STATION	STA
BEGINNING VERTICAL CURVE STATION	BVCS	INTERMITTENT YELLOW PAINT	IY	SOLID WHITE PAINT	SW
BENCHMARK	BM	INVERT	INV	SOLID YELLOW PAINT	SY
BITUMINOUS	BIT	IRON PIN OR PIPE	IP	STOP BAR	SB
CONCRETE	CONC	LEFT	L OR LT	TELEPHONE	TELE
CORRUGATED METAL PIPE	CMP	LENGTH OF VERTICAL CURVE	LVC	TELEPHONE BOX	TB
CROSSWALK PAINT	CW	LIGHT POLE	LP	TELEPHONE POLE	TP
CURB INLET	CI	MAILBOX	MB	TO BE ABANDONED	(TBA)
CURB AND GUTTER	C&G	MANHOLE	MH	TO BE ABANDONED AND FILLED	(TBA&F)
DO NOT DISTURB	DND	NOT TO SCALE	NTS	TO BE REMOVED BY OTHERS	(TBR)
DOUBLE CURB INLET	DCI	POINT OF CURVATURE	PC	TO BE REMOVED AND REPLACED BY OTHERS	(TBR&R)
DOUBLE SOLID YELLOW PAINT	DY	POINT OF INTERSECTION	PI	TYPICAL	TYP
DRIVEWAY	DRV	POINT OF TANGENCY	PT	VERTICAL CURVE	VC
EACH	EA	POINT OF VERTICAL INTERSECTION	PVI	USE IN PLACE	(UIP)
EDGE OF PAVEMENT	EOP	PORTLAND CEMENT CONCRETE	PCC	WATER METER	WM
ELEVATION	ELEV	POWER POLE	PP	WATER VALVE	W
END VERTICAL CURVE ELEVATION	EVCE	PROPOSED	PR		

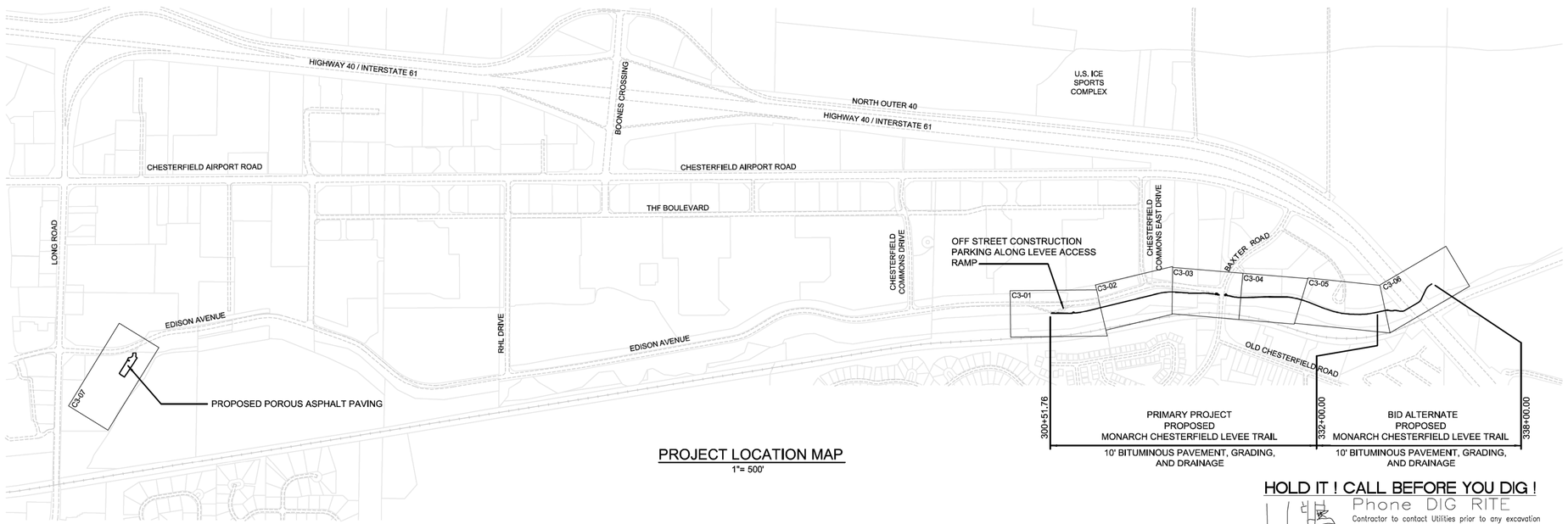

PROJECT LOCATION MAP
1"= 500'

HOLD IT ! CALL BEFORE YOU DIG !

Phone DIG RITE

Contractor to contact Utilities prior to any excavation or demolition for the location of any pipes, cables, lines or mains. The Contractor shall also coordinate any disconnection required with the various utility companies and/or governmental agencies serving the site.

Underground Cable

Toll Free 800/344-7483
800-DIG-RITE

CONVENTIONAL SIGNS (USED IN PLANS)

DESCRIPTION	EXISTING	NEW
RIGHT-OF-WAY	EX ROW	PR ROW
PROPERTY LINE		
CITY LIMITS		
PERMANENT UTILITY EASEMENT		PR UTIL EASE
PERMANENT DRAINAGE EASEMENT		PDE
TEMPORARY SLOPE & CONSTRUCTION LICENSE		TEMP CONST EASE
UTILITY POLE (TYPE SPECIFIED)	PP	PP
UNDERGROUND CONDUIT OR CABLE (TYPE SPECIFIED)		
UTILITY MANHOLE (TYPE SPECIFIED)		
TRAFFIC SIGNAL		
TRAFFIC CONTROLLER		
TRAFFIC PULL BOX		
PIPE LINE (OWNER SPECIFIED)	SHELL	
UTILITY MAIN (SIZE & TYPE SPECIFIED)	4"G	
GAS & WATER VALVE		
GAS & WATER SERVICE VALVE	G.S.V. W.S.V.	
WATER METER	W.M.	
SEWER VENT	S.V.	
FIRE HYDRANT		
SANITARY SEWER	8" PVC	8" PVC
STORM SEWER	18" RCP	18" RCP
SANITARY SEWER MANHOLE	S	S

DESCRIPTION	EXISTING	NEW
GRATED INLET		
CURB INLET (SINGLE)		
CURB INLET (6')		
IDENT. OF NEW OR MOD. DRAINAGE STRUCT.	1-1EX	1-31CI
IDENT. OF NEW OR MOD. SANITARY STRUCT.	A	1
DRAINAGE V-DITCH		
DRAINAGE FLAT BOTTOM DITCH		
SLOPE LIMITS		SL
SILT FENCE		SF
CONCRETE PAVMENT		
ASPHALTIC CONCRETE PAVEMENT		
PAVEMENT REMOVAL		
TREE OR SHRUB (DESIGNATE DIA.)	14"	
TREE LINE		
FENCE		
GUARDRAIL		
SIGN		
SOIL BORING SYMBOL		
BUILDING		
BUILDING REMOVAL		
MAILBOX	MB	

GENERAL SYMBOLS

1 — SECTION CUT OR DETAIL WITH VIEW SHOWN ON SAME DRAWING

1/C1-01 — SECTION CUT OR DETAIL WITH VIEW SHOWN ON DIFFERENT DRAWING

LENGTH OF PROJECT

MONARCH CHESTERFIELD LEVEE TRAIL

BEGINNING OF PRIMARY PROJECT	STA. 300+51.76	3148.24	FEET
END OF PRIMARY PROJECT	STA. 332+00.00		
BEGINNING OF BID ALTERNATE	STA. 332+00.00	600	FEET
END OF BID ALTERNATE	STA. 338+00.00		
APPARENT LENGTH		3,748.24	FEET
EQUATIONS AND EXCEPTIONS		0	FEET
TOTAL CORRECTIONS		0	FEET
NET LENGTH OF PROJECT		3,748.24	FEET
		0.710	MILES

INDEX OF SHEETS

SHEET NO.	DESCRIPTION
C0-01	COVER SHEET
C1-01	TYPICAL SECTIONS
C2-01	GENERAL NOTES AND SUMMARY OF QUANTITIES
	PLAN AND PROFILE
C3-01 TO C3-06	MONARCH CHESTERFIELD LEVEE TRAIL
C3-07	PROPOSED POROUS ASPHALT PAVING
C4-01	COORDINATE POINTS
C5-01 TO C5-03	DETAILS
C7-01 TO C7-02	STORM WATER POLLUTION PREVENTION PLAN
	TRAFFIC SIGNAL PLANS
C9-01 TO C9-02	BAXTER ROAD AND EDISON AVENUE
	CROSS SECTIONS
C12-01 TO C12-08	MONARCH CHESTERFIELD LEVEE TRAIL

HT#2087 MSD P-0029491-00 BASEMAPS: 17U, 17T

MONARCH CHESTERFIELD LEVEE TRAIL PHASE V

City of Chesterfield

Kuhlmann design Group, Inc.
66 Progress Parkway
St. Louis, Missouri 63043-3706
Tel: 314.434.8898 Fax: 314.434.8280
St. Louis, MO • Belleville, IL

KdG

DISCLAIMER OF RESPONSIBILITY

I hereby specify that the documents intended to be authenticated by my seal are limited to this sheet, and I hereby disclaim any responsibility for all other Drawings, Specifications, Estimates, Reports or other documents or instruments relating to or intended to be used for any part or parts of the architectural or engineering project or survey.

CIVIL
MISSOURI ARCHITECTURAL CORPORATION CERTIFICATE LIC. NO.: 000216
MISSOURI PROFESSIONAL ENGINEERING CORPORATION CERTIFICATE LIC. NO.: 000255
MISSOURI PROFESSIONAL LAND SURVEY CORPORATION CERTIFICATE LIC. NO.: 000078

NO.	DATE	
1	08/21/2012	SLCo COMMENTS

PROJECT NO. 050119	CONTRACT NO. 0002
DRAWN JMJ	CHECKED CDF2
DATE: JULY 18, 2012	

COVER SHEET

SHEET 1 OF 26

C0-01

Copyright © 2008 Kuhlmann Design Group, Inc. All Rights Reserved

US Army Corps of Engineers®

MARK	DESCRIPTION	DATE	APPR.

MARK	DESCRIPTION	DATE	APPR.

U.S. ARMY CORPS OF ENGINEERS
ST. LOUIS DISTRICT
ST. LOUIS, MO 63103

DESIGNED BY: N/A		DATE: AUGUST 2013
DWN BY: N/A	CKD BY: JAM	SOLICITATION NO.: W912P9-13-R-0722
SUBMITTED BY: GARY J. LEE, P.E.		CONTRACT NO.: CONTRACT NO.
PLOT SCALE:	PLOT DATE:	FILE NUMBER: MDC012
SIZE: ANSI D	FILE NAME: MDCH12_R-003.dgn	

MONARCH-CHESTERFIELD LEVEE DISTRICT
PUMP STATION NO. 7 LEVEE RAISE
MISSOURI RIVER
ST. LOUIS COUNTY, MISSOURI

RESOURCE
REFERENCE DRAWING

SHEET IDENTIFICATION
R-003

August 21, 2012 9:00 AM
J:\050119\050119 Monarch Chesterfield Levee Trail\DGN\CD\Sheet 003_C0-01.dwg

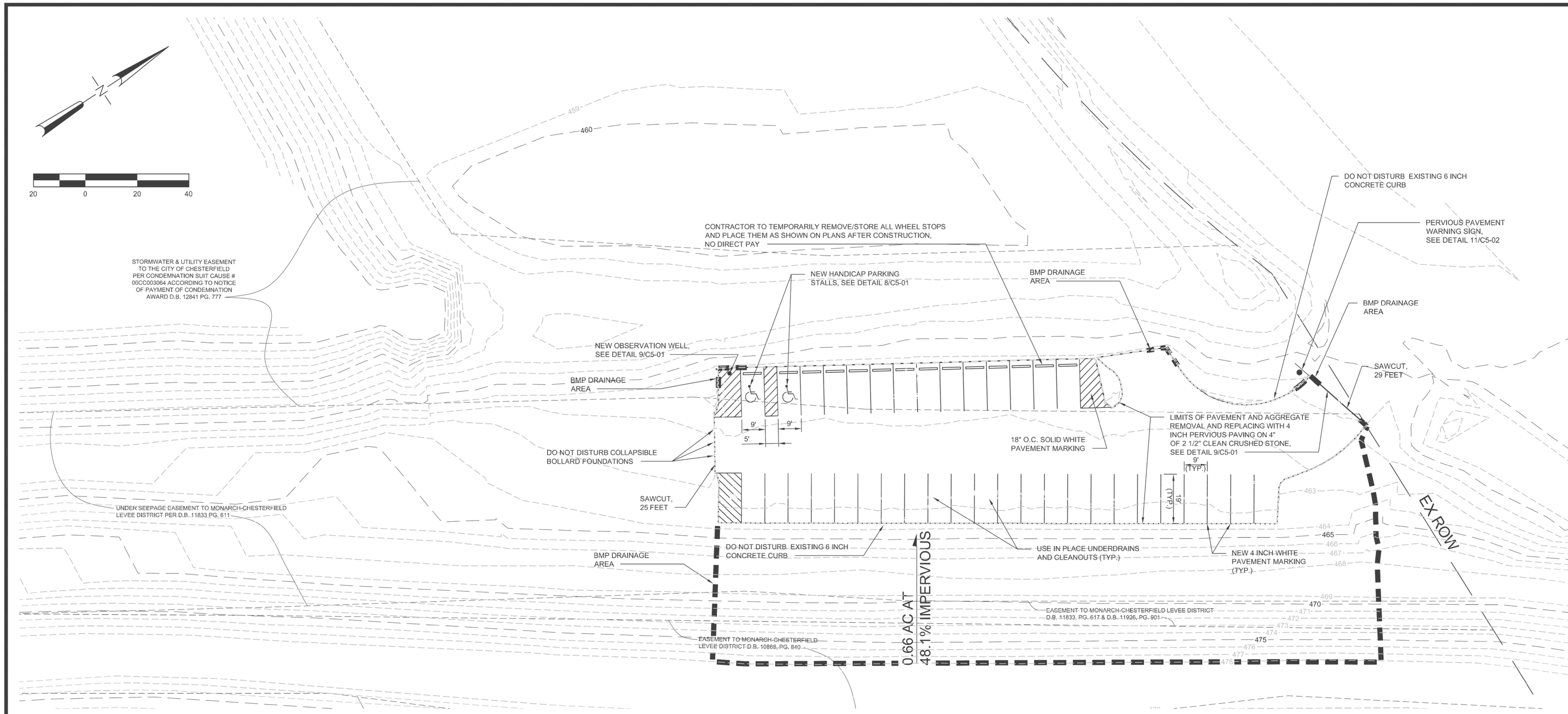

POROUS ASPHALT PLAN NOTES

1. THE CONTRACTOR SHALL VERIFY THAT THE POROUS ASPHALT PRODUCER THAT WILL SUPPLY THE POROUS ASPHALT FOR THIS PROJECT HAS BEEN PREQUALIFIED BY MSD. THE NAME OF THE PRODUCER AND THEIR FACILITY LOCATION SHALL BE PROVIDED TO THE MSD DIVISION INSPECTOR PRIOR TO CONSTRUCTION.
2. IF POROUS PAVEMENT AREA IS USED FOR TEMPORARY SEDIMENT BASIN DURING CONSTRUCTION, THE BED SHALL BE EXCAVATED AT LEAST ONE FOOT ABOVE THE FINAL ELEVATION OF THE BED. AFTER THE SEDIMENT IS REMOVED, THE BED SHALL BE EXCAVATED TO FINAL GRADE BEFORE THE INSTALLATION OF THE POROUS PAVEMENT SYSTEM.
3. CONSTRUCT POROUS PAVEMENT LATE IN THE PROJECT SCHEDULE SO THAT ALL OF THE DIRTY WORK SUCH AS GRADING AND LANDSCAPING IS COMPLETED FIRST. POROUS PAVEMENT AND THE STONE BED SHALL NOT BE INSTALLED UNTIL ALL AREAS TRIBUTARY TO IT ARE ESTABLISHED.
4. POROUS PAVEMENTS MUST BE PROTECTED FROM SEDIMENT DURING AND AFTER THE PAVING PROCESS. AT NO TIME SHALL SEDIMENT OR OTHER MATERIAL CAPABLE OF CLOGGING THE SURFACE BE ALLOWED TO CONTACT THE PAVEMENT.
5. ANY GRADE ADJUSTING REQUIRING FILL SHALL BE DONE USING AN OPEN-GRADED MATERIAL, SUCH AS THE STONE SUBBASE.
6. MSD TYPE 4 FILTER FABRIC SHALL BE USED ON THE SIDES OF THE STONE BED.
7. STONE FOR STORAGE BED SHALL BE 2.5" CLEAN CRUSHED STONE WITH MINIMUM 12" THICK STORAGE BED.
8. PLACE AGGREGATE FOR THE STONE RECHARGE BED WITH CARE (NOT TO DAMAGE THE FILTER FABRIC). AGGREGATE SHOULD BE DUMPED AT THE EDGE OF THE BED AND PLACED IN LAYERS OF 8 TO 12 INCHES USING TRACK EQUIPMENT. COMPACT EACH LIFT WITH A SINGLE PASS OF A STATIC STEEL WHEEL ROLLER. VIBRATOR PLATE COMPACTOR MAY BE USED FOR AREAS THAT CANNOT BE COMPACTED WITH THE STEEL WHEEL ROLLER.
9. A THIN CHOKER COURSE LAYER EVENLY PLACED OVER THE STORAGE BED IS OPTIONAL. THE GRADATION OF THE CHOKER COURSE SHOULD BE SELECTED BASED ON THE GRADATION OF THE STORAGE BED. IF AASHTO NO.3 IS USED FOR THE STORAGE BED, THEN AASHTO NO. 57 IS ACCEPTABLE FOR THE CHOKER COURSE.
10. POROUS ASPHALT SHALL BE TRANSPORTED IN COVERED, CLEAN DUMP BEDS THAT HAVE BEEN SPRAYED A NON-PETROLEUM RELEASE AGENT OR SOAP SOLUTION TO PREVENT THE MIXTURE FROM ADHERING TO THE DUMP BEDS. MINERAL FILLER, FINE AGGREGATE, SLAG DUST, ETC. SHALL NOT BE USED TO DUST TRUCK BEDS.
11. HAUL DISTANCES SHALL BE LIMITED TO 35 MILES UNLESS APPROVED IN ADVANCE BY THE ENGINEER. POROUS ASPHALT SHALL BE PLACED WITHIN 90 MINUTES OF BEING LOADED.
12. THE POROUS ASPHALT IS PLACED IN 2-INCH TO 4-INCH THICK LIFTS USING TRACK PAVERS AND NORMALLY COMPACTED WITH ONLY A FEW (1-4) PASSES OF A 10-TON STATIC ROLLER.
13. TRAFFIC SHALL BE RESTRICTED FOR THE FIRST 48 HOURS OR UNTIL THE PLACED MATERIAL HAS BEEN ALLOWED TO COOL BELOW 100° F. USE OF WATER TO COOL THE PAVEMENT IS NOT PERMITTED.
14. POROUS ASPHALT SHALL NOT BE PLACED WHEN THE AMBIENT AIR TEMPERATURE OF THE PAVEMENT SITE IN THE SHADE AWAY FROM ARTIFICIAL HEAT IS BELOW 60° F OR WHEN THE ACTUAL GROUND TEMPERATURE IS BELOW 50° F. THE CONTRACTOR SHALL NOT PAVE ON DAYS WHEN RAIN IS FORECAST.
15. THE FULL PERMEABILITY OF THE PAVEMENT SURFACE SHALL BE TESTED BY APPLICATION OF CLEAN WATER AT THE RATE OF 5 GPM OVER THE SURFACE, USING A HOSE OR OTHER DISTRIBUTION DEVICE. ALL APPLIED WATER SHALL INFILTRATE DIRECTLY WITHOUT LARGE PUDDLE FORMATION OR SURFACE RUNOFF AND SHALL BE OBSERVED BY THE CERTIFYING ENGINEER OR HIS REPRESENTATIVE.
16. DO NOT CLEAN THE POROUS ASPHALT PAVEMENT SURFACE WITH HIGH PRESSURE HOSES OR ABRASIVES. WHEN CLEANING IS NECESSARY, COMBINATION CLEANING MACHINES THAT COMBINE A WET SPRAY AND VACUUM PROCESS HAS BEEN FOUND TO BE EFFECTIVE.
17. A PERMANENT SIGN SHALL BE POSTED WARNING THAT CARE SHOULD BE TAKEN DURING SNOW PLOWING; AND PROHIBIT THE FOLLOWING: RESURFACING, THE USE OF SAND ABRASIVES FOR WINTER TIRE TRACTION, AND THE USE OF POWER WASHERS.
18. AT COMPLETION OF THE PROJECT, PRIOR TO FINAL DEDICATION, AN AS-BUILT CERTIFICATION, SIGNED AND SEALED BY A MISSOURI PROFESSIONAL ENGINEER SHALL BE PROVIDED.

MAINTENANCE NOTES

1. MAINTENANCE PERSONNEL: DO NOT SEAL-COAT THE POROUS PAVEMENT.
2. DO NOT USE SAND OR ASH FOR CONTROL OF SNOW AND ICE.
3. INSPECT THE POROUS PAVEMENTS SEVERAL TIMES IN THE FIRST FEW MONTHS AFTER CONSTRUCTION, AND AT LEAST ANNUALLY THEREAFTER.
4. INSPECTION SHOULD BE CONDUCTED AFTER RAIN STORMS TO CHECK FOR SURFACE PONDING THAT MIGHT INDICATE POSSIBLE CLOGGING.
5. SEMI-ANNUAL VACUUM SWEEPING IS RECOMMENDED TO PREVENT CLOGGING.
6. NON-POROUS PATCHING SHALL NOT EXCEED 10 PERCENT OF THE PAVED AREA.
7. DO NOT STORE SOIL OR OTHER MATERIAL CAPABLE OF CLOGGING THE SURFACE ON OR ADJACENT TO POROUS PAVEMENT.

POROUS ASPHALT PRODUCER'S PREQUALIFICATION

THE POROUS ASPHALT MANUFACTURER SHALL BE RESPONSIBLE FOR ESTABLISHING AND MAINTAINING A QUALITY CONTROL PROGRAM. PRIOR TO USE ON PROJECTS REQUIRING MSD APPROVAL, THE MANUFACTURE SHALL SUBMIT FIVE (5) COPIES OF A COMPLETED PERVIOUS PAVING APPLICATION AS WELL AS DOCUMENTATION DESCRIBING THE QUALITY CONTROL PROGRAM. THE COMPLETED APPLICATION AND OTHER

DOCUMENTATION SHALL BE SUBMITTED TO:
MSD BMP COMMITTEE
METROPOLITAN ST. LOUIS SEWER DISTRICT
2350 MARKET STREET
ST. LOUIS, MISSOURI 63103-2555

MATERIAL CERTIFICATION AND QUALITY CONTROL

THE CONTRACTOR SHALL OBTAIN THE POROUS ASPHALT MANUFACTURER'S CERTIFICATION THAT THE POROUS ASPHALT HAS BEEN APPROVED BY MSD. THIS CERTIFICATION SHALL BE PROVIDED TO THE MSD DIVISION INSPECTOR. THE CERTIFICATION SHALL INCLUDE THE MANUFACTURER'S NAME, AND STATE THAT THE POROUS ASPHALT HAS BEEN APPROVED BY MSD AND THAT THE PAVING MATERIALS MEET ALL REQUIREMENTS AS EVALUATED UNDER THE MANUFACTURER'S QUALITY CONTROL PROGRAM.

CONTRACTOR PREQUALIFICATION

PRIOR TO OBTAINING A CONSTRUCTION PERMIT FROM MSD TO CONSTRUCT THE POROUS ASPHALT FOR A GIVEN PROJECT, THE ENGINEER PROVIDING AS-BUILT CERTIFICATION SHALL VERIFY THAT THE INSTALLING CONTRACTOR HAS PAST HISTORY DEMONSTRATING EXPERIENCE AND/OR TRAINING IN INSTALLING POROUS ASPHALT.

AS-BUILT CERTIFICATION

AT COMPLETION OF THE PROJECT, PRIOR TO FINAL DEDICATION, AN AS-BUILT CERTIFICATION, SIGNED AND SEALED BY A MISSOURI PROFESSIONAL ENGINEER, SHALL BE PROVIDED CERTIFYING:

1. THE POROUS ASPHALT SYSTEM WAS BUILT AS DESIGNED.
2. THE POROUS ASPHALT SYSTEM WAS INSTALLED BY A QUALIFIED CONTRACTOR.
3. THE POROUS ASPHALT SYSTEM INSTALLATION WAS WITNESSED BY THE CERTIFYING ENGINEER OR A REPRESENTATIVE UNDER HIS DIRECT SUPERVISION.
4. INFILTRATION TESTING SHALL BE PERFORMED ON THE EXISTING BASE ROCK LAYER AFTER THE REMOVAL OF THE TOP 4". IF THE OBSERVED INFILTRATION RATE IS <6"/HR, ADDITIONAL LAYERS OF THE EXISTING BASE ROCK SHALL BE REMOVED TO THE DEPTH (UP TO AND INCLUDING FULL DEPTH REPLACEMENT) AT WHICH A MINIMUM INFILTRATION RATE OF 6"/HR IS OBSERVED. OWNER'S ENGINEER SHALL BE ONSITE TO ENSURE TESTING IS PERFORMED PER INDUSTRY STANDARDS, AND SHALL CERTIFY THAT THE DESIRED RATE HAS BEEN ACHIEVED. (1)

TOTAL DISTURBED AREA:			0.32 ACRES
EXISTING IMPERVIOUS COVERAGE:			0.00 ACRES (0.0%)
PROPOSED IMPERVIOUS COVERAGE:			0.32 ACRES (48.1%)
EXISTING RUNOFF:	0.66 @ 1.70 CFS/AC =		1.12 CFS
PROPOSED RUNOFF:	0.32 @ 3.54 CFS/AC + 0.34 @ 1.70 CFS/AC =		1.71 CFS
DIFFERENTIAL RUNOFF:	1.71 CFS - 1.12 CFS =		0.59 CFS

FLOOD PROTECTION IS NOT REQUIRED
CHANNEL PROTECTION IS NOT REQUIRED

STORMWATER MANAGEMENT NOTE:
LAND AREA DISTURBED: 0.32 ACRES

ANY FUTURE LAND DISTURBANCE AND/OR INCREASE IN IMPERVIOUS AREA ON THIS SITE REQUIRES ADDITIONAL STORM WATER MANAGEMENT PER MSD REGULATIONS IN PLACE AT THAT TIME.

MONARCH CHESTERFIELD LEVEE TRAIL PHASE V

City of Chesterfield

KdG
Kuhlmann *design* Group, Inc.
66 Progress Parkway
St. Louis, Missouri 63043-3706
Tel: 314.434.8898 Fax: 314.434.8280
St. Louis, MO • Belleville, IL

DISCLAIMER OF RESPONSIBILITY
I hereby specify that the documents intended to be authenticated by my seal are limited to this sheet, and I hereby disclaim any responsibility for all other Drawings, Specifications, Estimates, Reports or other documents or instruments relating to or intended to be used for any part or parts of the architectural or engineering project or survey.

CIVIL
MISSOURI ARCHITECTURAL CORPORATION CERTIFICATE LIC. NO.: 000216
MISSOURI PROFESSIONAL ENGINEERING CORPORATION CERTIFICATE LIC. NO.: 000255
MISSOURI PROFESSIONAL LAND SURVEY CORPORATION CERTIFICATE LIC. NO.: 000078

NO.	DATE	
1	08/21/2012	SLCo COMMENTS

PROJECT NO. 050119	CONTRACT NO. 0002
DRAWN JMU	CHECKED CDF2
DATE: JULY 18, 2012	

PLAN
PERVIOUS
PAVEMENT

SHEET 10 OF 26

C3-07

Copyright © 2008 Kuhlmann Design Group, Inc. All Rights Reserved

HT#2087 MSD P-0029491-00 BASEMAPS: 17U, 17T

US Army Corps of Engineers®

MARK	DESCRIPTION	DATE	APPR.

MARK	DESCRIPTION	DATE	APPR.

U.S. ARMY CORPS OF ENGINEERS
ST. LOUIS DISTRICT
ST. LOUIS, MO 63103

DESIGNED BY: N/A		DATE: AUGUST 2013
DWN BY: N/A	CKD BY: JAM	SOLICITATION NO.: W912P9-13-R-0722
SUBMITTED BY: GARY J. LEE, P.E.		CONTRACT NO.: CONTRACT NO.
PLOT SCALE: 1:1	PLOT DATE: No	FILE NUMBER: MOCH12
SIZE: ANSI D	FILE NAME: MOCH12_R-004.dgn	

MONARCH-CHESTERFIELD LEVEE DISTRICT
PUMP STATION NO. 7 LEVEE RAISE
MISSOURI RIVER
ST. LOUIS COUNTY, MISSOURI
RESOURCE
REFERENCE DRAWING

SHEET IDENTIFICATION
R-004

August 21, 2012 2:25 PM
J:\2005\050119 Monarch Chesterfield Levee Trail\0002C\Civil\Sheets\192_C3-0x.dwg

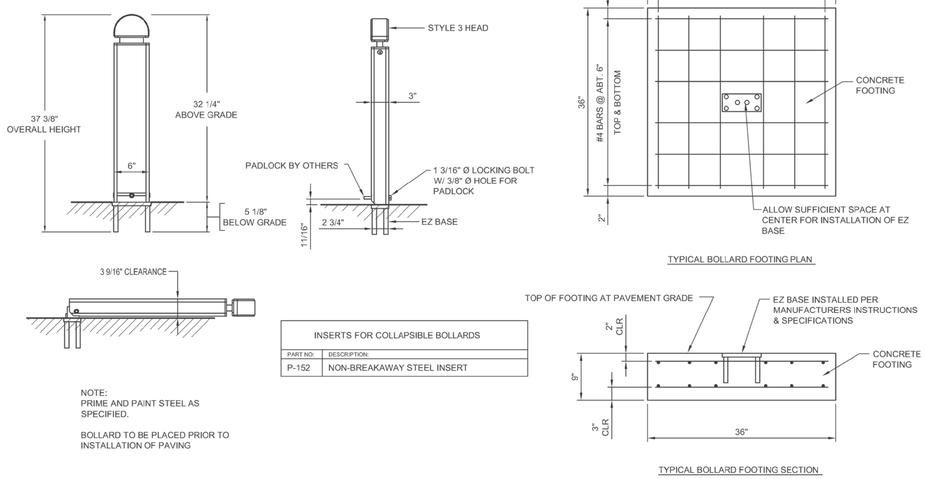

INSERTS FOR COLLAPSIBLE BOLLARDS	
PART NO:	DESCRIPTION:
P-152	NON-BREAKAWAY STEEL INSERT

NOTE:
PRIME AND PAINT STEEL AS SPECIFIED.

BOLLARD TO BE PLACED PRIOR TO INSTALLATION OF PAVING

5 BOLLARD DETAIL (MAXIFORCE OR APPROVED EQUAL)
SCALE: N.T.S.

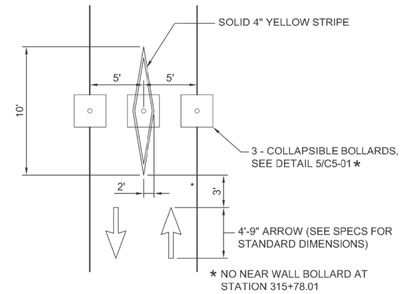

3 TYPICAL BOLLARD POST STRIPING
SCALE: N.T.S.

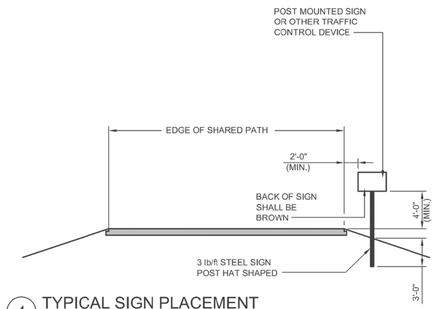

4 TYPICAL SIGN PLACEMENT
SCALE: N.T.S.

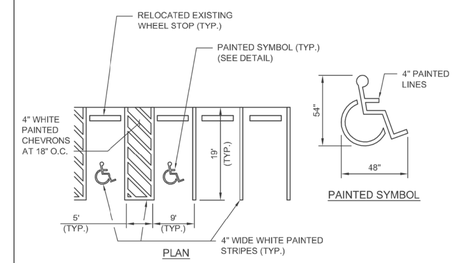

8 HANDICAP STALL LAYOUT
SCALE: N.T.S.

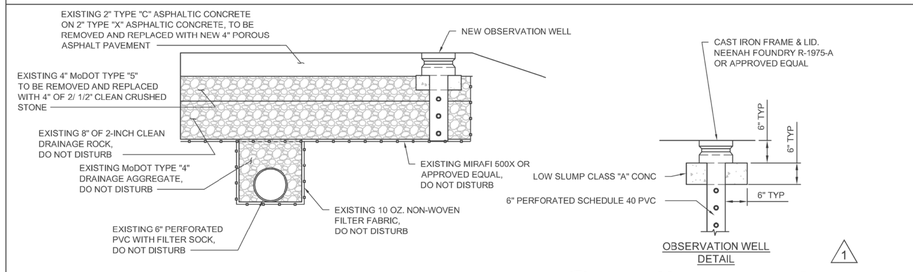

INFILTRATION TESTING SHALL BE PERFORMED ON THE EXISTING BASE ROCK LAYER AFTER THE REMOVAL OF THE TOP 4". IF THE OBSERVED INFILTRATION RATE IS <6"/HR, ADDITIONAL LAYERS OF THE EXISTING BASE ROCK SHALL BE REMOVED TO THE DEPTH (UP TO AND INCLUDING FULL DEPTH REPLACEMENT) AT WHICH A MINIMUM INFILTRATION RATE OF 6"/HR IS OBSERVED. OWNER'S ENGINEER SHALL BE ONSITE TO ENSURE TESTING IS PERFORMED PER INDUSTRY STANDARDS, AND SHALL CERTIFY THAT THE DESIRED RATE HAS BEEN ACHIEVED.

9 POROUS ASPHALT PAVEMENT
SCALE: N.T.S.

PERVIOUS ASPHALT
PAVEMENT
POWER WASHING, RESURFACING, AND
THE USE OF SAND ABRASIVES FOR
WINTER TIRE TRACKING ARE
PROHIBITED

CARE SHALL BE TAKEN DURING
SNOW PLOWING
USE RUBBER EDGED BLADE ONLY

NOTES:
STANDARD 18" x 12" x 0.080" ALUMINUM SIGN FACE WITH BLACK TEXT ON WHITE BACKGROUND, MOUNTED ON A GALVANIZED STEEL POST 9'-6" LONG.

SET BOTTOM OF SIGN 5'-0" ABOVE GRADE

SET BOTTOM OF POST 3'-0" BELOW GRADE

11 PERVIOUS WARNING SIGN
SCALE: N.T.S.

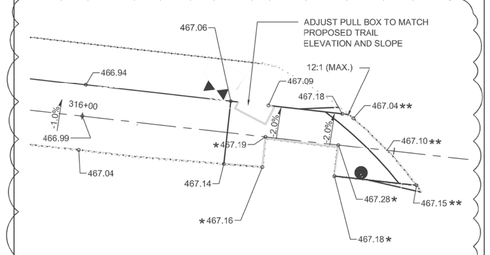

* MATCH EXISTING FLOOD WALL FOUNDATION ELEVATION
** MATCH EXISTING BOTTOM OF CURB ELEVATION

12 WARPING PLAN, SOUTHWEST CORNER OF BAXTER ROAD AND EDISON AVENUE
SCALE: 1 INCH = 10 FEET

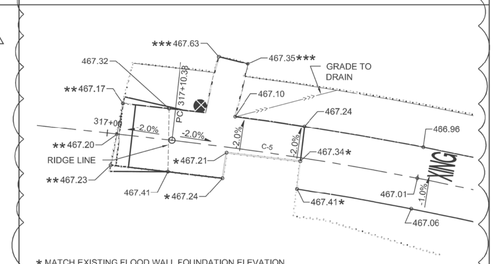

* MATCH EXISTING FLOOD WALL FOUNDATION ELEVATION
** MATCH EXISTING BOTTOM OF CURB ELEVATION
*** MATCH EXISTING SIDEWALK ELEVATION

18 WARPING PLAN, SOUTHEAST CORNER OF BAXTER ROAD AND EDISON AVENUE
SCALE: 1 INCH = 10 FEET

HT#2087 MSD P-0029491-00 BASEMAPS: 17U, 17T

MONARCH
CHESTERFIELD
LEVEE TRAIL
PHASE V

City of Chesterfield

Kuhlmann *design* Group, Inc.
66 Progress Parkway
St. Louis, Missouri 63043-3706
Tel: 314.434.8898 Fax: 314.434.8280
St. Louis, MO • Belleville, IL

KdG

DISCLAIMER OF RESPONSIBILITY
I hereby specify that the documents intended to be authenticated by my seal are limited to this sheet, and I hereby disclaim any responsibility for all other Drawings, Specifications, Estimates, Reports or other documents or instruments relating to or intended to be used for any part or parts of the architectural or engineering project or survey.

CIVIL
MISSOURI ARCHITECTURAL
CORPORATION CERTIFICATE LIC. NO.: 000216
MISSOURI PROFESSIONAL ENGINEERING
CORPORATION CERTIFICATE LIC. NO.: 000255
MISSOURI PROFESSIONAL LAND SURVEY
CORPORATION CERTIFICATE LIC. NO.: 000078

NO.	DATE	
1	08/21/2012	SLCo COMMENTS

PROJECT NO. 050119	CONTRACT NO. 0002
DRAWN JMU	CHECKED CDF2
DATE: JULY 18, 2012	

DETAILS

SHEET 12 OF 26

C5-01

Copyright © 2008 Kuhlmann Design Group, Inc. All Rights Reserved

US Army Corps of Engineers®

MARK	DESCRIPTION	DATE	APPR.	MARK	DESCRIPTION	DATE	APPR.

DESIGNED BY: N/A		DATE: AUGUST 2013	
DWN BY: N/A	CKD BY: JAM	SOLICITATION NO.: W912P9-13-R-0722	
SUBMITTED BY: GARY J. LEE, P.E.		CONTRACT NO.: CONTRACT NO.	
PLOT SCALE: N/A	PLOT DATE: N/A	FILE NUMBER: MOCH12	
SIZE: ANSI D	FILE NAME: MOCH12_R-005.dgn		

U.S. ARMY CORPS OF ENGINEERS
ST. LOUIS DISTRICT
ST. LOUIS, MO 63103

MONARCH-CHESTERFIELD LEVEE DISTRICT
PUMP STATION NO. 7 LEVEE RAISE
MISSOURI RIVER
ST. LOUIS COUNTY, MISSOURI
RESOURCE
REFERENCE DRAWING

SHEET IDENTIFICATION
R-005

August 21, 2012 2:42 PM
J:\050050\050119 Monarch Chesterfield Levee Trail\0000\Civil\Sheets\152_C5-00.dwg

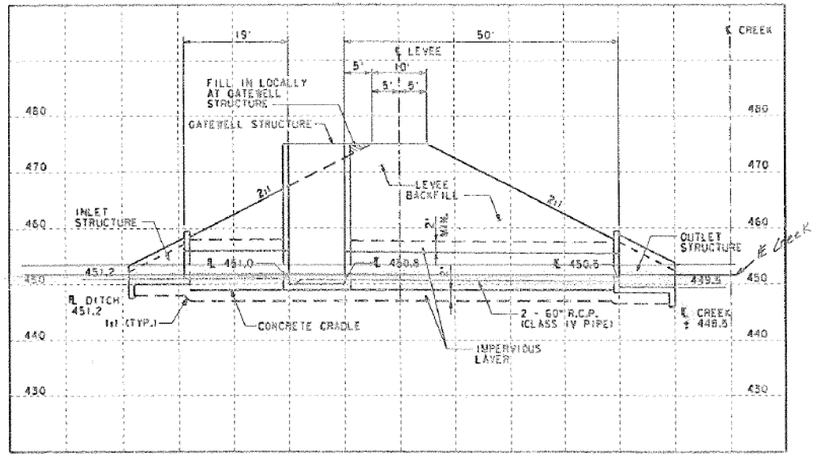

CROSS SECTION
SCALE: 1" = 10' VERT.
1" = 10' HORIZ.

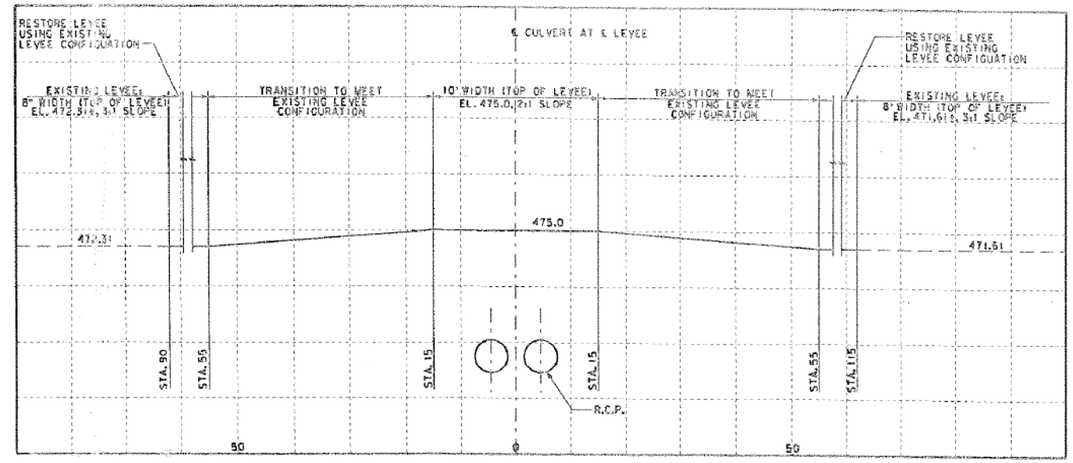

PROFILE
SCALE: 1" = 10'

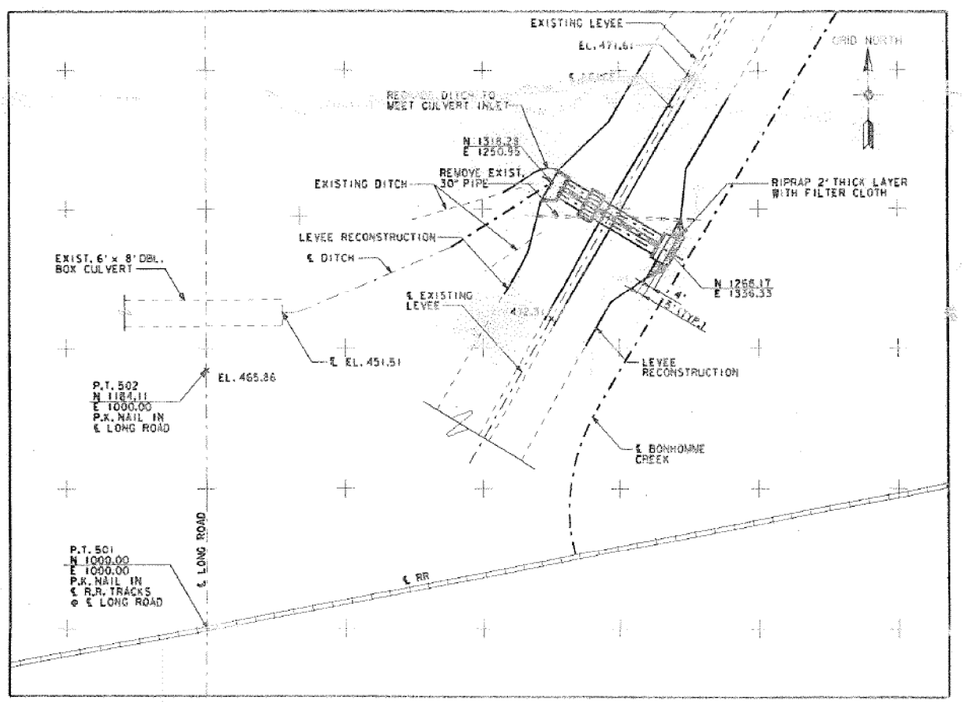

SITE PLAN
SCALE: 1" = 40'

Revisions			
Symbol	Descriptions	Date	Approved

SVERDRUP CIVIL INC.
13723 RIVERPORT DRIVE
MARYLAND HEIGHTS, MISSOURI

CITY OF CHESTERFIELD
900 ROOSEVELT PARKWAY
CHESTERFIELD, MISSOURI

Designed by: J.K.I.
Drawn by: P.D.N.
Checked by: J.S.G.
Submitted by: T.M.T.

DRAINAGE STRUCTURE NEAR LONG ROAD
SITE PLAN, CROSS SECTION, & PROFILE

Scale: AS NOTED
Sheet number: C1
Plot Scale:
Date: 05 OCTOBER 1993
Design File: CRESTO1.3D

STATE OF MISSOURI
THOMAS M. THEE
NUMBER E-21038
REGISTERED PROFESSIONAL ENGINEER

US Army Corps of Engineers®

MARK	DESCRIPTION	DATE	APPR.

MARK	DESCRIPTION	DATE	APPR.

U.S. ARMY CORPS OF ENGINEERS
ST. LOUIS DISTRICT
ST. LOUIS, MO 63103

DESIGNED BY: N/A
DWN BY: N/A
CKD BY: JAM
SUBMITTED BY: GARY J. LEE, P.E.
PLOT SCALE: 1:1
PLOT DATE:
SIZE: ANSI D
FILE NAME: MOCH12_R-006.dgn
DATE: AUGUST 2013
SOLICITATION NO.: W912P8-13-R-0722
CONTRACT NO.: CONTRACT NO.
FILE NUMBER: MOCH12

MONARCH-CHESTERFIELD LEVEE DISTRICT
PUMP STATION NO. 7 LEVEE RAISE
MISSOURI RIVER
ST. LOUIS COUNTY, MISSOURI
RESOURCE
REFERENCE DRAWING

SHEET IDENTIFICATION
R-006

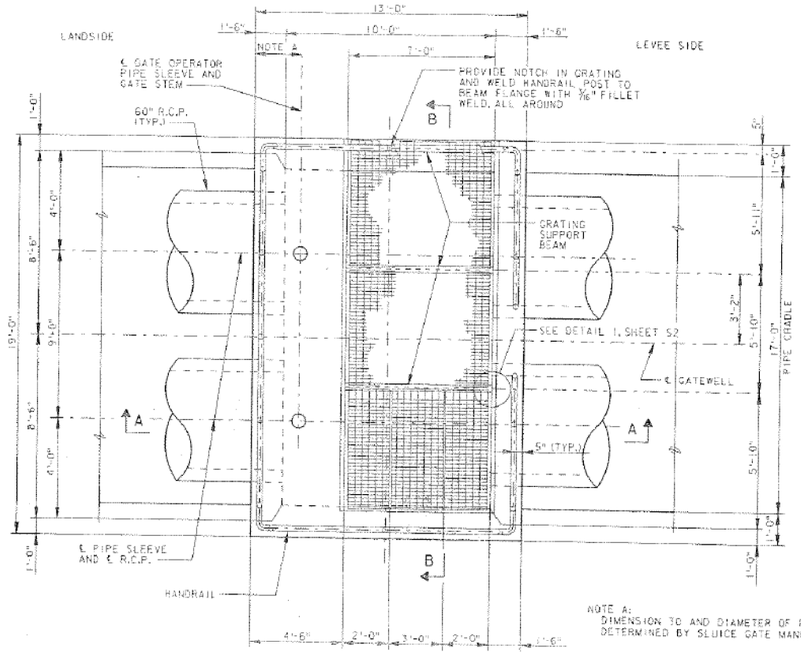

PLAN

NOTE A:
DIMENSION TO AND DIAMETER OF PIPE SLEEVE TO BE DETERMINED BY SLUICE GATE MANUFACTURER'S REQUIREMENTS.

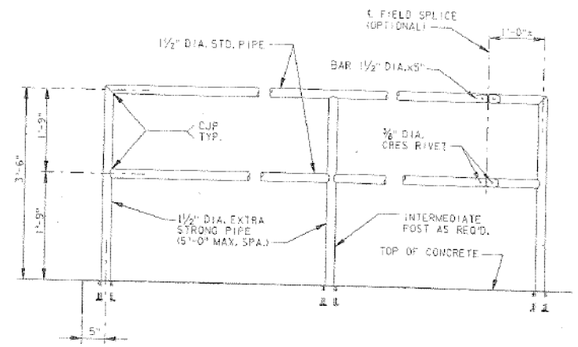

HANDRAIL DETAILS

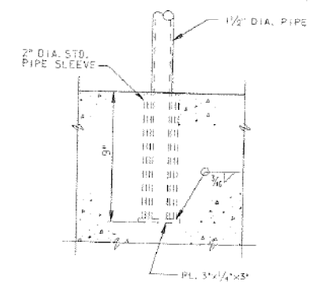

POST ANCHOR DETAIL

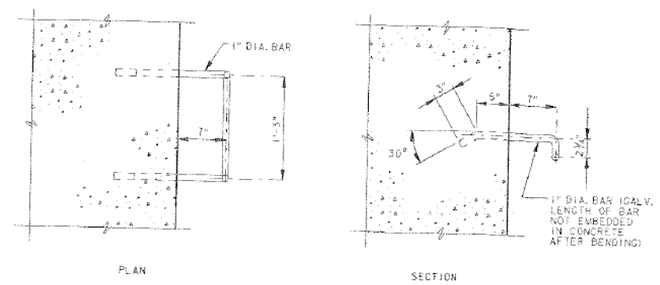

LADDER RUNG DETAILS

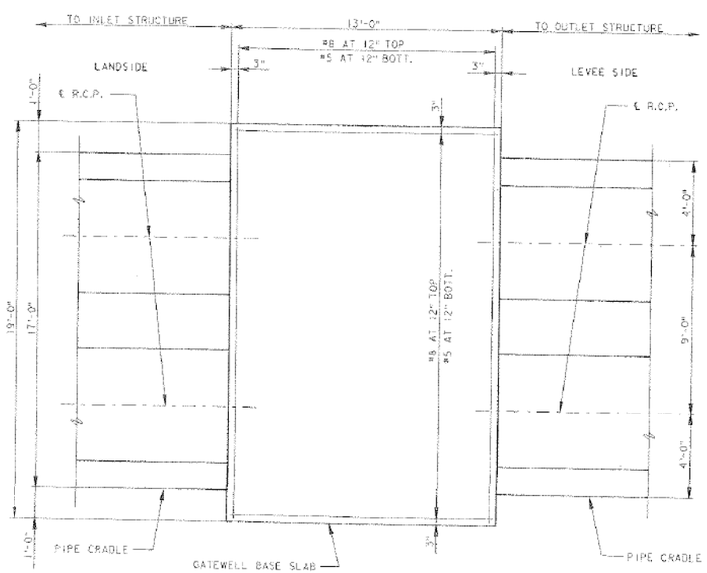

BASE SLAB PLAN

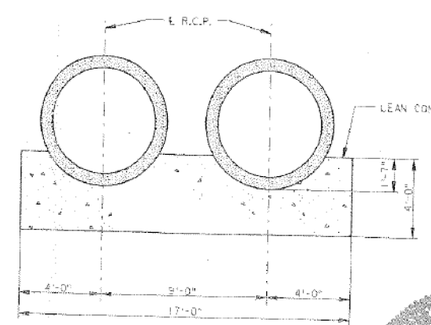

TYPICAL SECTION THRU PIPE CRADLE

NOTES:
1. ANCHORAGE OF FLOORSTAND AND PLACEMENT OF INTERMEDIATE STEM GUIDES SHALL BE IN ACCORDANCE WITH THE MANUFACTURER'S RECOMMENDATIONS.
2. PROVIDE NEOPRENE GASKET AROUND R.C.P. AT WALL INTERFACE.
3. CLEAR COVER TO REINFORCING STEEL SHALL BE 3" FOR CONCRETE FACE PLACED AGAINST EARTH AND 2" IN ALL OTHER LOCATIONS.

NOTE: DO NOT SCALE THIS DRAWING. FOLLOW DIMENSIONS.

Revisions			
Symbol	Descriptions	Date	Approved

SVERDRUP CIVIL INC.
13723 RIVERPORT DRIVE
MARYLAND HEIGHTS, MISSOURI

CITY OF CHESTERFIELD
900 ROOSEVELT PARKWAY
CHESTERFIELD, MISSOURI

Designed by: RAW	DRAINAGE STRUCTURE NEAR LONG ROAD
Drawn by: SCS	GATEWELL PLAN AND DETAILS
Checked by: RAW	Scales / Sheet Numbers: S1 / Plot Scales
Submitted by: TMT	Date: 05 OCTOBER 1993 / Design File: CFLDGWD1.DGN

US Army Corps of Engineers®

MARK	DESCRIPTION	DATE	APPR.

MARK	DESCRIPTION	DATE	APPR.

U.S. ARMY CORPS OF ENGINEERS
ST. LOUIS DISTRICT
ST. LOUIS, MO 63103

DESIGNED BY: N/A		DATE: AUGUST 2013	
DWN BY: N/A	CKD BY: JAM	SOLICITATION NO.: W912P8-13-R-0722	
SUBMITTED BY: GARY J. LEE, P.E.		CONTRACT NO.: CONTRACT NO.	
PLOT SCALE: N/A	PLOT DATE: N/A	FILE NUMBER: MOCH12	
SIZE: ANSI D	FILE NAME: MOCH12_R-007.dgn		

MONARCH-CHESTERFIELD LEVEE DISTRICT
PUMP STATION NO. 7 LEVEE RAISE
MISSOURI RIVER
ST. LOUIS COUNTY, MISSOURI

RESOURCE
REFERENCE DRAWING

SHEET IDENTIFICATION
R-007

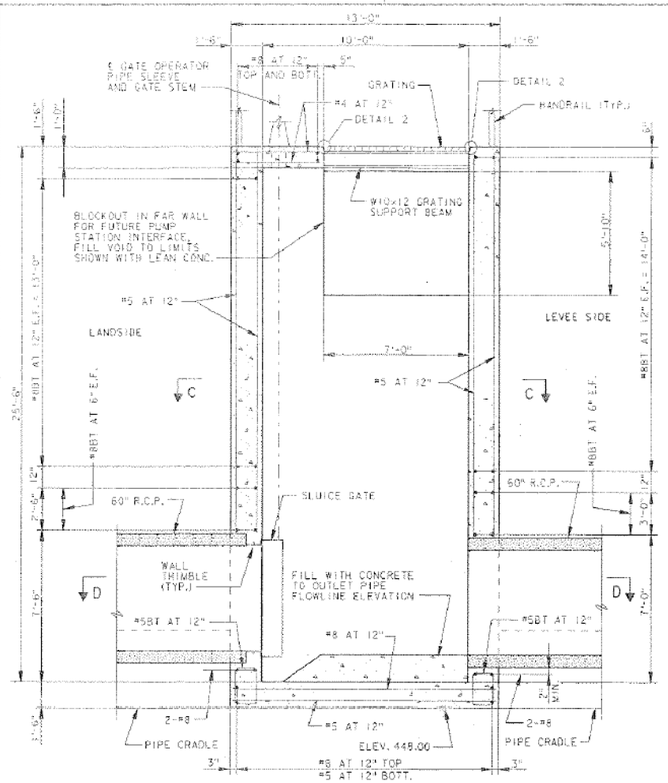

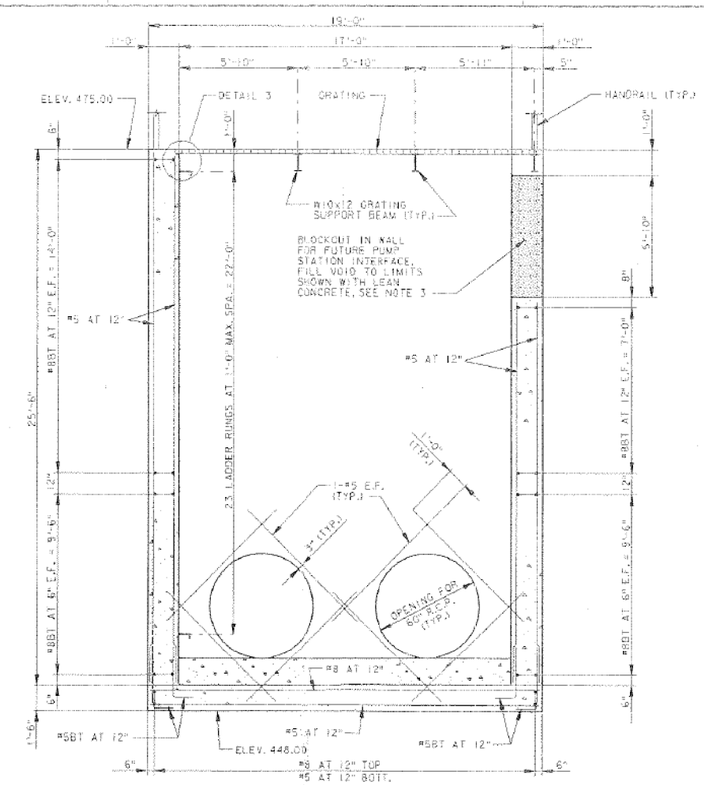

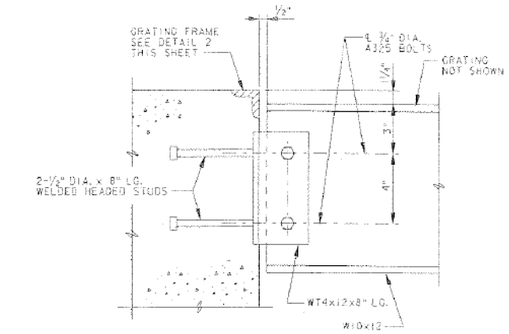

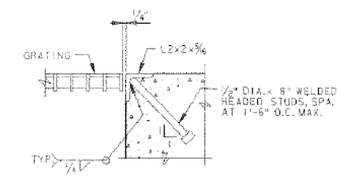

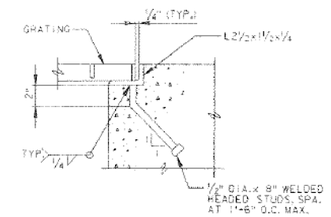

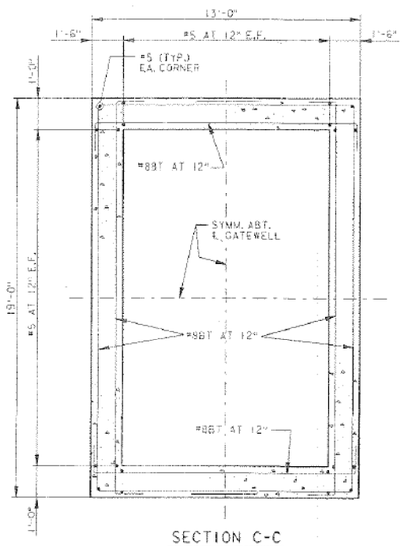

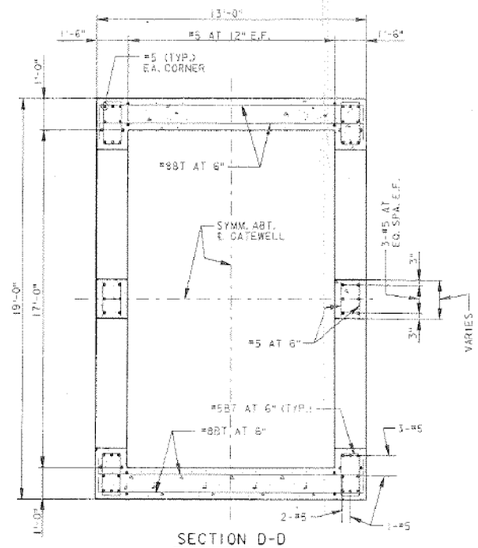

NOTES:
1. FOR OTHER NOTES, SEE SHEET S1.
2. EXTEND ADDITIONAL VERTICAL REINFORCEMENT REQUIRED 2'-0" ABOVE THE TOP OF PIPE OPENING. #5 TIES TO TERMINATE AT TOP OF PIPE OPENING.
3. LEAN CONCRETE SHALL BE PLACED 7 DAYS AFTER PLACEMENT OF GATEWELL CONCRETE.

NOTE: DO NOT SCALE THIS DRAWING. FOLLOW DIMENSIONS.

Revisions			
Symbol	Descriptions	Date	Approved

SVERDRUP CIVIL INC.
13723 RIVERPORT DRIVE
MARYLAND HEIGHTS, MISSOURI

CITY OF CHESTERFIELD
900 ROOSEVELT PARKWAY
CHESTERFIELD, MISSOURI

Designed by: RAW
Drawn by: SCS
Checked by: RAW
Submitted by: TMT

DRAINAGE STRUCTURE NEAR LONG ROAD

GATEWELL
SECTIONS AND DETAILS

Scales
Sheet Numbers: S2
Plot Scales
Date: 05 OCTOBER 1993
Design File: CFLOGW02.DGN

US Army Corps of Engineers®

MARK	DESCRIPTION	DATE	APPR.

MARK	DESCRIPTION	DATE	APPR.

U.S. ARMY CORPS OF ENGINEERS
ST. LOUIS DISTRICT
ST. LOUIS, MO 63103

DESIGNED BY: N/A
DWN BY: N/A
CKD BY: JAM
SUBMITTED BY: GARY J. LEE, P.E.
DATE: AUGUST 2013
SOLICITATION NO.: W912P9-13-R-0722
CONTRACT NO.:
CONTRACT NO.:
PLOT SCALE: No Scale
PLOT DATE:
FILE NUMBER: MOCH72
SIZE: ANSI D
FILE NAME: MOCH72_R-008.dgn

MONARCH-CHESTERFIELD LEVEE DISTRICT
PUMP STATION NO. 7 LEVEE RAISE
MISSOURI RIVER
ST. LOUIS COUNTY, MISSOURI

RESOURCE
REFERENCE DRAWING

SHEET IDENTIFICATION
R-008

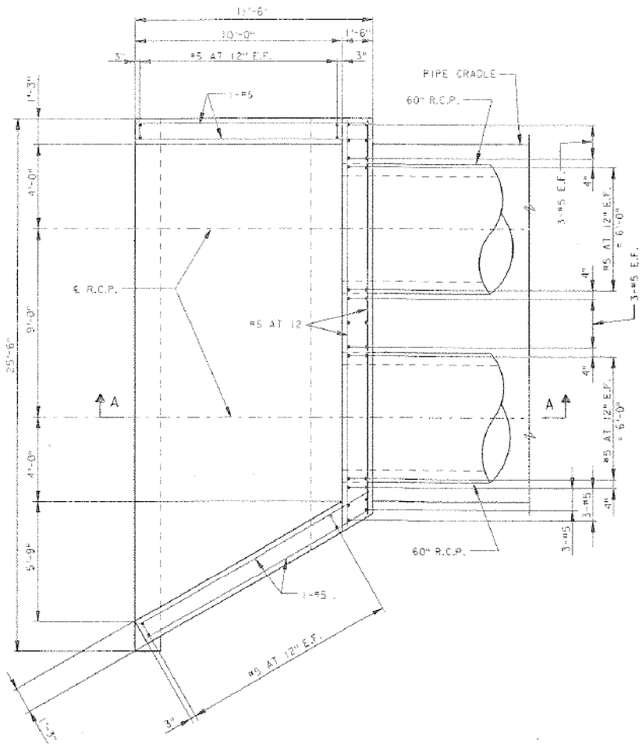

PLAN - INLET STRUCTURE

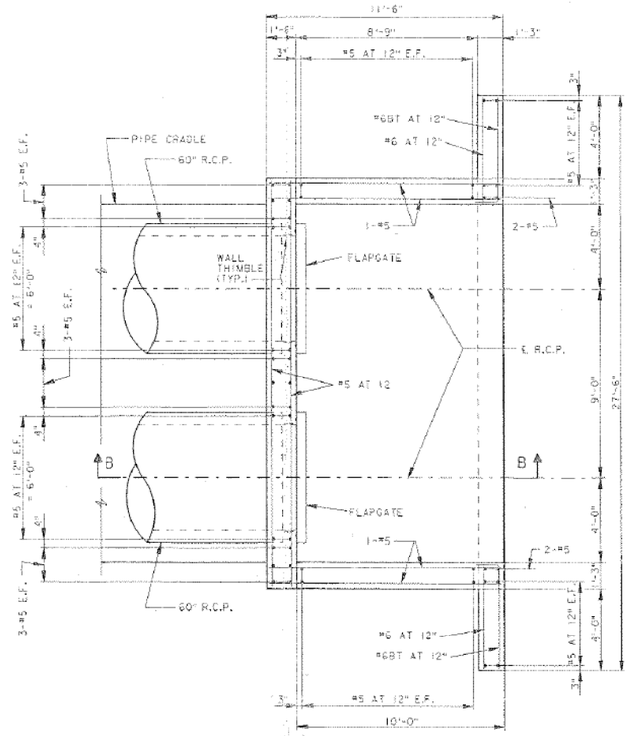

PLAN - OUTLET STRUCTURE

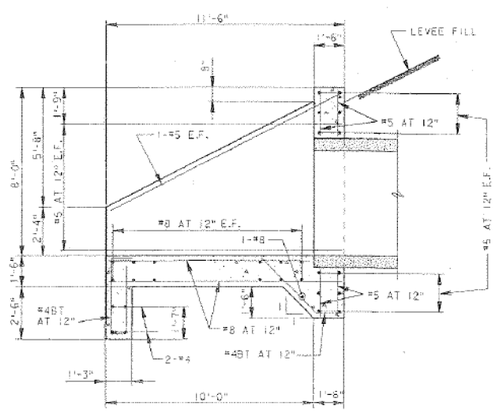

SECTION A-A

NOTE:
PIPE CRADLE NOT SHOWN.

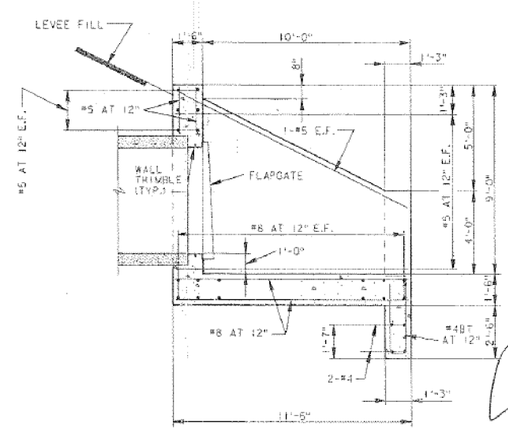

SECTION B-B

NOTE:
PIPE CRADLE NOT SHOWN.

NOTES:
1. CLEAR COVER TO REINFORCING STEEL SHALL BE 3" FOR CONCRETE FACE PLACED AGAINST EARTH AND 2" IN ALL OTHER LOCATIONS.

THOMAS M. TRUE NUMBER E-21038 STATE OF MISSOURI REGISTERED PROFESSIONAL ENGINEER

Revisions		
Symbol	Descriptions	Date Approved

SVERDRUP CIVIL INC.
13723 RIVERPORT DRIVE
MARYLAND HEIGHTS, MISSOURI

CITY OF CHESTERFIELD
900 ROOSEVELT PARKWAY
CHESTERFIELD, MISSOURI

Designed by: RAW
Drawn by: SCS
Checked by: RAW
Submitted by: TMT

DRAINAGE STRUCTURE NEAR LONG ROAD

INLET/OUTLET STRUCTURES
PLANS AND SECTIONS

Scale:
Sheet Number: S3
Plot Scale:
Date: 05 OCTOBER 1993
Design File: CFLDGN03.DGN

NOTE: DO NOT SCALE THIS DRAWING. FOLLOW DIMENSIONS.

US Army Corps of Engineers®

MARK	DESCRIPTION	DATE	APPR.

MARK	DESCRIPTION	DATE	APPR.

U.S. ARMY CORPS OF ENGINEERS
ST. LOUIS DISTRICT
ST. LOUIS, MO 63103

DESIGNED BY: N/A
DWN BY: N/A
CKD BY: JAM
SUBMITTED BY: GARY J. LEE, P.E.
PLOT SCALE: N/A
PLOT DATE:
SIZE: ANSI D
FILE NAME: MOCH12_R-009.dgn
DATE: AUGUST 2013
SOLICITATION NO.: W912P8-13-R-0722
CONTRACT NO.: CONTRACT NO.
FILE NUMBER: MOCH12

MONARCH-CHESTERFIELD LEVEE DISTRICT
PUMP STATION NO. 7 LEVEE RAISE
MISSOURI RIVER
ST. LOUIS COUNTY, MISSOURI
RESOURCE
REFERENCE DRAWING

SHEET IDENTIFICATION
R-009

INDEX OF SHEETS

SHEET V-001	COVER SHEET
SHEETS V-101 TO V-102	TOPOGRAPHIC SURVEY

SURVEY NOTES

1. TOPOGRAPHIC AND PLANIMETRIC SURVEYS WERE COMPLETED BY BOWEN ENGINEERING AND SURVEYING, P.C. DURING THE MONTH OF JUNE 2013 IN ACCORDANCE WITH QUALITY MANAGEMENT PLAN AND QUALITY CONTROL PROCEDURES.

2. HORIZONTAL PROJECT DATUM - NAD 1983
   COORDINATE SYSTEM - US STATE PLANE 1983
   ZONE - MISSOURI EAST (2401)
   VERTICAL PROJECT DATUM - NAVD 1988

3. THE HORIZONTAL AND VERTICAL DATUMS WERE ESTABLISHED BY TYING TO EXISTING BENCHMARKS PROVIDED BY THE CORPS OF ENGINEERS. BENCHMARKS ARE SHOWN ON THE SURVEY.

4. DATE(S) SURVEY WORK COMPLETED:
   06/19/2013

5. SEE DGN FILES FOR SPOT ELEVATIONS.

CONTROL POINTS FROM TASK ORDER NO. 35, CONTRACT NO. W912-P9-04-D-0504

POINT	NORTHING	EASTING	ELEV.	DESCRIPTION	2013 RECOVERY NOTES
TP1	1028869.7124	786545.8062	471.423	CORPS MONUMENT CP501	*NOT RECOVERED*
TP2	1029778.3140	786512.7421	464.574	TEMPORARY PK NAIL	*HELD FOR CURRENT SURVEY*
TP3	1028623.8309	786557.4252	480.929	TEMPORARY 60D NAIL	*NOT RECOVERED*
TP4	1028985.3973	786597.5967	468.147	1/2 " IRON PIN	*NOT RECOVERED*
TP5	1029171.6625	786222.4533	473.099	1/2 " IRON PIN	*NOT RECOVERED*
TP6	1028783.7279	786468.3640	473.436	TEMPORARY 60D NAIL	*NOT RECOVERED*
TP7	1028705.3113	786418.0207	474.188	TEMPORARY 60D NAIL	*NOT RECOVERED*
TP8	1028627.8524	786368.9696	473.283	TEMPORARY 60D NAIL	*NOT RECOVERED*
TP9	1029480.2770	786745.8405	472.683	1/2 " IRON PIN	*DISTURBED*
TP10	1029699.0742	786765.2136	460.017	CORPS MONUMENT P203	*HELD FOR CURRENT SURVEY*
TP11	1029274.7296	786425.7274	473.796	TEMPORARY 60D NAIL	*DESTROYED*
TP12	1028867.6290	786862.6920	459.852	TEMPORARY 60D NAIL	*NOT RECOVERED*
TP13	1029164.2258	786916.0951	466.377	TEMPORARY 60D NAIL	*DESTROYED*
TP14	1029336.9447	786925.0033	462.090	TEMPORARY 60D NAIL	*NOT RECOVERED*
TP15	1028513.5099	786357.4902	466.859	TEMPORARY 60D NAIL	*NOT RECOVERED*

CONTROL POINTS FROM TASK ORDER NO. 22, CONTRACT W912P9-11-D-0502

POINT	NORTHING	EASTING	ELEV.	DESCRIPTION	2013 RECOVERY NOTES
TP16	1029735.8330	786889.8176	478.243	1/2" REBAR	*HELD FOR CURRENT SURVEY*
TP17	1029435.6477	786699.1193	475.684	1/2" REBAR	*NOT RECOVERED*

NEW CONTROL POINTS

POINT	NORTHING	EASTING	ELEV.	DESCRIPTION
TP18	1030052.8247	787044.3041	478.705	SET TEMPORARY PK NAIL
TP19	1030250.0025	787176.1260	478.707	SET TEMPORARY PK NAIL

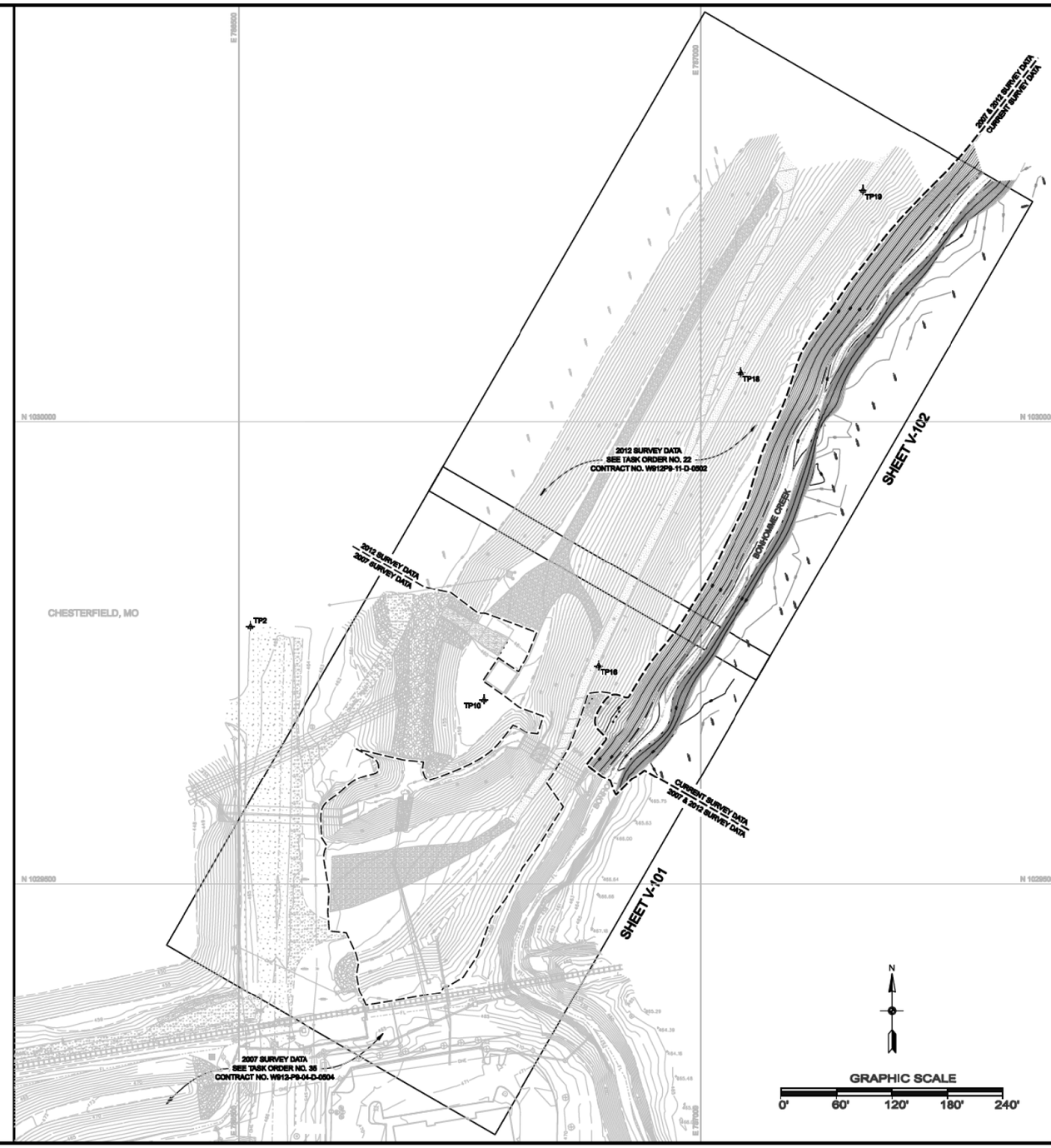

US Army Corps of Engineers®

MARK	DESCRIPTION	DATE	APPR.	MARK	DESCRIPTION	DATE	APPR.

U.S. ARMY CORPS OF ENGINEERS
ST. LOUIS DISTRICT
ST. LOUIS, MISSOURI

BOWEN ENGINEERING & SURVEYING, P.C.
2121 MEGAN DRIVE
CAPE GIRARDEAU, MO 63701

SURVEYED BY: N/A
DWN BY: N/A
CKD BY: JAM
SUBMITTED BY: GARY J. LEE P.E.
PLOT SCALE: 1:1
PLOT DATE: N/A
SIZE: ANSI D
FILE NAME: WOCH12_R-010.dgn
DATE: AUGUST 2013
SOLICITATION NO.: W912P9-13-R-0722
CONTRACT NO.: W912P9-11-D-0502
FILE NUMBER: WOCH12

PUMP STATION NO. 7 LEVEE RAISE, PHASE 2
TOPOGRAPHIC & PLANIMETRIC SURVEYS
CHESTERFIELD, MO

COVER SHEET

Sheet ID
V-001

US Army Corps of Engineers®

MARK	DESCRIPTION	DATE	APPR.	MARK	DESCRIPTION	DATE	APPR.

U.S. ARMY CORPS OF ENGINEERS
ST. LOUIS DISTRICT
ST. LOUIS, MO 63103

DESIGNED BY: N/A
DWN BY: N/A
CKD BY: JAM
SUBMITTED BY: GARY J. LEE P.E.
PLOT SCALE: 1:1
PLOT DATE: N/A
SIZE: ANSI D
FILE NAME: WOCH12_R-010.dgn
DATE: AUGUST 2013
SOLICITATION NO.: W912P9-13-R-0722
CONTRACT NO.: W912P9-11-D-0502
FILE NUMBER: WOCH12

MONARCH-CHESTERFIELD LEVEE DISTRICT
PUMP STATION NO. 7 LEVEE RAISE
MISSOURI RIVER
ST. LOUIS COUNTY, MISSOURI

RESOURCE
REFERENCE DRAWING

SHEET IDENTIFICATION
R-010