US Army Corps
of Engineers®

MONARCH-CHESTERFIELD LEVEE DISTRICT

RELIEF WELLS
MISSOURI RIVER
ST. LOUIS COUNTY, MISSOURI

Solicitation: W912P9-13-R-0720

Contract: W912P9-XX-X-XXXX

JULY 2013

US Army Corps
of Engineers®

MARK	DESCRIPTION	DATE	APPR.	MARK	DESCRIPTION	DATE	APPR.

U.S. ARMY CORPS OF ENGINEERS
ST. LOUIS DISTRICT
ST. LOUIS, MO 63103

DESIGNED BY: JAMES A. MILLS, P.E.
DATE: JULY 2013
DWN BY: LHW
CKD BY: BJD
SOLICITATION NO.: W912P9-13-R-0720
SUBMITTED BY: BRANDON B. LEWIS, P.E.
CONTRACT NO.: CONTRACT NO.
PLOT SCALE: 1:1
PLOT DATE: N/A
FILE NUMBER: MOCH13
SIZE: ANSI D
FILE NAME: MOCH13_G-001.dgn

MONARCH-CHESTERFIELD LEVEE DISTRICT
RELIEF WELLS
MISSOURI RIVER
ST. LOUIS COUNTY, MISSOURI

COVER SHEET

SHEET IDENTIFICATION
G-001

INDEX OF DRAWINGS

SHT	TITLE	SHT	TITLE	SHT	TITLE	SHT	TITLE
	GENERAL						
G-001	COVER SHEET						
G-002	INDEX OF DRAWINGS						
G-003	PROJECT LOCATION AND VICINITY MAPS						
G-004	GENERAL NOTES & LEGEND						
	GEOTECHNICAL						
B-001	SOIL AND ROCK LEGEND						
B-201	BORING LOGS						
B-202	BORING LOGS						
B-301	TYPE "T" RELIEF WELL						
B-302	TYPE "T" RELIEF WELL OUTLET SYSTEM - MANHOLE DETAILS						
B-501	MANHOLE SCHEDULE AND RELIEF WELL MANHOLE DETAILS						
B-502	SEEPAGE COLLECTOR SYSTEM - MANHOLE DETAILS						
B-503	SEEPAGE COLLECTOR SYSTEM - COLLECTOR PIPE DETAILS						
	CIVIL						
C-101	GENERAL SITE PLAN AND ALIGNMENTS						
C-102	CONSTRUCTION LIMITS PLAN						
C-103	FINISH GRADING PLAN - DISCHARGE PIPE						
C-201	DISCHARGE PIPE PROFILE						
C-202	COLLECTOR PIPE PROFILE						
C-401	EXCAVATION PLAN						
C-402	EXCAVATION PLAN						
C-403	EXCAVATION PLAN						
C-404	EXCAVATION PLAN						
C-501	DISCHARGE OUTFALL DETAILS						
C-502	MANHOLE EXCAVATION DETAILS						
C-503	DETAILS - MANHOLES AND PIPES - EXCAVATION AND BACKFILL						
C-504	DETAILS - RIPRAP INSTALLATION - AND PIPE ABANDONMENT						
	REFERENCE						
R-701	ST. CHARLES GAGE HYDROGRAPH 1987 - 2001						
R-702	ST. CHARLES GAGE HYDROGRAPH 2002 - PRESENT						

US Army Corps of Engineers®

MARK	DESCRIPTION	DATE	APPR.

MARK	DESCRIPTION	DATE	APPR.

U.S. ARMY CORPS OF ENGINEERS
ST. LOUIS DISTRICT
ST. LOUIS, MO 63103

DESIGNED BY: JAMES A. MILLS, P.E.
DWN BY: LHW
CKD BY: BJD
SUBMITTED BY: BRANDON B. LEWIS, P.E.
PLOT SCALE: 1:1
PLOT DATE: N/A
SIZE: ANSI D
FILE NAME: MDCH13_G-002.dgn
DATE: JULY 2013
SOLICITATION NO.: W912P8-13-R-0720
CONTRACT NO.: CONTRACT NO.
FILE NUMBER: MDC-013

MONARCH-CHESTERFIELD LEVEE DISTRICT
RELIEF WELLS
MISSOURI RIVER
ST. LOUIS COUNTY, MISSOURI

INDEX OF DRAWINGS

SHEET IDENTIFICATION
G-002

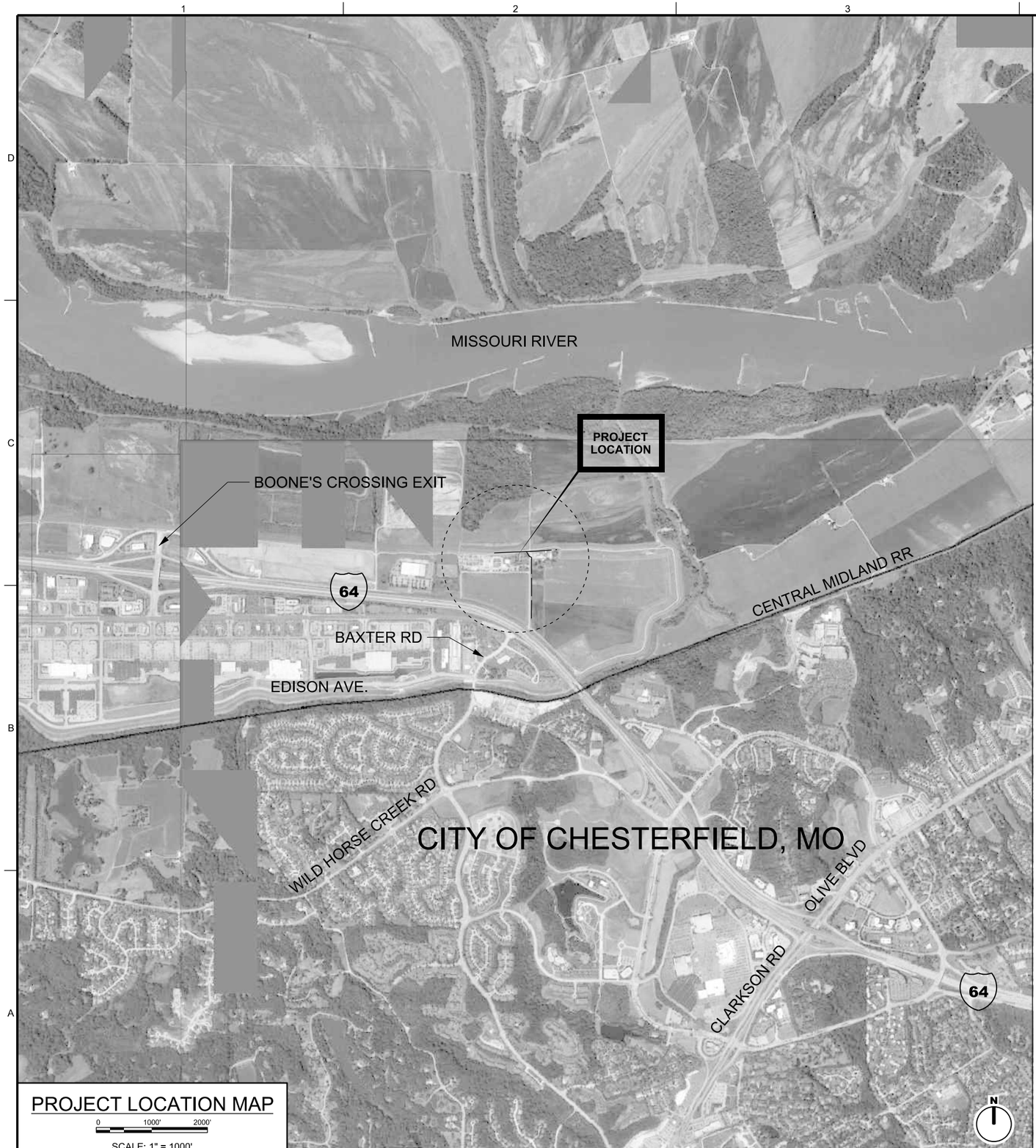

PROJECT LOCATION MAP

0 1000' 2000'

SCALE: 1" = 1000'

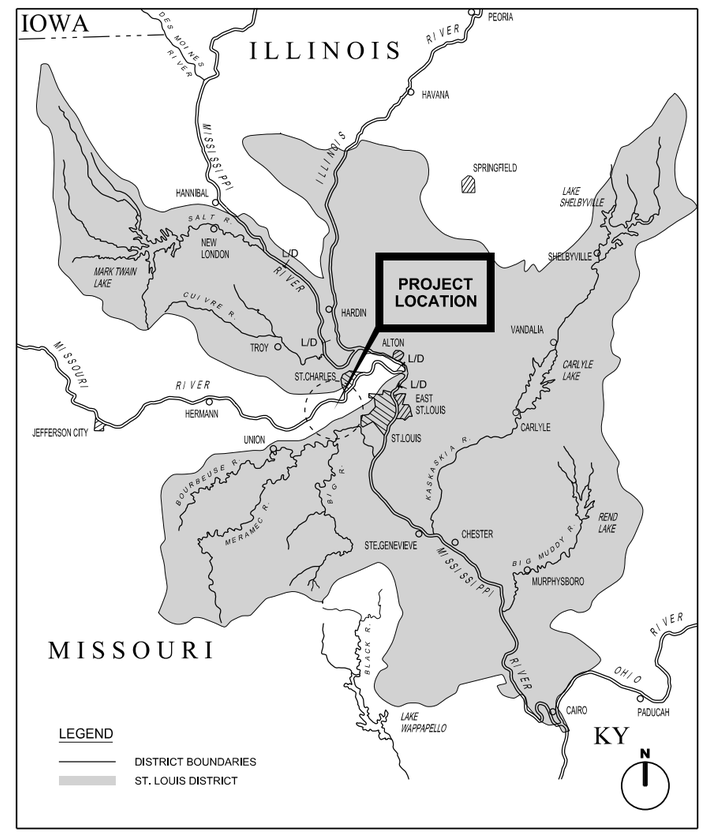

VICINITY MAP

APPROX. SCALE IN MILES

35 0 35 70

GENERAL SHEET NOTES:

1. PROJECT IS LOCATED IN THE CITY OF CHESTERFIELD, MO.
2. FOR GENERAL NOTES, SEE SHEET G-004.
3. FOR SURVEY NOTES AND SURVEY CONTROL POINTS INFORMATION, SEE SHEET G-004.

US Army Corps of Engineers®

MARK	DESCRIPTION	DATE	APPR.

MARK	DESCRIPTION	DATE	APPR.

U.S. ARMY CORPS OF ENGINEERS
ST. LOUIS DISTRICT
ST. LOUIS, MO 63103

DESIGNED BY: JAMES A. MILLS, P.E.
DWN BY: LHW
CKD BY: BJD
SUBMITTED BY: BRANDON B. LEWIS, P.E.
PLOT SCALE: 1:1
PLOT DATE: N/A
SIZE: ANSI D
FILE NAME: MDCH13_G-003.dgn
DATE: JULY 2013
SOLICITATION NO.: W912P8-13-R-0720
CONTRACT NO.: CONTRACT NO.
FILE NUMBER: MDCH-13

MONARCH-CHESTERFIELD LEVEE DISTRICT
RELIEF WELLS
MISSOURI RIVER
ST. LOUIS COUNTY, MISSOURI

PROJECT LOCATION AND VICINITY MAPS

SHEET IDENTIFICATION
G-003

GENERAL CROSS-REFERENCING SYMBOLS

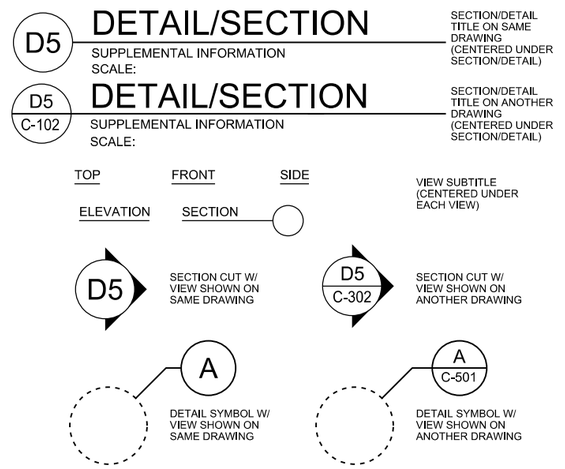

ABBREVIATIONS

* UNLESS OTHERWISE NOTED ON EACH SHEET

APPROX	APPROXIMATE	HT	HEIGHT
ALT W/	ALTERNATE WITH	IF	INSIDE FACE
ALUM	ALUMINUM	LG	LONG
BITUM	BITUMINOUS	L/W	LANDWARD
BOT	BOTTOM	MAX	MAXIMUM
C/L	CENTER LINE	MIN	MINIMUM
C&G	CURB & GUTTER	MIRR	MIRRORED
CLR	CLEAR	MISC	MISCELLANEOUS
CJ	CONSTRUCTION JOINT	NF	NEAR FACE
CMP	CORRUGATED METAL PIPE	NO	NUMBER
CONC	CONCRETE	OF	OUTSIDE FACE
		OC	ON CENTER
DIA	DIAMETER	R/W	RIVERWARD
DWG	DRAWING	SAN	SANITARY
EF	EACH FACE	SPEC	SPECIFICATIONS
EJ	EXPANSION JOINT	SST	STAINLESS STEEL
EL	ELEVATION	T&B	TOP AND BOTTOM
EW	EACH WAY	TYP	TYPICAL
EXIST	EXISTING	UNO	UNLESS NOTED OTHERWISE
FF	FAR FACE	UGND	UNDERGROUND
FES	FLARED END SECTION	W	WIDTH
GALV	GALVANIZED	WM	WATER MAIN

GENERAL LEGEND

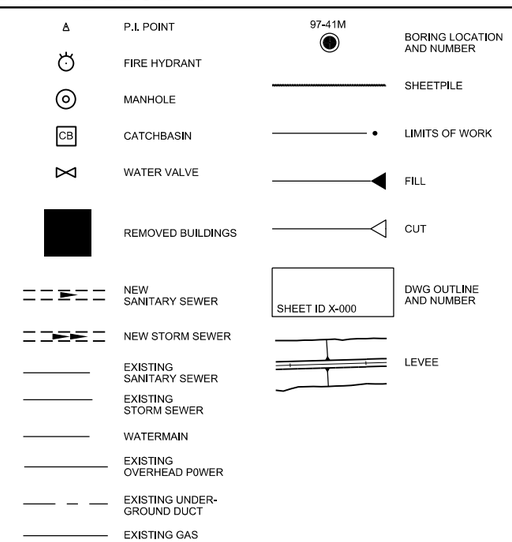

GENERAL NOTES

GENERAL NOTES.

1. FOR PROJECT LOCATION AND LOCATIONS OF EXISTING FACILITIES, SEE LOCATION AND VICINITY MAPS.

2. RELOCATION OF THE EXISTING UTILITIES, IF REQUIRED, IS THE RESPONSIBILITY OF THE CONTRACTOR AND THE UTILITY OWNER. CONTRACTOR SHALL IMMEDIATELY COORDINATE WITH THE CONTRACTING OFFICER IF ANY EXISTING UTILITIES ARE ENCOUNTERED DURING CONSTRUCTION WHICH MAY CAUSE POTENTIAL OR ACTUAL INTERFERENCE OR CONFLICT OF SUCH UTILITIES WITH CONSTRUCTION OF THE NEW WORK.

3. EXISTING UTILITY LOCATIONS SHOWN ARE BASED ON BEST AVAILABLE INFORMATION AND MAY NOT EXACTLY REFLECT FIELD CONDITIONS. THE CONTRACTOR IS RESPONSIBLE FOR FIELD VERIFYING ALL UTILITY LOCATIONS. IT SHALL BE THE RESPONSIBILITY OF THE CONTRACTOR TO VERIFY ALL UNDERGROUND UTILITIES AND THE LOCATION THEREOF PRIOR TO BEGINNING CONSTRUCTION.

4. THE CONTRACTOR SHALL NOT DISTURB OR BLOCK ACCESS TO OTHER FACILITIES, RESIDENCES BUSINESSES AND WORK AREAS THAT MAY BE ADJACENT TO THE SITE. DETOURS, WHEN REQUIRED, SHALL BE COORDINATED WITH THE CONTRACTING OFFICER.

5. CONTRACTOR SHALL PROTECT ALL OTHER APPURTENANCES DURING CONSTRUCTION. ITEMS DAMAGED DURING CONSTRUCTION SHALL BE REPLACED AT NO ADDITIONAL COST TO THE GOVERNMENT. ANY DAMAGE TO THE EXISTING GROUNDS OR FACILITIES CAUSED BY CONSTRUCTION TRAFFIC OR ANY CONSTRUCTION OPERATIONS, SHALL BE REPAIRED OR REPLACED BY THE CONTRACTOR TO MEET OR EXCEED EXISTING CONDITIONS AT NO ADDITIONAL COST TO THE GOVERNMENT.

6. STOCKPILE AND STAGING AREAS UTILIZED BY THE CONTRACTOR SHALL BE RESTORED TO THE PRECONSTRUCTION CONDITION, GRADED SMOOTH AND SEEDED.

7. BRAND NAMES: REFERENCE TO SPECIFIC BRAND NAMES OR COMPANIES IS FOR THE PURPOSE OF ESTABLISHING MINIMUM QUALITY STANDARDS, IDENTIFICATION AND GUIDANCE AND IS NOT INTENDED TO LIMIT SELECTION OF OTHER MANUFACTURERS THAT ARE EQUAL OR EXCEED THE SPECIFIED ITEMS IN TERMS OF PHYSICAL PROPERTIES, INCLUDING, COLOR RANGE, FINISH, DURABILITY, APPEARANCE, PERFORMANCE CHARACTERISTICS AND OTHER FACTORS, OTHER PRODUCTS, MATERIALS, COLORS AND SYSTEMS, MAY BE SUBMITTED FOR EVALUATION AND APPROVAL/DISAPPROVAL BY THE CONTRACTING OFFICER.

8. THIS SET OF CONSTRUCTION DOCUMENTS SHALL BE CONSIDERED AS A WHOLE IN THAT THE GENERAL CONTRACTOR AND ALL THE SUB-CONTRACTORS ARE RESPONSIBLE FOR THE INFORMATION PRESENTED ON ALL SHEETS ON THE SET OF DRAWINGS AND ALL SECTIONS OF THE SPECIFICATIONS.

9. THE CONTRACTOR IS RESPONSIBLE FOR ERECTING ALL CONSTRUCTION FENCING AND BARRICADES AS REQUIRED TO PROTECT CONSTRUCTION MATERIAL AND TO PREVENT ANY UNAUTHORIZED PERSONNEL FROM ENTERING THE CONSTRUCTION SITE.

10. ALL WORK NOTED AND LOCATED IN THESE DOCUMENTS SHALL BE UNDERSTOOD BY THE CONTRACTOR TO REQUIRE ALL NEW LABOR AND MATERIALS UNLESS SPECIFICALLY NOTED TO BE "EXISTING" , "BY OTHERS" OR "GOVERNMENT-FURNISHED".

SURVEY NOTES

SURVEY NOTES:

1. TOPOGRAPHIC SURVEY PERFORMED DURING THE MONTH OF NOVEMBER 2012, BY HANSON PROFESSIONAL SERVICES INC. IN ACCORDANCE WITH OURQUALITY MANAGEMENT PLAN AND QUALITY CONTROL PROCEDURES.

2. HORIZONTAL DATUM IS BASED ON THE NORTH AMERICAN DATUM OF 1983(NAD83) 2007. COORDINATES SHOWN ARE MISSOURI EAST ZONE STATEPLANE AND ARE EXPRESSED IN US SURVEY FEET.

3. VERTICAL DATUM IS BASED ON THE NATIONAL GEODETIC VERTICAL DATUMOF 1929 (NGVD29).

4. UTILITIES SHOWN ON TOPOGRAHIC SURVEY WERE LOCATED BY ABOVE GROUND INDICATIONS.UNDERGROUND UTILITIES WERE FLAGGED IN FIELD BY CALLING MISSOURI ONE CALL.

5. SEE SURVEY CONTROL POINTS TABLE BELOW FOR LOCATION OF SURVEY CONTROL POINTS.

SURVEY CONTROL POINTS

SURVEY CONTROL POINTS

POINT	NORTHING (Y)	EASTING (X)	ELEV. (Z)	DESCRIPTION
CPO1	1031168.57	799331.43	472.44	5/8" REBAR
CP02	1032656.10	798483.00	458.74	5/8" REBAR
CP03	1032609.01	801172.48	472.27	5/8" REBAR
BM02	1031121.60	799282.60	484.48	SQ ON TOP OF BRIDGE WALL
PBM12-24	1030940.70	797420.90	462.12	MSD BENCHMARK

LEGEND:

CP = CONTROL POINT
BM = BENCHMARK
PBM = PERMANENT BENCHMARK

US Army Corps of Engineers®

MARK	DESCRIPTION	DATE	APPR.	MARK	DESCRIPTION	DATE	APPR.

U.S. ARMY CORPS OF ENGINEERS
ST. LOUIS DISTRICT
ST. LOUIS, MO 63103

DESIGNED BY: JAMES A. MILLS, P.E.
DWN BY: LHW
CKD BY: BJD
SUBMITTED BY: BRANDON B. LEWIS, P.E.
PLOT SCALE: 1:1
PLOT DATE: N/A
SIZE: ANSI D
FILE NAME: MOCH13_G-004.dgn
DATE: JULY 2013
SOLICITATION NO.: W912P8-13-R-0720
CONTRACT NO.: CONTRACT NO.
FILE NUMBER: MOCH13

MONARCH-CHESTERFIELD LEVEE DISTRICT
RELIEF WELLS
MISSOURI RIVER
ST. LOUIS COUNTY, MISSOURI

GENERAL NOTES & LEGEND

SHEET IDENTIFICATION
G-004

UNIFIED SOIL CLASSIFICATION ASTM D 2487

MAJOR DIVISION		TYPE	LETTER SYMBOL	SYMBOL	TYPICAL NAMES
COARSE-GRAINED SOILS (More than half of material is larger than No. 200 sieve size)	GRAVELS (More than half of coarse fraction is larger than No. 4 sieve size)	CLEAN GRAVEL (Little or No fines)	GW		GRAVEL, Well Graded, gravel-sand mixtures, little or no fines
			GP		GRAVEL, Poorly Graded, gravel-sand mixtures, little or no fines
		GRAVEL WITH FINES (Appreciable Amount of Fines)	GM		SILTY GRAVEL, gravel-sand-silt mixtures
			GC		CLAYEY GRAVEL, gravel-sand-clay mixtures
	SANDS (More than half of coarse fraction is smaller than No. 4 sieve size)	CLEAN SAND (Little or No fines)	SW		SAND, Well-Graded, gravelly sands
			SP		SAND, Poorly-graded, gravelly sands
		SAND WITH FINES (Appreciable Amount of Fines)	SM		SILTY SAND, sand-silt mixtures
			SC		CLAYEY SAND, sand-clay mixtures
FINE-GRAINED SOILS (More than half the material is smaller than No. 200 sieve size)		SILT AND CLAYS (Liquid Limit < 50)	ML		SILT & very fine sand, silty or clayey fine sand or clayey silt with slight plasticity
			CL		LEAN CLAY; Sandy Clay; Silty Clay; of low to medium plasticity
			OL		ORGANIC SILTS and organic silty clays of low plasticity
		SILT AND CLAYS (Liquid Limit > 50)	MH		SILT, fine sandy or silty soil with high plasticity
			CH		FAT CLAY, inorganic clay of high plasticity
			OH		ORGANIC CLAYS of medium to high plasticity, organic silts
HIGHLY ORGANIC SOILS			Pt		PEAT, and other highly organic soil
WOOD			Wd		WOOD
SHELLS			Sl		SHELLS

NOTE: Soil possessing characteristics of two groups are designated by combinations of group symbols

CLASSIFICATION AND DESCRIPTION OF ROCK

GROUP	LETTER SYMBOL	SYMBOL	ROCK CLASSIFICATION
SEDIMENTARY ROCKS	CON		CONGLOMERATE
	SAN		SANDSTONE
	GRA		GRAYWACKE
	CLA		CLAYSTONE OR SILTSTONE
	SHA		COMPACTION SHALE
	CEM		CEMENTED SHALE
	COA		COAL
	LIM		LIMESTONE
	DOL		DOLOMITE
	CHA		CHALK (OR MARL)
	CT		CHERT
	CA		CAVITY
	GRN		GRANITE

PLASTICITY CHART

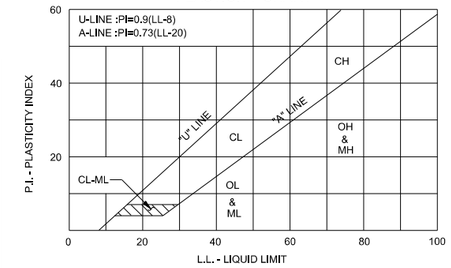

For classification of fine-grained soils
Reference: ASTM D 2487, Figure 3

BORING SUFFIX

LETTER SYMBOL	DESCRIPTION
A	Angle Core Boring
B	Bag Samples-Soil-Borings
C	Core Boring
O	Observation Boring
P	Piezometer
U	Undistrubed Sample-Soil-Boring

FIGURES TO LEFT OF BORING UNDER COLUMN "W OR D_{10}"

Are natural water content in percent dry weight (FW denotes Free Water) ASTM D 2216

When underlined denotes D_{10} size in mm - ASTM C 136 *

FIGURES TO LEFT OF BORING UNDER COLUMNS "LL" AND "PL"

Are liquid and plastic limits, respectively - ASTM D 4318

SYMBOLS TO LEFT OF BORING

▽ Groundwater surface and date observed

Ⓒ Denotes location of consolidation test **

Ⓢ Denotes location of consolidation-drained direct shear test **

Ⓡ Denotes location of consolidation-undrained triaxial compression test **

Ⓠ Denotes location of unconsolidation-undrained triaxial compression test **

Ⓣ Denotes location of sample subjected to consolidation test and each of the above three types of shear tests **

5-50 Pressure Test Results Shown as 5 gals/min at 50 psi

○— Denotes proposed channel grade

* The D_{10} size of a soil is the grain diameter in millimeters of which 10% of the soil is finer, and 90% coarser than size D_{10}- ASTM C 136.

** Results of these tests are available for inspection in the U.S. Army Engineer District Office, if these symbols appear beside the boring logs on the drawings.

FIGURES TO RIGHT OF BORING

Are values of cohesion in lbs./sq. ft. from unconfined compression tests

In parenthesis and not underlined are driving resistance in blows per foot determined with a standard split spoon sampler (1⅜" I.D., 2 " O.D.) and a 140 lb. driving hammer with a 30 " drop - ASTM D 1586. In parenthesis and underlined are for a 2 ½" I.D., 3 " O.D. split spoon sampler and 350 lb. driving hammer with an 18 " drop.

Where underlined with a solid line denotes laboratory permeability in centimeters per second of undisturbed sample.

Where underlined with a dashed line denotes laboratory permeability in centimeters per second of sample remolded to the estimated natural void ratio.

SYMBOLS TO RIGHT OF BORING

Ⓐ Denotes classification determined by process of drilling, no representative sample obtained.

DESCRIPTIVE SYMBOLS

MODIFICATIONS

MODIFICATION	SYMBOL
Traces	Tr-
Fine	F
Very Fine	vF
Medium	M
Coarse	C
Calc. Concretions	cc
Rootlets	rt
Lignite fragments	lg
Shale fragments	shs
Sandstone fragments	sds
Shell fragments	slf
Organic matter	O
Clay strata or lenses	CS
Silt strata or lenses	SIS
Sand strata or lenses	SS
Sandy	S
Gravelly	G
Boulders	B
Slickensides	SL
Wood	Wd
Oxidized	Ox
Decomposed Limonite Concretions	DLC
Began use of drilling mud	B.D.M. →
Began use of casing	B.Ca. →
Beginning of Specified Core Size	NX Core →
Ground Surface Elev.	G.S.E.
Water Surface Elev.	W.S.E.

COLORS

COLOR	SYMBOL
TAN	T
YELLOW	Y
RED	R
BLACK	BK
GRAY	Gr
LIGHT GRAY	lGr
DARK GRAY	dGr
BROWN	Br
LIGHT BROWN	lBr
DARK BROWN	dBr
BROWNISH-GRAY	BRG
GRAYISH-BROWN	GYB
GREENISH-GRAY	GNG
GRAYISH-GREEN	Gyg
GREEN	Gn
BLUE	Bl
BLUE-GREEN	BLG
WHITE	Wh
MOTTLED	Mot
REDDISH	RD

CONSISTENCY FOR COHESIVE SOILS

CONSISTENCY	COHESION IN LBS./SQ.FT. FROM UNCONFINED COMPRESSION TEST	SYMBOL
VERY SOFT	< 250	vSo
SOFT	250-500	So
MEDIUM	500-1000	M
STIFF	1000-2000	St
VERY STIFF	2000-4000	vSt
HARD	> 4000	H

GENERAL NOTES :

WHILE THE BORINGS ARE REPRESENTATIVE OF SUBSURFACE CONDITIONS AT THEIR RESPECTIVE LOCATIONS AND FORTHEIR RESPECTIVE VERTICAL REACHES, LOCAL VARIATIONS CHARACTERISTIC OF THE SUBSURFACE MATERIALS OF THE REGION ARE ANTICIPATED AND, IF ENCOUNTERED, SUCH VARIATIONS WILL NOT BE CONSIDERED AS DIFFERING MATERIALLY WITHIN THE PURVIEW OF THE CONTRACT CLAUSE ENTITLED "DIFFERING SITE CONDITIONS."

GROUNDWATER ELEVATIONS SHOWN ON THE BORING LOGS REPRESENT GROUNDWATER SURFACE ENCOUNTERED IN SUCH BORINGS ON THE DATE SHOWN. ABSENCE OF WATER SURFACE DATA ON CERTAIN BORINGS INDICATES THAT NO GROUNDWATER DATA ARE AVAILABLE FROM THE BORING BUT DOES NOT NECESSARILY MEAN THAT GROUNDWATER WILL NOT BE ENCOUNTERED AT THE LOCATIONS OR WITHIN THE VERTICAL REACHES OF SUCH BORINGS. GROUNDWATER ELEVATION CAN VARY FROM THAT SHOWN ON THE LOGS WITH SEASONAL WEATHER CHANGES AND DEPENDING ON THE LENGTH OF TIME THE BORE HOLE IS LEFT OPEN.

CONSISTENCY OF COHESIVE SOIL SHOWN ON THE BORING LOGS IS BASED ON DRILLER'S LOG AND VISUAL EXAMINATION AND IS APPROXIMATE, EXCEPT WITHIN THOSE VERTICAL REACHES OF THE BORING WHERE SHEAR STRENGTHS FROM UNCONFINED COMPRESSION TESTS ARE SHOWN.

APPLICABLE PUBLICATIONS

AMERICAN SOCIETY FOR TESTING AND MATERIALS (ASTM) STANDARDS
ASTM C 136 METHOD FOR SIEVE ANALYSIS OF FINE AND COARSE AGGREGATES.
ASTM D 1586 METHOD FOR PENETRATION TEST AND SPLIT-BARREL SAMPLING OF SOILS.
ASTM D 2166 TEST METHODS FOR UNCONFINED COMPRESSIVE STRENGTH OF COHESIVE SOIL.
ASTM D 2216 METHOD FOR LABORATORY DETERMINATION OF WATER (MOISTURE) CONTENT OF SOIL, ROCK, AND SOIL-AGGREGATE MIXTURES.
ASTM D 2487 CLASSIFICATION OF SOILS FOR ENGINEERING PURPOSES.
ASTM D 2488 DESCRIPTION AND INDENTIFICATION OF SOILS (VISUAL-MANUAL PROCEDURE).
ASTM D 4318 TEST METHOD FOR LIQUID LIMIT, PLASTIC LIMIT, AND PLASTICITY INDEX OF SOILS.

U.S. ARMY ENGINEER MANUAL (EM)

EM 1110-2-1906
ENGINEERING AND DESIGN, LABORATORY
SOILS TESTING, 30 NOVEMBER 1970
REVISED 20 AUGUST 1986

DRILLING AND SAMPLING EQUIPMENT

AUG-AUGER
BKH-BACKHOE
CPT-CONE PENETROMETER
HDA-HAND AUGER
HSA-HOLLOW STEM AUGER
HSP-HAND SAMPLE PROBE
RB- ROLLER BIT
SSS-STANDARD SPLIT SPOON
VST-VACCUM SHELBY TUBE (5")
WB- WING BIT

US Army Corps of Engineers®

MARK	DESCRIPTION	DATE	APPR.	MARK	DESCRIPTION	DATE	APPR.

U.S. ARMY CORPS OF ENGINEERS
ST. LOUIS DISTRICT
ST. LOUIS, MO 63103

DESIGNED BY: C.WHEELER | DATE: JULY 2013
DWN BY: TJD | CKD BY: RPG | SOLICITATION NO.: W912P8-13-R-0720
SUBMITTED BY: PATRICK J CONROY, P.E. | CONTRACT NO.: | CONTRACT NO.:
PLOT SCALE: N/A | PLOT DATE: | FILE NUMBER: MOCH13
SIZE: ANSI D | FILE NAME: MOCH13_B-001.dgn

MONARCH-CHESTERFIELD LEVEE DISTRICT
RELIEF WELLS
MISSOURI RIVER
ST. LOUIS COUNTY, MISSOURI

SOIL AND ROCK LEGEND

SHEET IDENTIFICATION
B-001

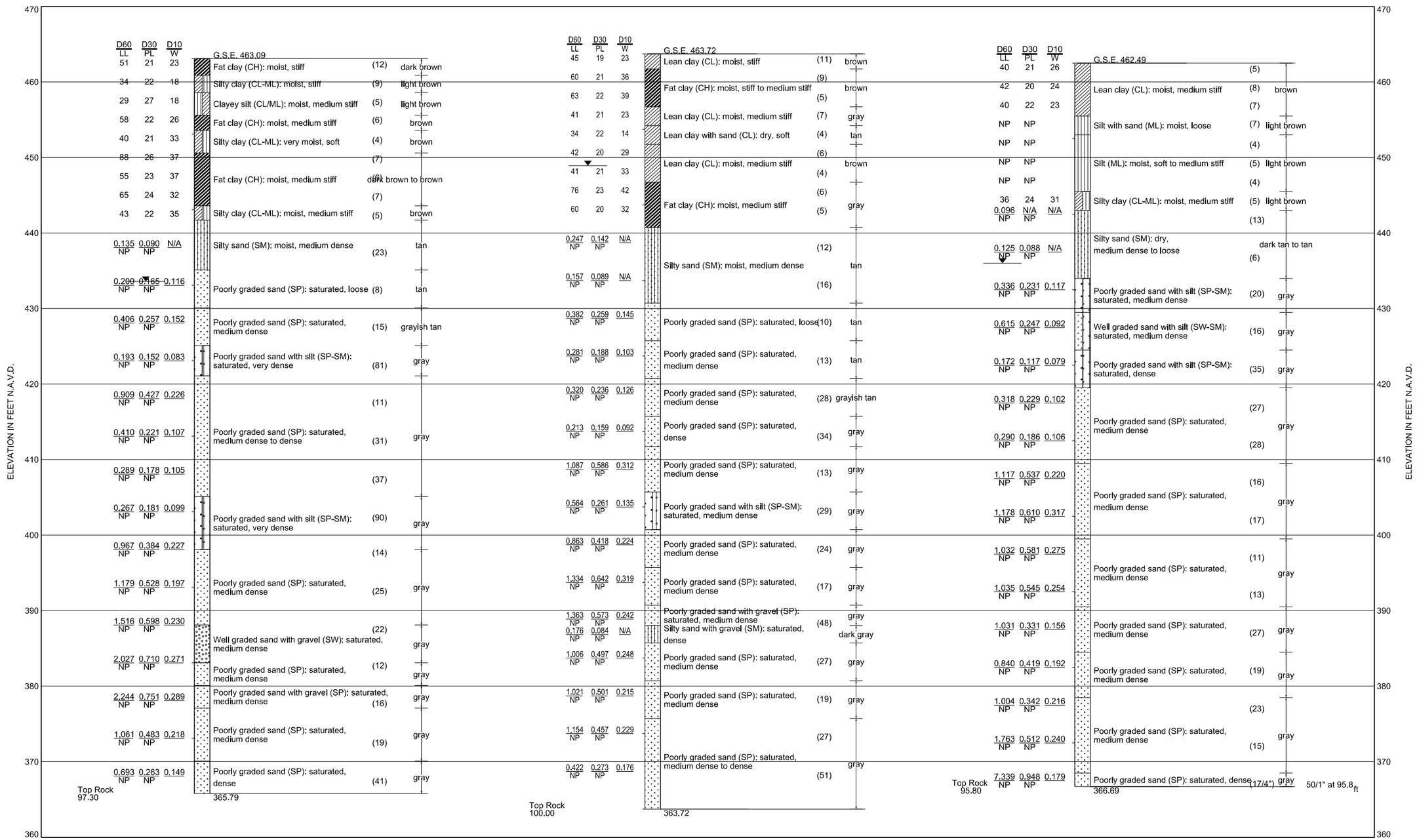

US Army Corps of Engineers®

MARK	DESCRIPTION	DATE	APPR.	MARK	DESCRIPTION	DATE	APPR.

U.S. ARMY CORPS OF ENGINEERS
ST. LOUIS DISTRICT
ST. LOUIS, MO 63103

DESIGNED BY: C.WHEELER
DWN BY: T.JD
CKD BY: RPG
SUBMITTED BY: PATRICK J COARDY, P.E.
PLOT SCALE: 1:1
PLOT DATE:
DATE: JULY 2013
SOLICITATION NO.: W912P8-13-B-0720
CONTRACT NO.: CONTRACT NO.
FILE NUMBER: MO3-013
SIZE: ANSI D
FILE NAME: MOCH13_B-201.dgn

MONARCH-CHESTERFIELD LEVEE DISTRICT
RELIEF WELLS
MISSOURI RIVER
ST. LOUIS COUNTY, MISSOURI

BORING LOGS

SHEET IDENTIFICATION
B-201

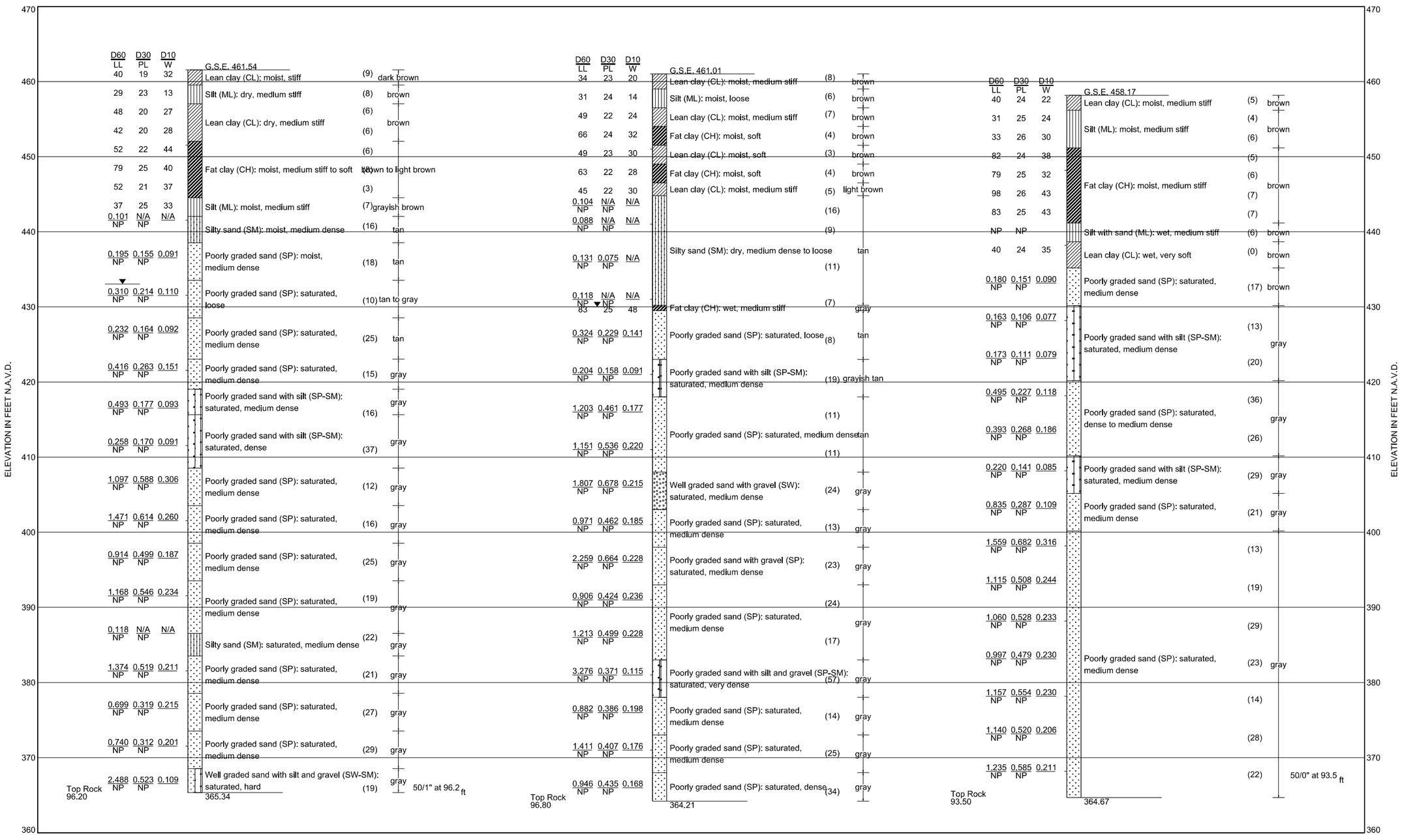

US Army Corps of Engineers®

MARK	DESCRIPTION	DATE	APPR.	MARK	DESCRIPTION	DATE	APPR.

U.S. ARMY CORPS OF ENGINEERS
ST. LOUIS DISTRICT
ST. LOUIS, MO 63103

DESIGNED BY: C.WHEELER | DATE: JULY 2013
DWN BY: TJD | CKD BY: RFG | SOLICITATION NO.: W912P8-13-R-0720
SUBMITTED BY: PATRICK J COMKOY, P.E. | CONTRACT NO.: | CONTRACT NO.:
PLOT SCALE: 1:1 | PLOT DATE: | FILE NUMBER: MMC-013
SIZE: ANSI D | FILE NAME: MCCH13_B-202.dgn

MONARCH-CHESTERFIELD LEVEE DISTRICT
RELIEF WELLS
MISSOURI RIVER
ST. LOUIS COUNTY, MISSOURI

BORING LOGS

SHEET IDENTIFICATION
B-202

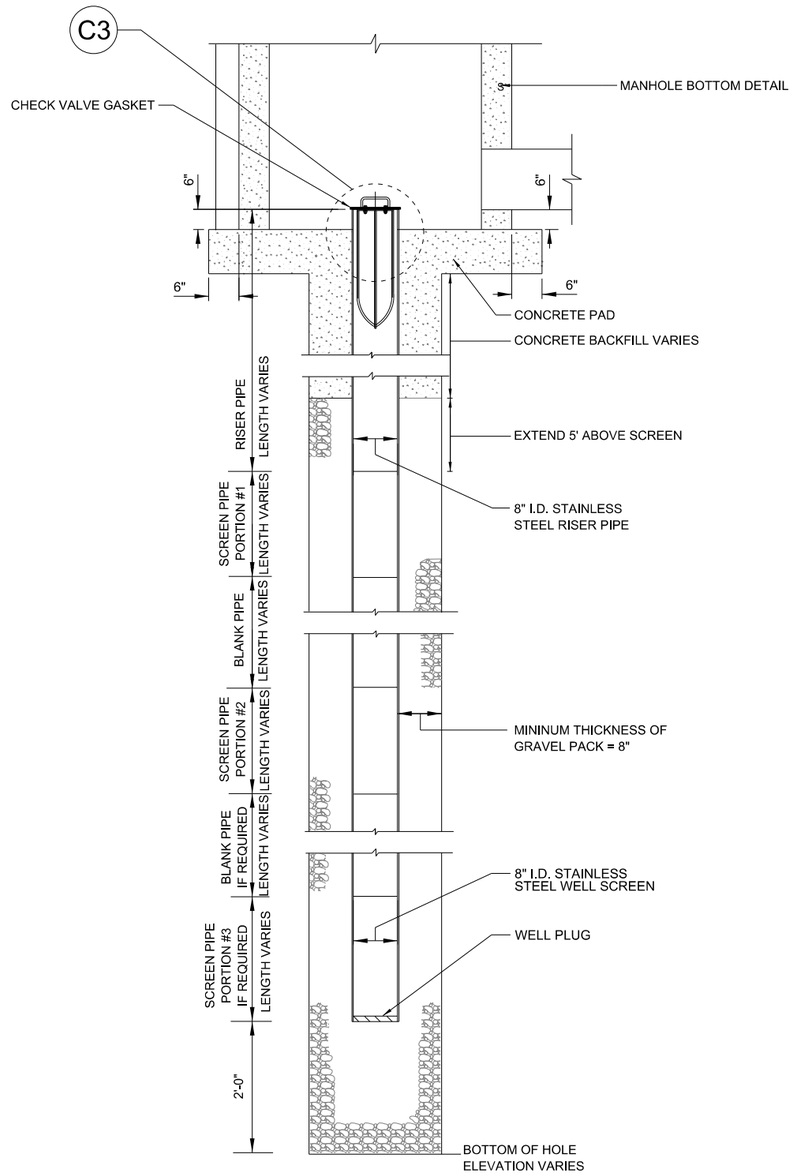

A1 TYPICAL "T" TYPE RELIEF WELL

NOT TO SCALE

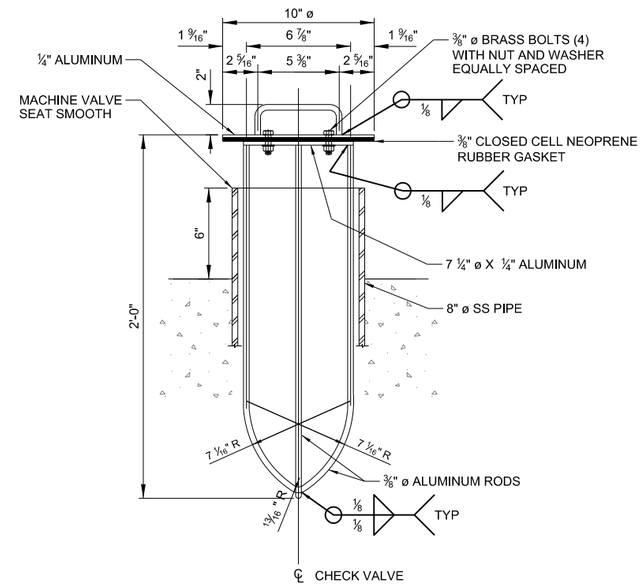

ELEVATION

C3 CHECK VALVE FOR 8" WELLS

NOT TO SCALE

RELIEF WELL	**EXISTING GROUND EL.	FLOW EL.	NORTHING*	EASTING*	DRILLING DEPTH	RISER LENGTH	BLANKS LINEAR FT.	SCREEN LENGTH LINEAR FT.	FILTER PACK SIZE	SCREEN SIZE	TOP OF RISER EL.	TOP OF SCREEN EL.	TOP OF BLANK EL.	TOP OF 2ND SCREEN EL.
MCRW-01-13	463.60	455.00	N 1033406.00	E 797849.00	82	25.5	6	41	MIP 60-80	30 SLOT	455.00	429.50	425.60	419.60
MCRW-02-13	464.25	455.00	N 1033414.00	E 798134.00	75	24.8	0	40	MIP 60-80	30 SLOT	455.00	430.20	N/A	N/A
MCRW-03-13	463.01	455.00	N 1033415.00	E 798292.00	78	26.0	5	38	MIP 60-80	30 SLOT	455.00	429.00	425.01	420.01
MCRW-04-13	461.23	455.00	N 1033414.00	E 798424.00	67	19.0	0	40	MIP 60-80	30 SLOT	455.00	436.00	N/A	N/A
MCRW-05-13	461.34	455.00	N 1033426.00	E 798587.00	79	26.5	5	40	MIP COARSE 80	30 SLOT	455.00	428.50	423.34	418.34
MCRW-06-13	458.60	455.00	N 1033452.00	E 798966.00	70	35.3	5	25	MIP #2	60 SLOT	455.00	419.70	410.60	405.60

GENERAL SHEET NOTES:

1. CONTRACTOR SHALL FIELD VERIFY ALL ELEVATIONS AND DEPTHS.

US Army Corps of Engineers®

MARK	DESCRIPTION	DATE	APPR.	MARK	DESCRIPTION	DATE	APPR.

U.S. ARMY CORPS OF ENGINEERS
ST. LOUIS DISTRICT
ST. LOUIS, MO 63103

DESIGNED BY: C.VWHEELER | DATE: JULY 2013
DWN BY: TJD | CKD BY: RPG | SOLICITATION NO.: W912P8-13-R-0720
SUBMITTED BY: PATRICK J CONROY, P.E. | CONTRACT NO.: CONTRACT NO.:
PLOT SCALE: | PLOT DATE: | FILE NUMBER: MC2013
SIZE: ANSI D | FILE NAME: MDCH13_B-301.dgn

MONARCH-CHESTERFIELD LEVEE DISTRICT
RELIEF WELLS
MISSOURI RIVER
ST. LOUIS COUNTY, MISSOURI

TYPE "T" RELIEF WELL

SHEET IDENTIFICATION
B-301

GENERAL SHEET NOTES:

1. PRECAST CONCRETE PRODUCTS SHALL BE DESIGNED BY THE MANUFACTURER TO WITHSTAND AN AASHTO H20 LOADING.
2. MANHOLE FRAME AND LID SHALL BE DESIGNED BY THE MANUFACTURER TO WITHSTAND AN AASHTO H20 LOADING.
3. METAL FRAME AND LID SHALL BE GREY IRON (ASTM A-48).
4. FOR MANHOLE SURVEY MARKER LABELING, SEE SPECS.

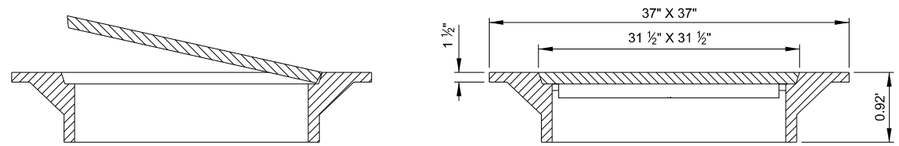

D3 GRAY IRON FRAME WITH HINGED LID DETAIL
NOT TO SCALE

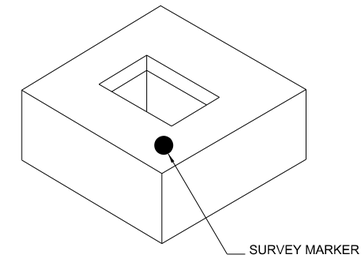

D5 RELIEF WELL MANHOLE COVER
NOT TO SCALE

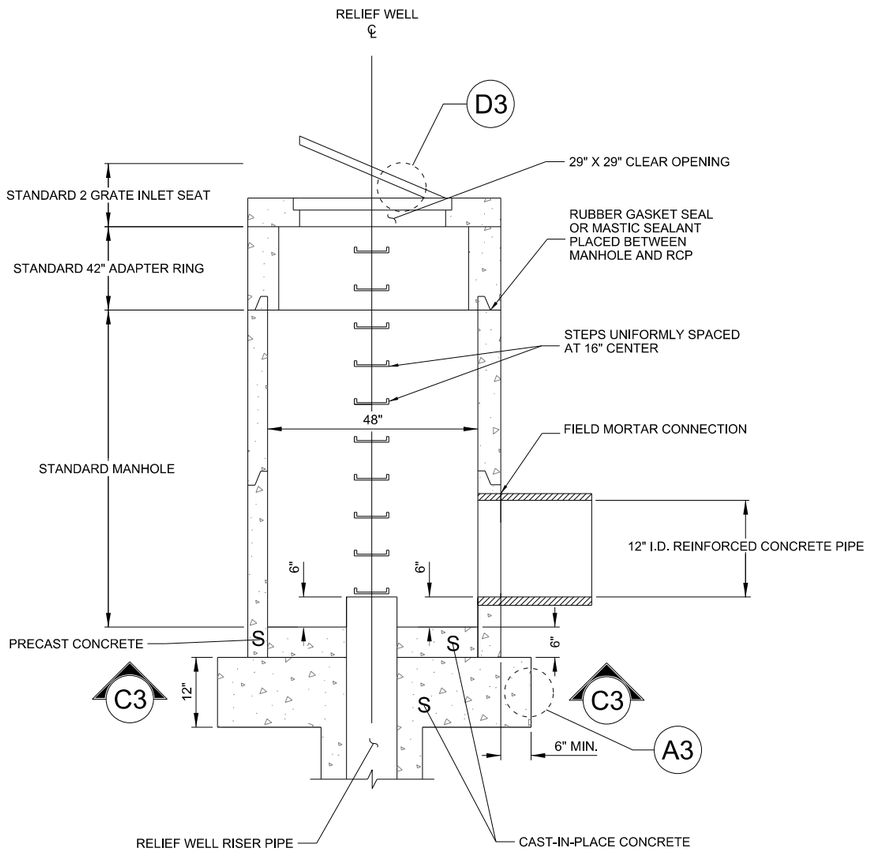

B1 RELIEF WELL (RW) MANHOLE
NOT TO SCALE

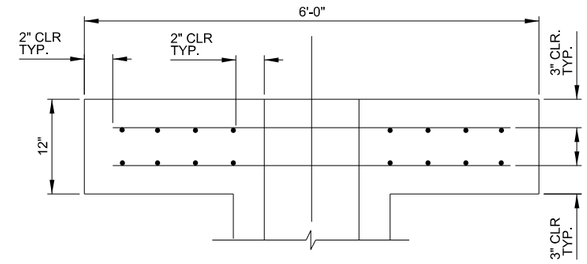

C3 SECTION
NOT TO SCALE

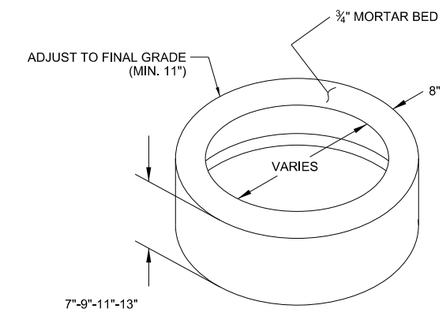

C5 STANDARD ADAPTER RING
NOT TO SCALE

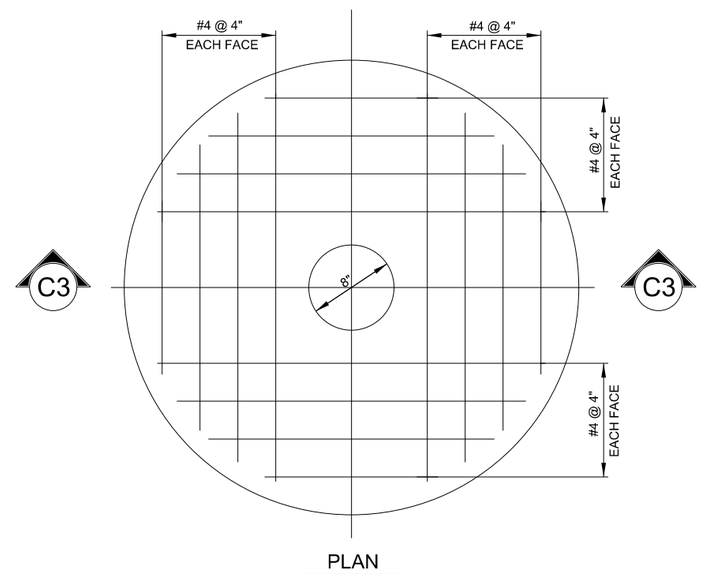

PLAN

A3 BASE REINFORCING DETAIL
NOT TO SCALE

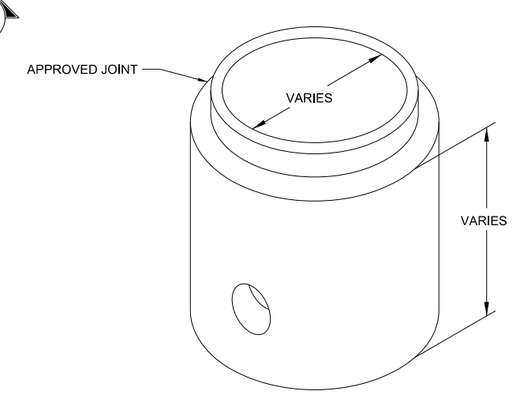

A5 STANDARD INLET MANHOLE BASE
NOT TO SCALE

US Army Corps of Engineers®

MARK	DESCRIPTION	DATE	APPR.

MARK	DESCRIPTION	DATE	APPR.

U.S. ARMY CORPS OF ENGINEERS
ST. LOUIS DISTRICT
ST. LOUIS, MO 63103

DESIGNED BY: C.WHEELER
DWN BY: TJD
CKD BY: RPG
SUBMITTED BY: PATRICK J CONROY, P.E.
PLOT SCALE: 1:1
PLOT DATE: No
SIZE: ANSI D
FILE NAME: MOCH13_B-302.dgn
DATE: JULY 2013
SOLICITATION NO.: W912P9-13-R-0720
CONTRACT NO.: CONTRACT NO.
FILE NUMBER: MOCH13

MONARCH-CHESTERFIELD LEVEE DISTRICT
RELIEF WELLS
MISSOURI RIVER
ST. LOUIS COUNTY, MISSOURI

TYPE "T" RELIEF WELL OUTLET SYSTEM
MANHOLE DETAILS

SHEET IDENTIFICATION
B-302

GENERAL SHEET NOTES:

1. PRECAST CONCRETE PRODUCTS SHALL BE DESIGNED BY THE MANUFACTURER TO WITHSTAND AN AASHTO H20 LOADING.
2. MANHOLE FRAME AND LID SHALL BE DESIGNED BY THE MANUFACTURER TO WITHSTAND AN AASHTO H20 LOADING.
3. LISTED ELEVATION IS BASED ON SURVEY INFORMATION. MANHOLE TO BE FLUSH WITH GROUND.

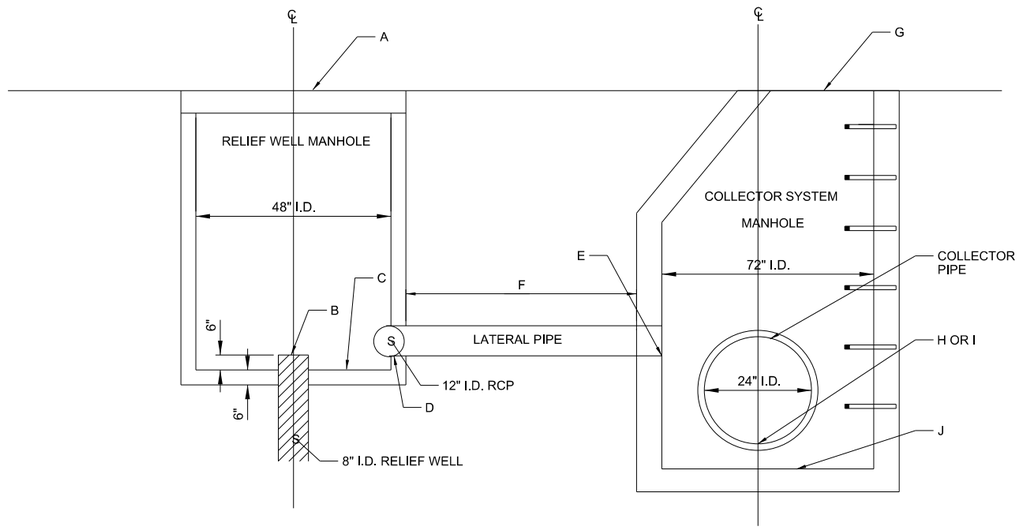

C2 DUAL MANHOLE DETAIL
NOT TO SCALE

RELIEF WELLS MANHOLES AND COLLECTOR MANHOLES INFORMATION TABLE

RELIEF WELL NUMBER	STATION	CENTER OF RELIEF WELL MANHOLE		TOP OF RW MANHOLE EL. "A"	TOP OF RISER PIPE EL. "B"	RW MANHOLE BOTTOM SLAB EL. "C"	LATERAL PIPE US INLET INVERT EL. "D"	LATERAL PIPE DS INLET INVERT EL. "E"	LATERAL DS PIPE LENGTH "F"	CENTER OF COLLECTOR MANHOLE		TOP OF COLLECTOR MANHOLE EL. "G"	COLLECTOR FLOWLINE INLET INV EL. "H"	COLLECTOR FLOWLINE OUTLET INV EL. "I"	COLL. MANHOLE BOTTOM SLAB EL. "J"
		NORTHING	EASTING							NORTHING	EASTING				
MCRW-01-13	STA. -5+75.12	N 1033406.00	E 797849.00	463.21	455.00	454.50	455.00	454.75	6.00	N 1033395.50	E 797849.00	463.21	N/A	453.50	453.00
MCRW-02-13	STA. -2+90.01	N 1033414.00	E 798134.00	463.77	455.00	454.50	455.00	454.75	6.00	N 1033403.50	E 798134.00	463.77	453.26	453.15	452.65
MCRW-03-13	STA. -1+32.00	N 1033415.00	E 798292.00	462.39	455.00	454.50	455.00	454.75	6.00	N 1033404.50	E 798292.00	462.39	452.95	452.85	452.35
MCRW-04-13	STA. 0+00.00	N 1033414.00	E 798424.00	459.77	455.00	454.50	455.00	454.75	6.00	N 1033403.50	E 798424.00	459.77	452.75	452.65	452.15
MCRW-05-13	STA. 1+63.44	N 1033426.00	E 798587.00	458.74	455.00	454.50	455.00	454.75	6.00	N 1033415.50	E 798587.00	458.74	453.00	452.90	452.40
MCRW-06-13	STA. 5+43.33	N 1033452.00	E 798966.00	458.55	455.00	454.50	455.00	454.75	6.00	N 1033441.50	E 798966.00	458.55	N/A	453.25	452.75

US Army Corps of Engineers®

MARK	DESCRIPTION	DATE	APPR.

MARK	DESCRIPTION	DATE	APPR.

U.S. ARMY CORPS OF ENGINEERS
ST. LOUIS DISTRICT
ST. LOUIS, MO 63103

DESIGNED BY: C.WHEELER
DWN BY: TJD
CKD BY: RPG
SUBMITTED BY: PATRICK J CONROY, P.E.
PLOT SCALE: N/A
PLOT DATE: 11/7/2013
SIZE: ANSI D
FILE NAME: MOCH13_B-501.dgn
DATE: JULY 2013
SOLICITATION NO.: W912P8-13-R-0720
CONTRACT NO.: CONTRACT NO.
FILE NUMBER: MOCH13

MONARCH-CHESTERFIELD LEVEE DISTRICT
RELIEF WELLS
MISSOURI RIVER
ST. LOUIS COUNTY, MISSOURI

MANHOLE SCHEDULE AND
RELIEF WELL MANHOLE DETAILS

SHEET IDENTIFICATION
B-501

GENERAL SHEET NOTES:

1. PRECAST CONCRETE PRODUCTS SHALL BE DESIGNED BY THE MANUFACTURER TO WITHSTAND AN AASHTOH20 LOADING.
2. MANHOLE FRAME AND LID SHALL BE DESIGNED BY THE MANUFACTURER TO WITHSTAND AN AASHTO H20 LOADING.
3. T= 6" MINIMUM
4. A RUBBER GASKET SEAL OR MASTIC SEALANT SHALL BE PLACED BETWEEN MANHOLE SECTIONS
5. FOR PIPE BACKFILL DETAIL SEE C-503

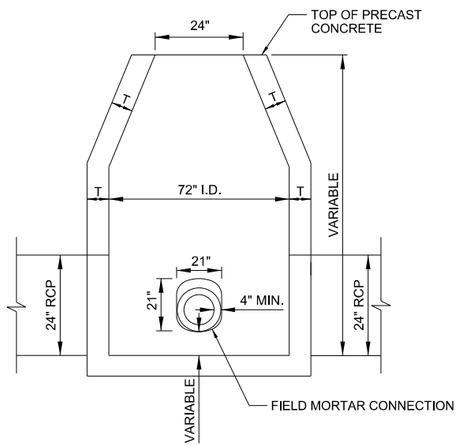

C1 SECTIONAL VIEW LOOKING NORTH
NOT TO SCALE

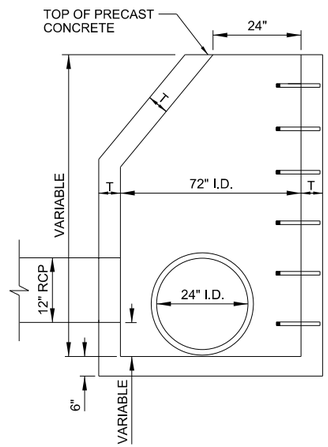

C2 SECTIONAL VIEW LOOKING WEST
NOT TO SCALE

COLLECTOR SYSTEM MANHOLE DETAIL
NOT TO SCALE

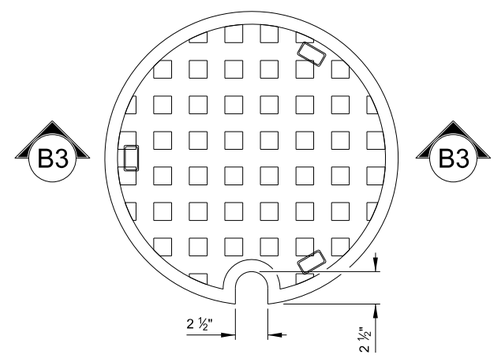

PLAN

CAST CLOSED LID
NOT TO SCALE

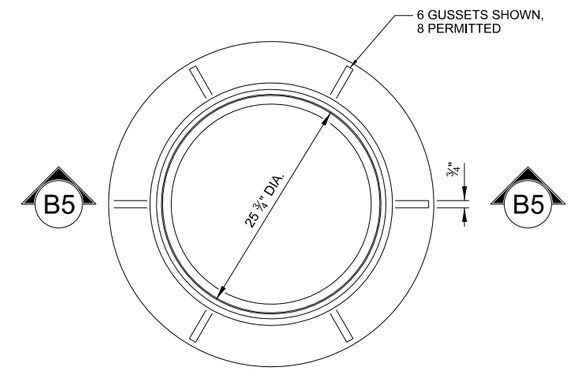

PLAN

CAST FRAME
NOT TO SCALE

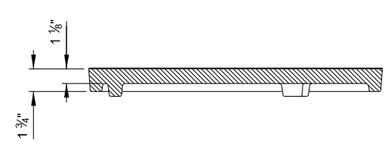

B3 SECTION
NOT TO SCALE

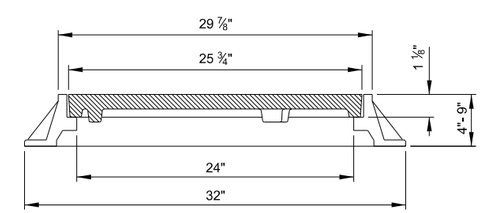

B5 SECTION
NOT TO SCALE

HEAVY DUTY MANHOLE FRAME AND SOLID LID
NOT TO SCALE

US Army Corps of Engineers®

MARK	DESCRIPTION	DATE	APPR.	MARK	DESCRIPTION	DATE	APPR.

U.S. ARMY CORPS OF ENGINEERS
ST. LOUIS DISTRICT
ST. LOUIS, MO 63103

DESIGNED BY: C.WHEELER
DWN BY: TJD
CKD BY: RPG
SUBMITTED BY: PATRICK J CONROY, P.E.
DATE: JULY 2013
SOLICITATION NO.: W912P8-13-R-0720
CONTRACT NO.: CONTRACT NO.
PLOT SCALE: 1:1
PLOT DATE: N/A
FILE NUMBER: MOCH13
SIZE: ANSI D
FILE NAME: MOCH13_B-502.dgn

MONARCH-CHESTERFIELD LEVEE DISTRICT
RELIEF WELLS
MISSOURI RIVER
ST. LOUIS COUNTY, MISSOURI

SEEPAGE COLLECTOR SYSTEM
MANHOLE DETAILS

SHEET IDENTIFICATION
B-502

GENERAL SHEET NOTES:

1. PRECAST CONCRETE PRODUCTS SHALL BE DESIGNED BY THE MANUFACTURER TO WITHSTAND AN AASHTO H20 LOADING.
2. MANHOLE FRAME AND LID SHALL BE DESIGNED BY THE MANUFACTURER TO WITHSTAND AN AASHTO H20 LOADING.
3. FIELD MORTAR CONNECTION SHALL BE MADE FOR ALL JOINTS BETWEEN THE MANHOLES AND RCP.
4. MANHOLES MH-1 AND MH-6 HAVE COLLECTOR PIPE ON ONE SIDE OF MANHOLE ONLY.
5. GEOTEXTILE WRAPPED RCP JOINT DETAIL APPLIES TO 24" RCP PIPES BETWEEN MANHOLES MH-1 THRU MH-9.

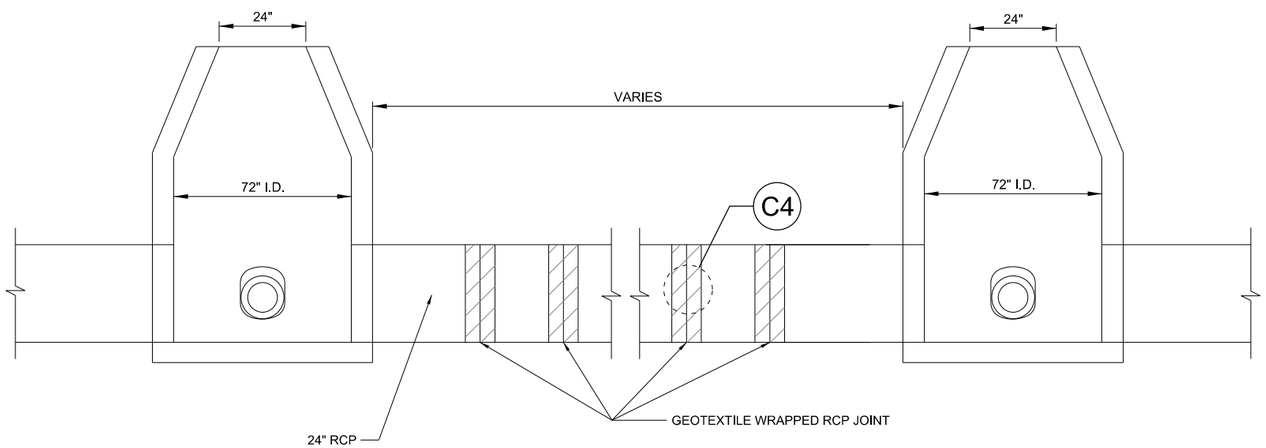

B1 24" RCP COLLECTOR PIPE ELEVATION DETAIL
NOT TO SCALE

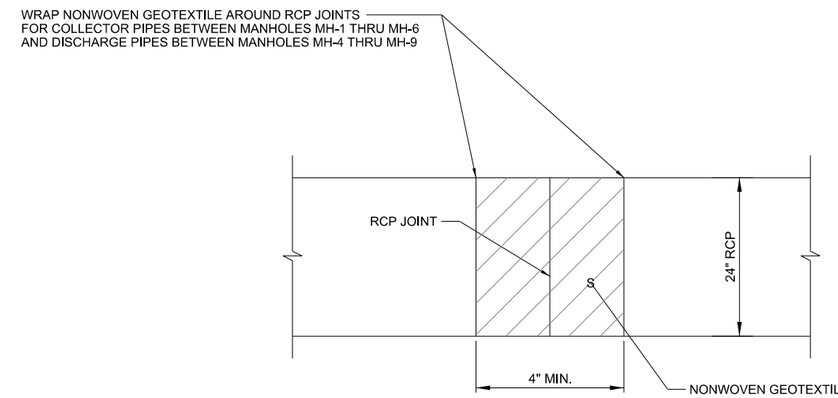

C4 GEOTEXTILE WRAPPED RCP JOINT DETAIL
NOT TO SCALE

US Army Corps of Engineers®

MARK	DESCRIPTION	DATE	APPR.	MARK	DESCRIPTION	DATE	APPR.

U.S. ARMY CORPS OF ENGINEERS
ST. LOUIS DISTRICT
ST. LOUIS, MO 63103

DESIGNED BY: C.WHEELER
DWN BY: TJD
CKD BY: RPG
SUBMITTED BY: PATRICK J.CONROY, P.E.
PLOT SCALE: 1:1
PLOT DATE:
SIZE: ANSI D
FILE NAME: MDCH13_B-503.dgn
DATES: JULY 2013
SOLICITATION NO.: W912P9-13-R-0720
CONTRACT NO.: CONTRACT NO.:
FILE NUMBER: MDCH13

MONARCH-CHESTERFIELD LEVEE DISTRICT
RELIEF WELLS
MISSOURI RIVER
ST. LOUIS COUNTY, MISSOURI

SEEPAGE COLLECTOR SYSTEM
COLLECTOR PIPE DETAILS

SHEET IDENTIFICATION
B-503

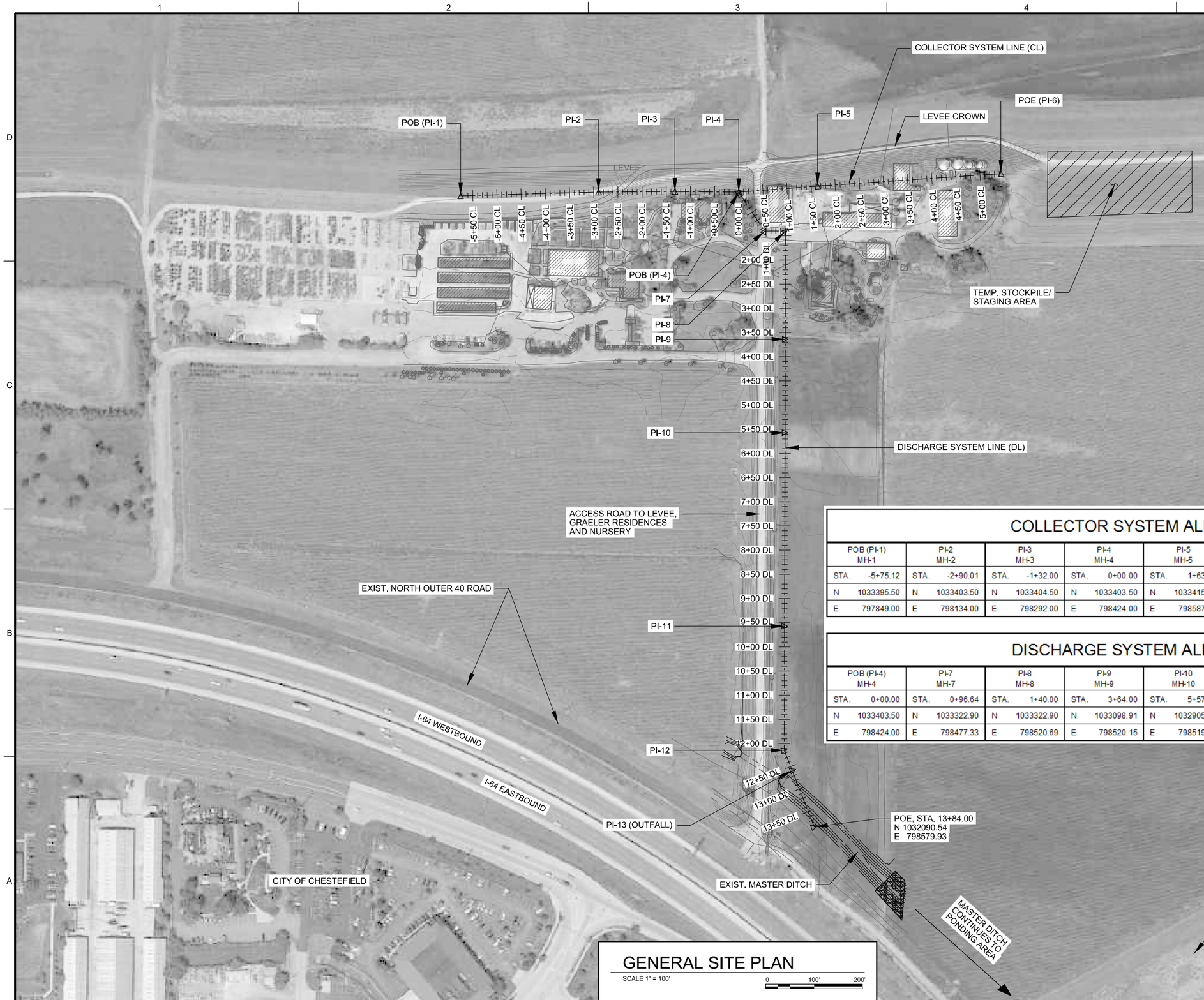

GENERAL SITE PLAN

SCALE 1" = 100'

0 100' 200'

GENERAL SHEET NOTES:

1. FOR DISCHARGE SYSTEM PROFILE, SEE SHEET C-201.
2. FOR COLLECTOR SYSTEM PROFILE, SEE SHEET C-202.
3. USE INFORMATION PROVIDED ON THIS SHEET TO ESTABLISH DISCHARGE SYSTEM AND COLLECTOR SYSTEM ALIGNMENTS.
4. SEE EXCAVATION PLANS ON SHEETS C-401 THRU C-404 FOR LOCATIONS OF MANHOLES AND PIPES FOR DISCHARGE SYSTEM AND COLLECTOR SYSTEM.

LEGEND:

CL	COLLECTOR LINE
DL	DISCHARGE LINE
MH	MANHOLE
PI	POINT OF INTERSECTION
POB	POINT OF BEGINNING
POE	POINT OF ENDING

COLLECTOR SYSTEM ALIGNMENT

POB (PI-1) MH-1	PI-2 MH-2	PI-3 MH-3	PI-4 MH-4	PI-5 MH-5	POE (PI-6) MH-6		
STA. -5+75.12	STA. -2+90.01	STA. -1+32.00	STA. 0+00.00	STA. 1+63.44	STA. 5+43.33		
N 1033395.50	N 1033403.50	N 1033404.50	N 1033403.50	N 1033415.50	N 1033441.50		
E 797849.00	E 798134.00	E 798292.00	E 798424.00	E 798587.00	E 798966.00		

DISCHARGE SYSTEM ALIGNMENT

POB (PI-4) MH-4	PI-7 MH-7	PI-8 MH-8	PI-9 MH-9	PI-10 MH-10	PI-11 MH-11	PI-12 MH-12	PI-13 OUTFALL
STA. 0+00.00	STA. 0+96.64	STA. 1+40.00	STA. 3+64.00	STA. 5+57.20	STA. 9+57.20	STA. 12+14.00	STA. 12+59.00
N 1033403.50	N 1033322.90	N 1033322.90	N 1033098.91	N 1032905.71	N 1032505.71	N 1032248.91	N 1032206.99
E 798424.00	E 798477.33	E 798520.69	E 798520.15	E 798519.69	E 798518.73	E 798518.12	E 798534.48

US Army Corps of Engineers®

MARK	DESCRIPTION	DATE	APPR.	MARK	DESCRIPTION	DATE	APPR.

U.S. ARMY CORPS OF ENGINEERS
ST. LOUIS DISTRICT
ST. LOUIS, MO 63103

DESIGNED BY: JAMES A. MILLS, P.E.
DATE: JULY 2013
DWN BY: LHW
CKD BY: BJD
SOLICITATION NO.: W912P9-13-R-0720
SUBMITTED BY: BRANDON B. LEWIS, P.E.
CONTRACT NO.: CONTRACT NO.
PLOT SCALE: 1:1
PLOT DATE: N/A
FILE NUMBER: MOCH13
SIZE: ANSI D
FILE NAME: MOCH13_C-101.dgn

MONARCH-CHESTERFIELD LEVEE DISTRICT
RELIEF WELLS
MISSOURI RIVER
ST. LOUIS COUNTY, MISSOURI

GENERAL SITE PLAN AND ALIGNMENTS

SHEET IDENTIFICATION
C-101

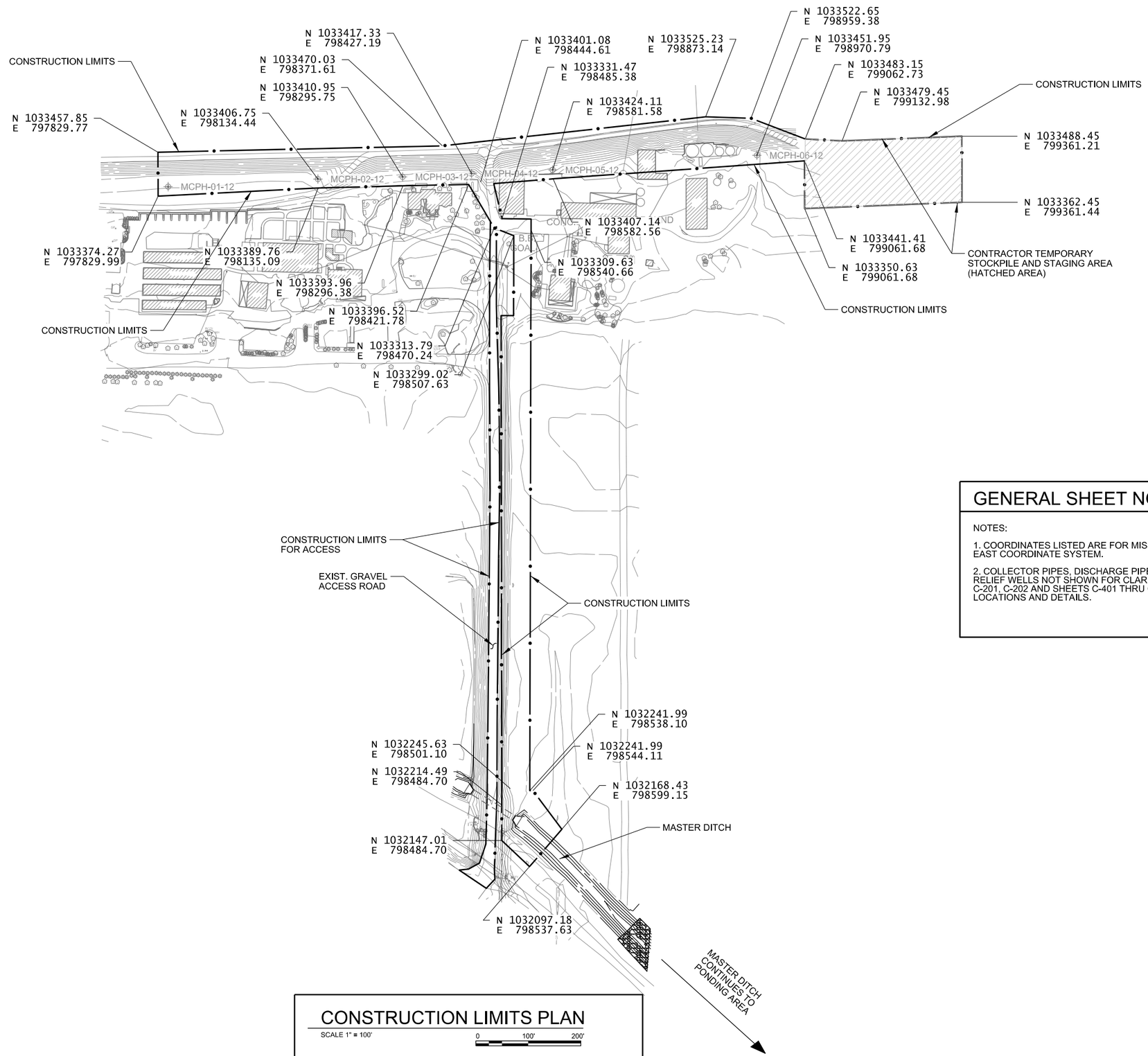

CONSTRUCTION LIMITS PLAN

SCALE 1" = 100'

0 100' 200'

GENERAL SHEET NOTES:

NOTES:

1. COORDINATES LISTED ARE FOR MISSOURI STATE PLANE EAST COORDINATE SYSTEM.

2. COLLECTOR PIPES, DISCHARGE PIPES, MANHOLES AND RELIEF WELLS NOT SHOWN FOR CLARITY. SEE SHEETS C-201, C-202 AND SHEETS C-401 THRU C-404 FOR LOCATIONS AND DETAILS.

US Army Corps of Engineers®

MARK	DESCRIPTION	DATE	APPR.

MARK	DESCRIPTION	DATE	APPR.

U.S. ARMY CORPS OF ENGINEERS
ST. LOUIS DISTRICT
ST. LOUIS, MO 63103

DESIGNED BY: JAMES A. MILLS, P.E.
DWN BY: LHW
CKD BY: BJD
SUBMITTED BY: BRANDON B. LEWIS, P.E.
PLOT SCALE: 1:1
PLOT DATE: No
SIZE: ANSI D
FILE NAME: MOCH13_C-102.dgn
DATE: JULY 2013
SOLICITATION NO.: W912P9-13-R-0720
CONTRACT NO.: CONTRACT NO.
FILE NUMBER: MOCH13

MONARCH-CHESTERFIELD LEVEE DISTRICT
RELIEF WELLS
MISSOURI RIVER
ST. LOUIS COUNTY, MISSOURI

CONSTRUCTION LIMITS PLAN

SHEET IDENTIFICATION
C-102

GENERAL SHEET NOTES:

1. EMBANKMENT FILL FOR FINISH GRADE REQUIRED TO MAINTAIN 3' MIN. COVER OVER DISCHARGE PIPE.
2. STRIP AREA TO RECIEVE ADDITIONAL EMBANKMENT FILL AS NEEDED AND SEED COMPLETED FINISH GRADE AREA.

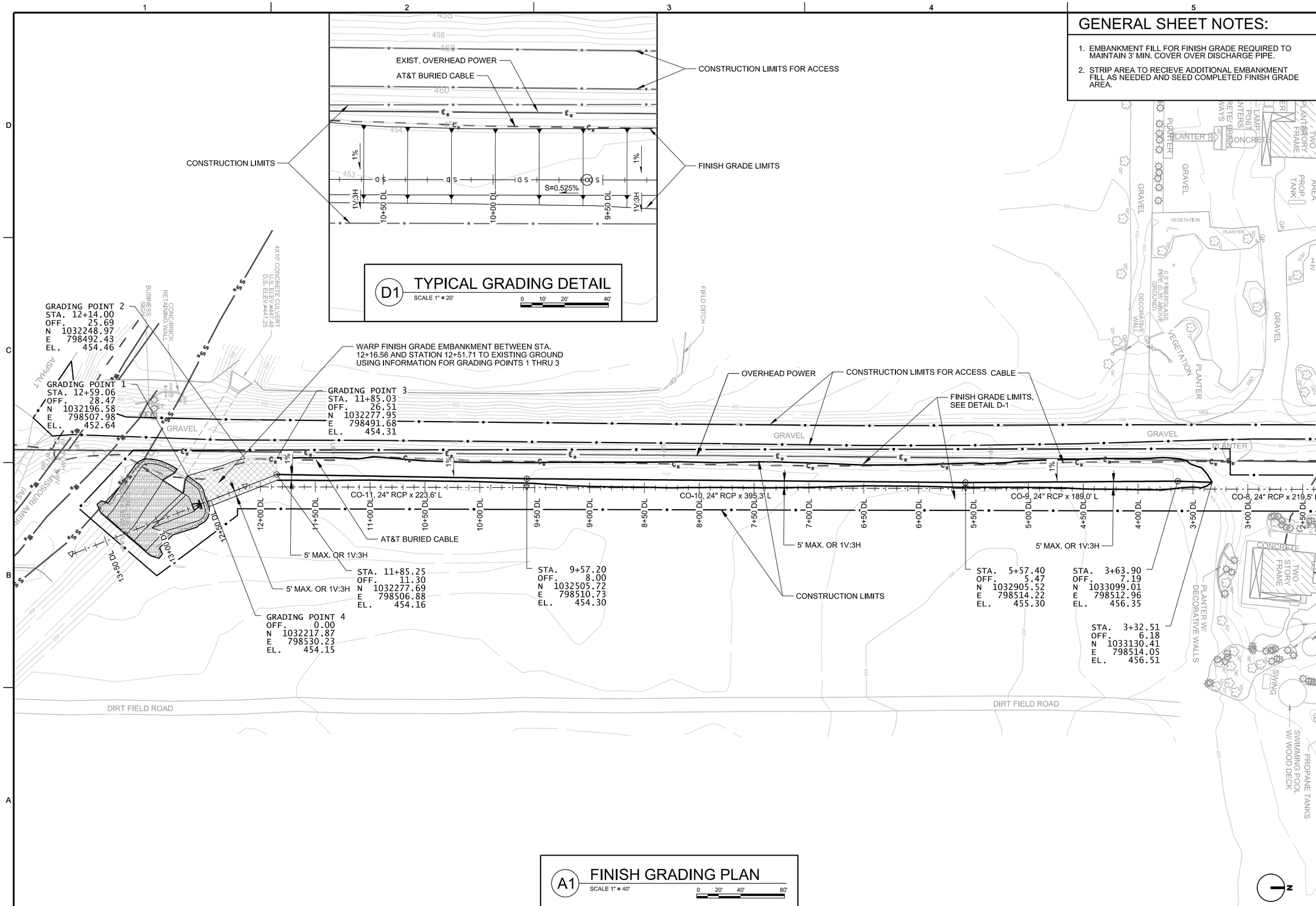

US Army Corps of Engineers®

MARK	DESCRIPTION	DATE	APPR.	MARK	DESCRIPTION	DATE	APPR.

U.S. ARMY CORPS OF ENGINEERS
ST. LOUIS DISTRICT
ST. LOUIS, MO 63103

DESIGNED BY: JAMES A. MILLS, P.E.
DWN BY: LHW
CKD BY: BJD
SUBMITTED BY: BRANDON B. LEWIS, P.E.
PLOT SCALE: 1:1
PLOT DATE:
SIZE: ANSI D
FILE NAME: MOCH13_C-103.dgn
DATE: JULY 2013
SOLICITATION NO.: W912P8-13-B-0720
CONTRACT NO.: CONTRACT NO.
FILE NUMBER: MOCH13

MONARCH-CHESTERFIELD LEVEE DISTRICT
RELIEF WELLS
MISSOURI RIVER
ST. LOUIS COUNTY, MISSOURI

FINISH GRADING PLAN
DISCHARGE PIPE

SHEET IDENTIFICATION
C-103

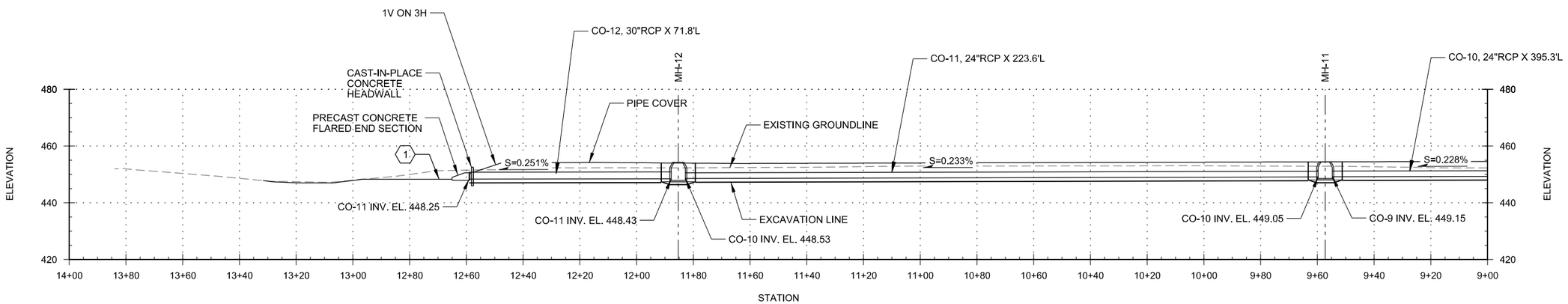

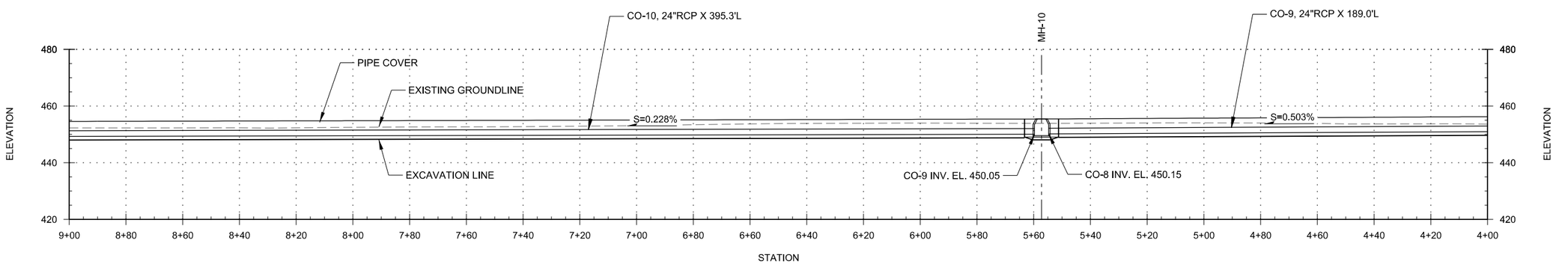

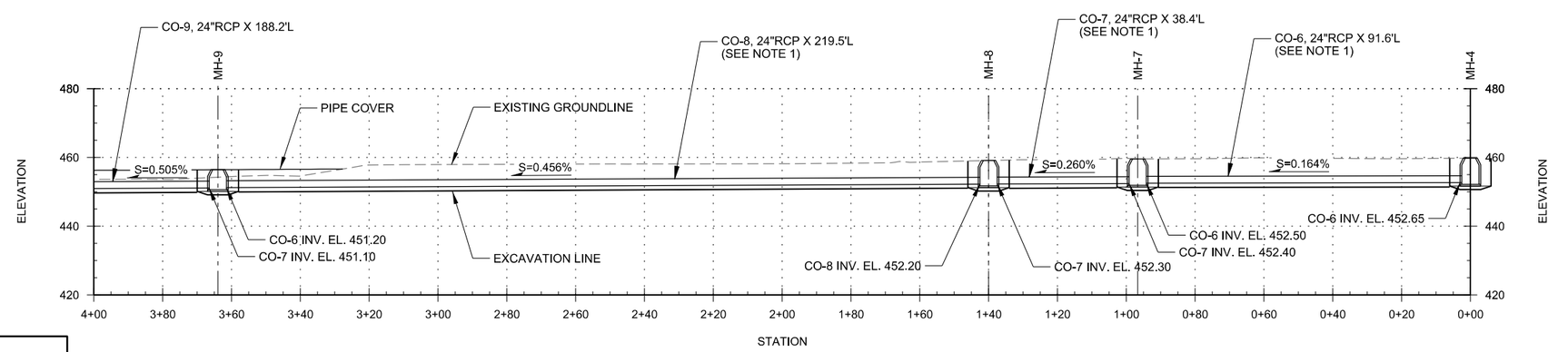

GENERAL SHEET NOTES:

1. WRAP NONWOVEN GEOTEXTILE AROUND RCP PIPE JOINTS FOR DISCHARGE PIPES BETWEEN MANHOLES MH-4 THRU MH-9.
2. FOR EXCAVATION AT MANHOLES, SEE SHEET C-502.
3. FOR EXCAVATION BELOW DISCHARGE PIPES, SEE SHEETS C-401 AND C-402.

⬡ SHEET KEYNOTES

1. RIPRAP, BEDDING, GEOTEXTILE AND EXCAVATION FOR REVETMENT NOT SHOWN FOR CLARITY, SEE SHEET C-501 FOR DETAILS.

DISCHARGE PIPE PROFILE

SCALE 1" = 20'-0"

0 10' 20' 40'

US Army Corps of Engineers®

MARK	DESCRIPTION	DATE	APPR.

MARK	DESCRIPTION	DATE	APPR.

U.S. ARMY CORPS OF ENGINEERS
ST. LOUIS DISTRICT
ST. LOUIS, MO 63103

DESIGNED BY: JAMES A. MILLS, P.E.
DWN BY: LHW
CKD BY: BJD
SUBMITTED BY: BRANDON B. LEWIS, P.E.
PLOT SCALE: 1:1
SIZE: ANSI D
DATE: JULY 2013
SOLICITATION NO.: W912P8-13-R-0720
CONTRACT NO.: CONTRACT NO.
PLOT DATE: Nov 5
FILE NUMBER: MOCH13
FILE NAME: MOCH13_C-201.dgn

MONARCH-CHESTERFIELD LEVEE DISTRICT
RELIEF WELLS
MISSOURI RIVER
ST. LOUIS COUNTY, MISSOURI

DISCHARGE PIPE PROFILE

SHEET IDENTIFICATION
C-201

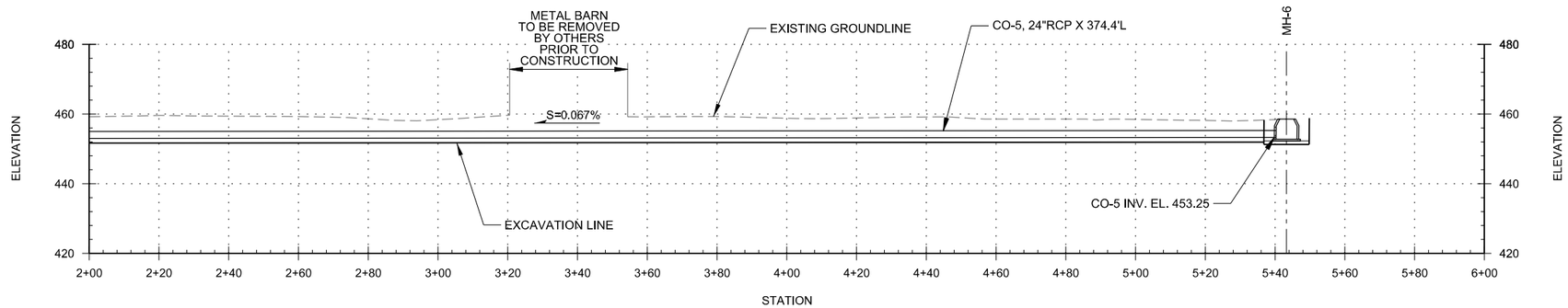

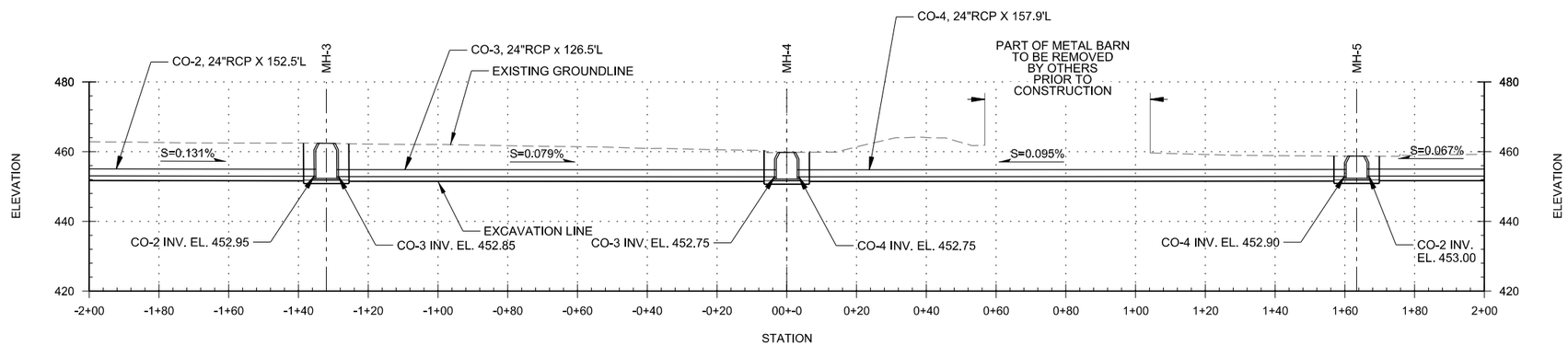

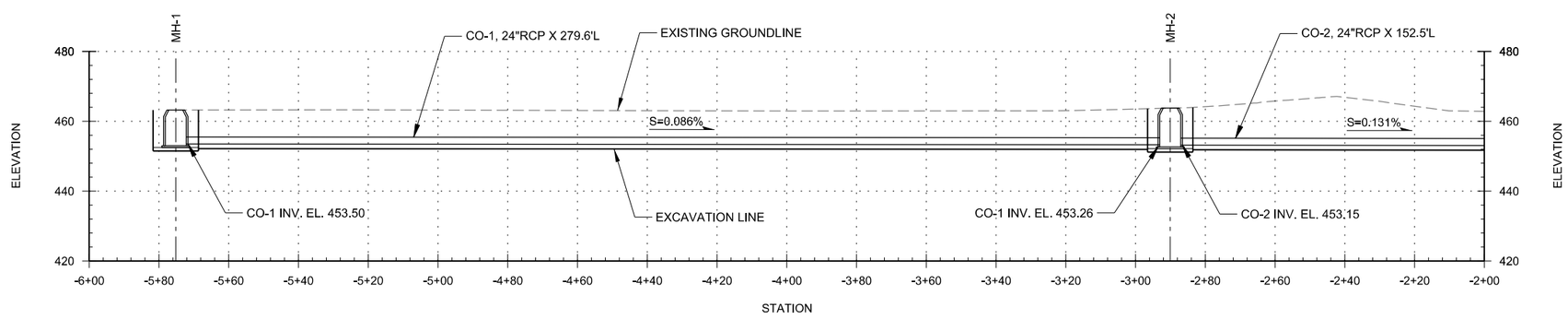

GENERAL SHEET NOTES:

1. WRAP NONWOVEN GEOTEXTILE AROUND RCP PIPE JOINTS FOR COLLECTOR PIPES BETWEEN MANHOLES MH-1 THRU MH-6.
2. FOR EXCAVATION AT MANHOLES, SEE SHEET C-502.
3. FOR EXCAVATION BELOW COLLECTOR PIPES, SEE SHEETS C-403 AND C-404.

COLLECTOR PIPE PROFILE

SCALE 1" = 20'-0

US Army Corps of Engineers®

MARK	DESCRIPTION	DATE	APPR.

MARK	DESCRIPTION	DATE	APPR.

U.S. ARMY CORPS OF ENGINEERS
ST. LOUIS DISTRICT
ST. LOUIS, MO 63103

DESIGNED BY: JAMES A. MILLS, P.E.
DWN BY: LHW
CKD BY: BJD
SUBMITTED BY: BRANDON B. LEWIS, P.E.
PLOT SCALE: 1:1
PLOT DATE:
SIZE: ANSI D
DATE: JULY 2013
SOLICITATION NO.: W912P8-13-R-0720
CONTRACT NO.:
FILE NUMBER: MOC-013
FILE NAME: MOCH13_C-202.dgn

MONARCH-CHESTERFIELD LEVEE DISTRICT
RELIEF WELLS
MISSOURI RIVER
ST. LOUIS COUNTY, MISSOURI

COLLECTOR PIPE PROFILE

SHEET IDENTIFICATION
C-202

GENERAL SHEET NOTES:

1. ALL ELEVATIONS CALLED OUT AT DISCHARGE EXCAVATION ARE LOCATED AT BOTTOM OF DISCHARGE PIPE EXCAVATION, UNLESS OTHERWISE SPECIFIED.
2. FOR EXCAVATION AT MANHOLES, SEE SHEET C-502.
3. FOR DISCHARGE PIPE AND MANHOLE PROFILES, SEE SHEETS C-201 AND C-202.
4. BETWEEN MANHOLES MH-8 AND MH-9, CONTRACTOR SHALL STRICTLY ADHERE TO 6' EXCAVATION WIDTH FOR RCP PIPE TO MINIMIZE DISTURBANCE TO ADJACENT PRIVATE PROPERTY.
5. SEE SHEET C-404 SHEET UTILITY KEYNOTES FOR LOCATIONS WHERE EXCAVATION FOR DISCHARGE PIPE CROSSES EXISTING UTILITIES.

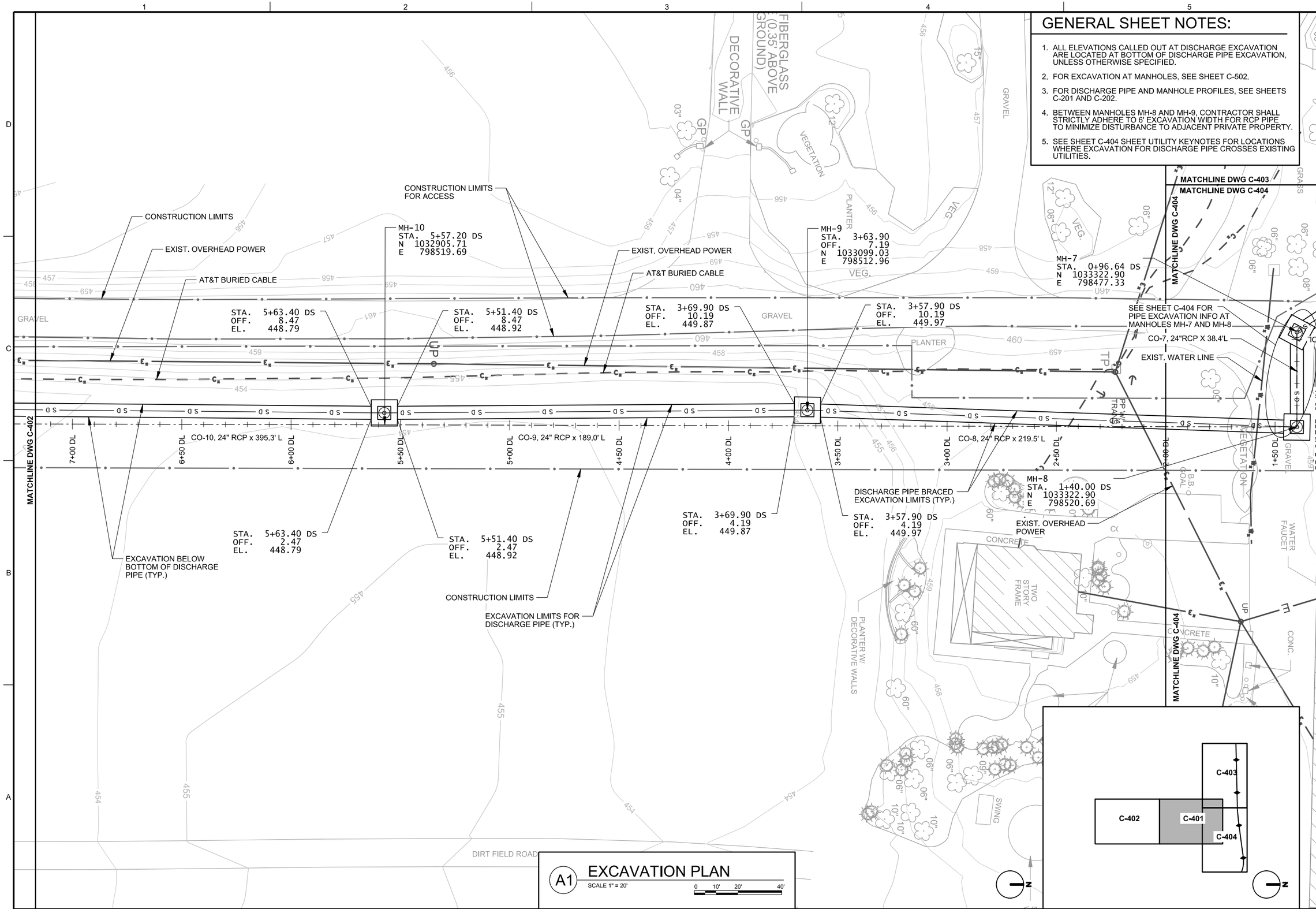

A1 EXCAVATION PLAN

SCALE 1" = 20'

0 10' 20' 40'

US Army Corps of Engineers®

MARK	DESCRIPTION	DATE	APPR.	MARK	DESCRIPTION	DATE	APPR.

U.S. ARMY CORPS OF ENGINEERS
ST. LOUIS DISTRICT
ST. LOUIS, MO 63103

DESIGNED BY: JAMES A. MILLS, P.E.
DWN BY: LHW
CKD BY: BJD
SUBMITTED BY: BRANDON B. LEWIS, P.E.
PLOT SCALE: 1:1
PLOT DATE:
SIZE: ANSI D
FILE NAME: MOCH13_C-401.dgn
DATE: JULY 2013
SOLICITATION NO.: W912P8-13-R-0720
CONTRACT NO.: CONTRACT NO.:
FILE NUMBER: MOCH13

MONARCH-CHESTERFIELD LEVEE DISTRICT
RELIEF WELLS
MISSOURI RIVER
ST. LOUIS COUNTY, MISSOURI

EXCAVATION PLAN

SHEET IDENTIFICATION
C-401

GENERAL SHEET NOTES:

1. ALL ELEVATIONS CALLED OUT AT DISCHARGE PIPE TRENCH EXCAVATION ARE LOCATED AT BOTTOM OF TRENCH EXCAVATION, UNLESS OTHERWISE SPECIFIED.
2. FOR EXCAVATION AT MANHOLES, SEE SHEET C-502.
3. FOR DISCHARGE PIPE AND MANHOLE PROFILES, SEE SHEET C-201.
4. FOR DETAILED PLAN OF OUTFALL PIPE WITH FLARED END SECTION AND REVETMENT, SEE SHEET C-501.

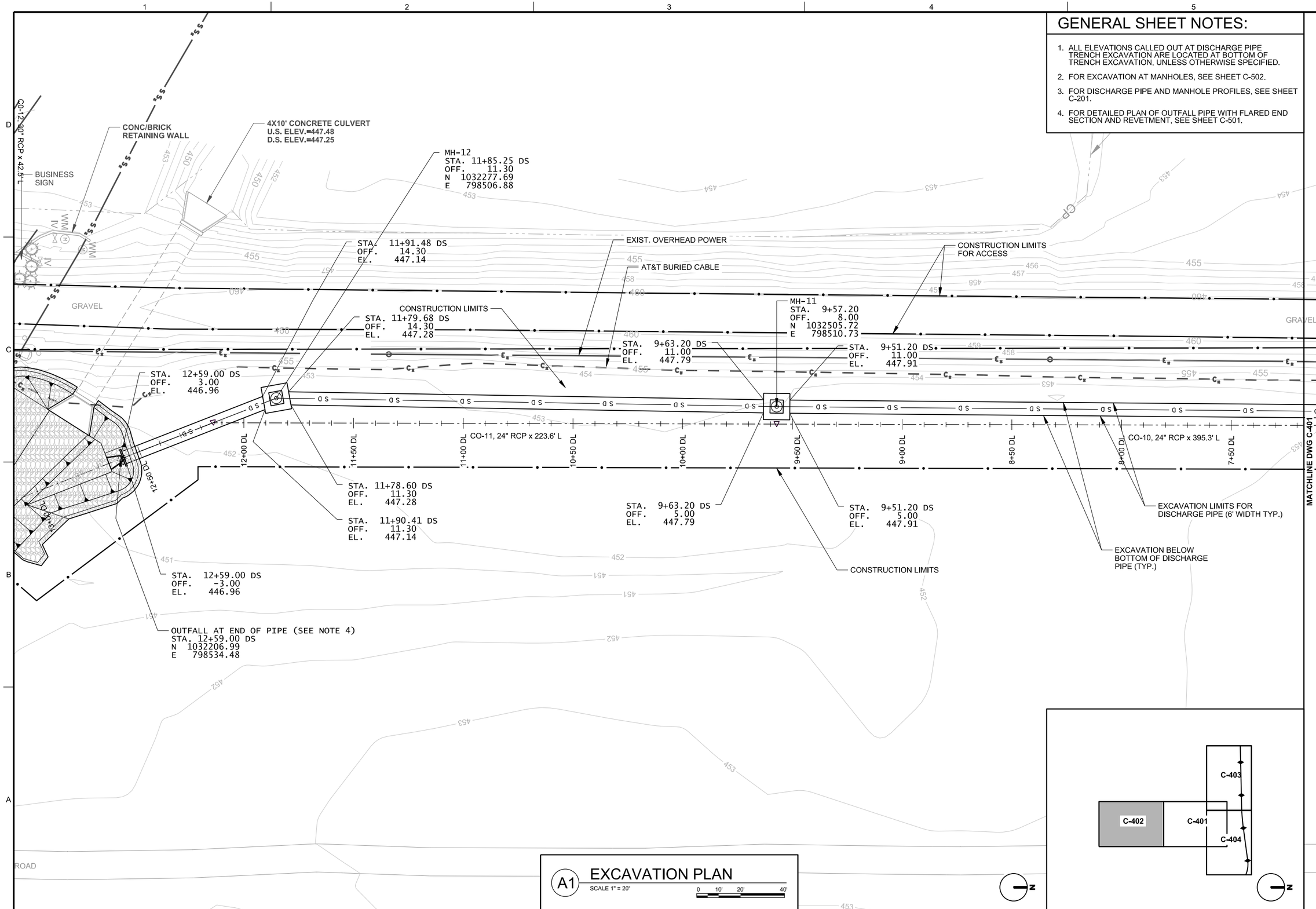

A1 EXCAVATION PLAN

SCALE 1" = 20'

0 10' 20' 40'

US Army Corps of Engineers®

MARK	DESCRIPTION	DATE	APPR.

MARK	DESCRIPTION	DATE	APPR.

U.S. ARMY CORPS OF ENGINEERS
ST. LOUIS DISTRICT
ST. LOUIS, MO 63103

DESIGNED BY: JAMES A. MILLS, P.E.
DWN BY: LHW
CKD BY: BJD
SUBMITTED BY: BRANDON B. LEWIS, P.E.
PLOT SCALE: 1:1
PLOT DATE: No
SIZE: ANSI D
FILE NAME: MOCH13_C-402.dgn
DATE: JULY 2013
SOLICITATION NO.: W912P9-13-R-0720
CONTRACT NO.: CONTRACT NO.
FILE NUMBER: MOCH13

MONARCH-CHESTERFIELD LEVEE DISTRICT
RELIEF WELLS
MISSOURI RIVER
ST. LOUIS COUNTY, MISSOURI

EXCAVATION PLAN

SHEET IDENTIFICATION
C-402

GENERAL SHEET NOTES:

1. ALL EXCAVATION FOR COLLECTOR PIPE AND MANHOLES SHALL BE BRACED EXCAVATION, SEE SPECS.
2. ALL ELEVATIONS CALLED OUT AT COLLECTOR PIPE TRENCH ARE LOCATED AT BOTTOM OF TRENCH EXCAVATION, UNLESS OTHERWISE SPECIFIED.
3. FOR EXCAVATION AT MANHOLES, SEE SHEET C-502.
4. FOR COLLECTOR PIPE AND MANHOLE PROFILES, SEE SHEET C-202.

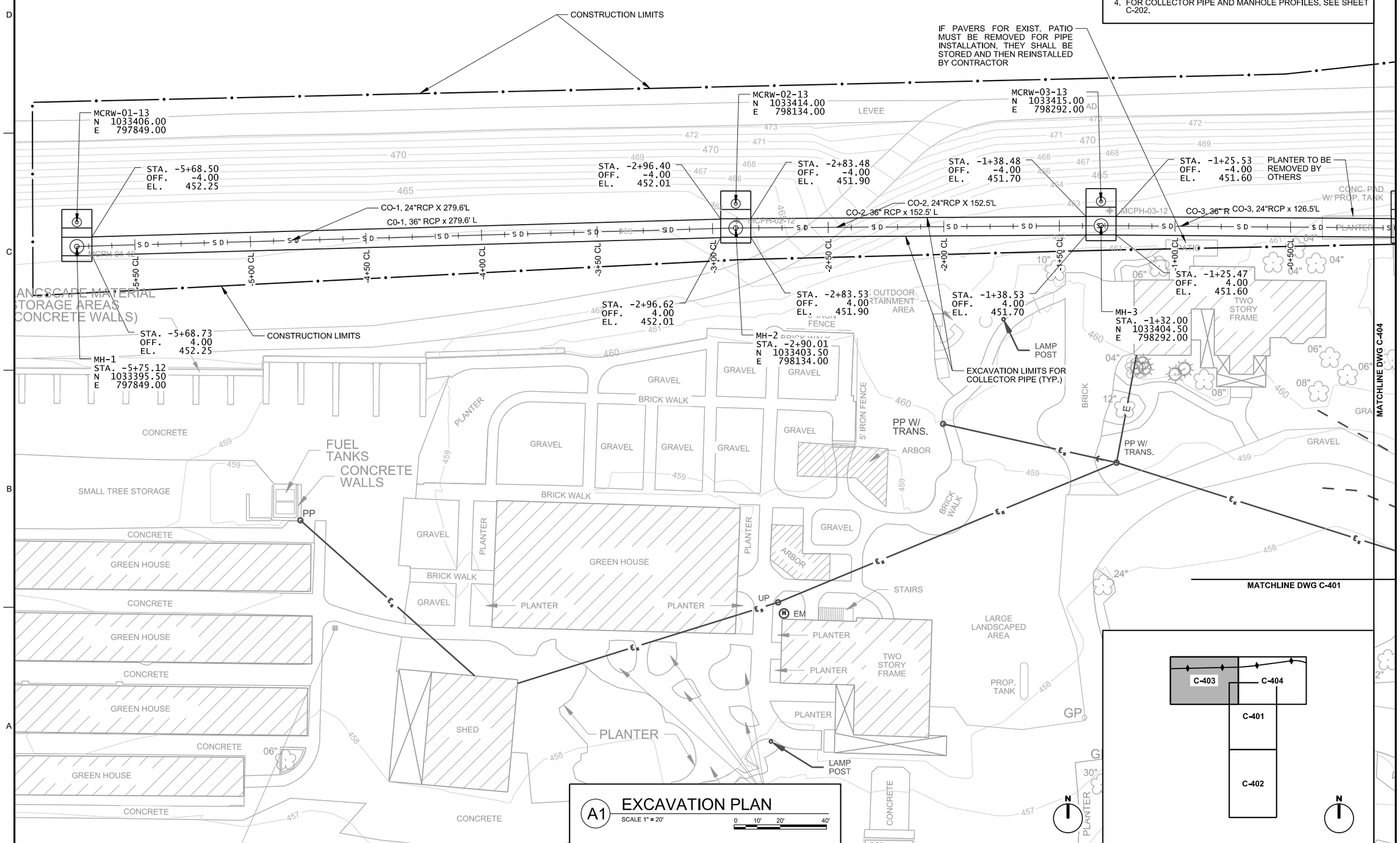

A1 EXCAVATION PLAN

SCALE 1" = 20'

0 10' 20' 40'

US Army Corps of Engineers®

MARK	DESCRIPTION	DATE	APPR.	MARK	DESCRIPTION	DATE	APPR.

U.S. ARMY CORPS OF ENGINEERS
ST. LOUIS DISTRICT
ST. LOUIS, MO 63103

DESIGNED BY: JAMES A. MILLS, P.E.
DWN BY: LHW
CKD BY: BJD
SUBMITTED BY: BRANDON S. LEWIS, P.E.
PLOT SCALE: 1:1
PLOT DATE:
SIZE: ANSI D
FILE NAME: MOCH13_C-403.dgn
DATE: JULY 2013
SOLICITATION NO.: W912P8-13-R-0720
CONTRACT NO.: CONTRACT NO.
FILE NUMBER: MOCH13

MONARCH-CHESTERFIELD LEVEE DISTRICT
RELIEF WELLS
MISSOURI RIVER
ST. LOUIS COUNTY, MISSOURI

EXCAVATION PLAN

SHEET IDENTIFICATION
C-403

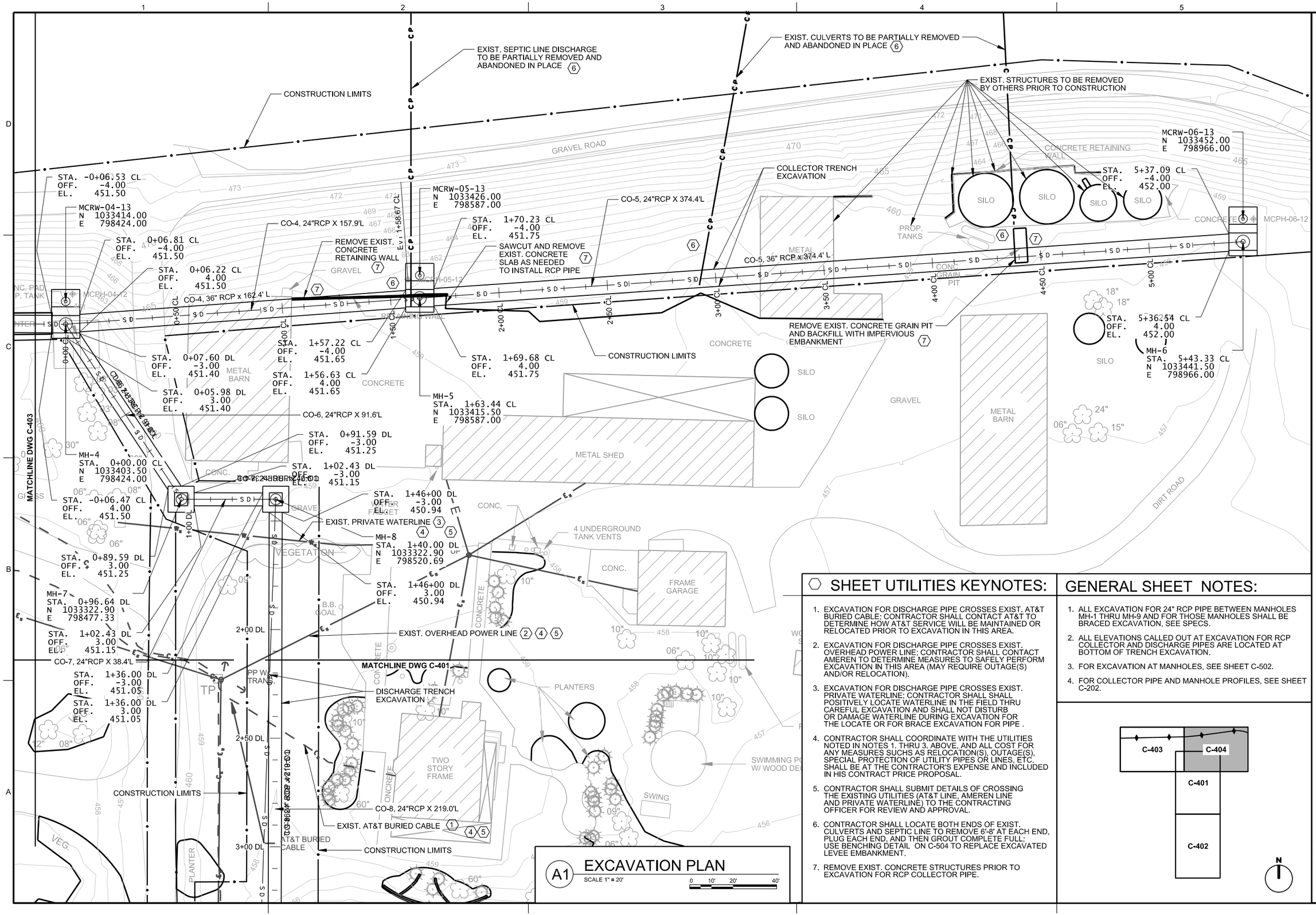

A1 EXCAVATION PLAN

SCALE 1" = 20'

0 10' 20' 40'

SHEET UTILITIES KEYNOTES:

1. EXCAVATION FOR DISCHARGE PIPE CROSSES EXIST. AT&T BURIED CABLE; CONTRACTOR SHALL CONTACT AT&T TO DETERMINE HOW AT&T SERVICE WILL BE MAINTAINED OR RELOCATED PRIOR TO EXCAVATION IN THIS AREA.
2. EXCAVATION FOR DISCHARGE PIPE CROSSES EXIST. OVERHEAD POWER LINE; CONTRACTOR SHALL CONTACT AMEREN TO DETERMINE MEASURES TO SAFELY PERFORM EXCAVATION IN THIS AREA (MAY REQUIRE OUTAGE(S) AND/OR RELOCATION).
3. EXCAVATION FOR DISCHARGE PIPE CROSSES EXIST. PRIVATE WATERLINE; CONTRACTOR SHALL SHALL POSITIVELY LOCATE WATERLINE IN THE FIELD THRU CAREFUL EXCAVATION AND SHALL NOT DISTURB OR DAMAGE WATERLINE DURING EXCAVATION FOR THE LOCATE OR FOR BRACE EXCAVATION FOR PIPE .
4. CONTRACTOR SHALL COORDINATE WITH THE UTILITIES NOTED IN NOTES 1. THRU 3. ABOVE, AND ALL COST FOR ANY MEASURES SUCHS AS RELOCATION(S), OUTAGE(S), SPECIAL PROTECTION OF UTILITY PIPES OR LINES, ETC. SHALL BE AT THE CONTRACTOR'S EXPENSE AND INCLUDED IN HIS CONTRACT PRICE PROPOSAL.
5. CONTRACTOR SHALL SUBMIT DETAILS OF CROSSING THE EXISTING UTILITIES (AT&T LINE, AMEREN LINE AND PRIVATE WATERLINE) TO THE CONTRACTING OFFICER FOR REVIEW AND APPROVAL.
6. CONTRACTOR SHALL LOCATE BOTH ENDS OF EXIST. CULVERTS AND SEPTIC LINE TO REMOVE 6'-8' AT EACH END, PLUG EACH END, AND THEN GROUT COMPLETE FULL; USE BENCHING DETAIL ON C-504 TO REPLACE EXCAVATED LEVEE EMBANKMENT.
7. REMOVE EXIST. CONCRETE STRUCTURES PRIOR TO EXCAVATION FOR RCP COLLECTOR PIPE.

GENERAL SHEET NOTES:

1. ALL EXCAVATION FOR 24" RCP PIPE BETWEEN MANHOLES MH-1 THRU MH-9 AND FOR THOSE MANHOLES SHALL BE BRACED EXCAVATION, SEE SPECS.
2. ALL ELEVATIONS CALLED OUT AT EXCAVATION FOR RCP COLLECTOR AND DISCHARGE PIPES ARE LOCATED AT BOTTOM OF TRENCH EXCAVATION.
3. FOR EXCAVATION AT MANHOLES, SEE SHEET C-502.
4. FOR COLLECTOR PIPE AND MANHOLE PROFILES, SEE SHEET C-202.

US Army Corps of Engineers®

MARK	DESCRIPTION	DATE	APPR.	MARK	DESCRIPTION	DATE	APPR.

U.S. ARMY CORPS OF ENGINEERS
ST. LOUIS DISTRICT
ST. LOUIS, MO 63103

DESIGNED BY: JAMES A. MILLS, P.E.
DWN BY: LHW
CKD BY: BJD
SUBMITTED BY: BRANDON B. LEWIS, P.E.
PLOT SCALE: 1:1
PLOT DATE:
SIZE: ANSI D
FILE NAME: MDCH13_C-404.dgn
DATE: JULY 2013
SOLICITATION NO.: W912P8-13-R-0720
CONTRACT NO.:
FILE NUMBER: MDCH13

MONARCH-CHESTERFIELD LEVEE DISTRICT
RELIEF WELLS
MISSOURI RIVER
ST. LOUIS COUNTY, MISSOURI

EXCAVATION PLAN

SHEET IDENTIFICATION
C-404

GENERAL SHEET NOTES:

1. SEE SHEET C-504 FOR REVETMENT END SECTION DETAIL AND REVETMENT KEY DETAIL.
2. SEE SHEET C-103 FOR GRADING POINTS FOR PIPE COVER BETWEEN MANHOLE MH-12 AND OUTFALL (HATCHED AREA).

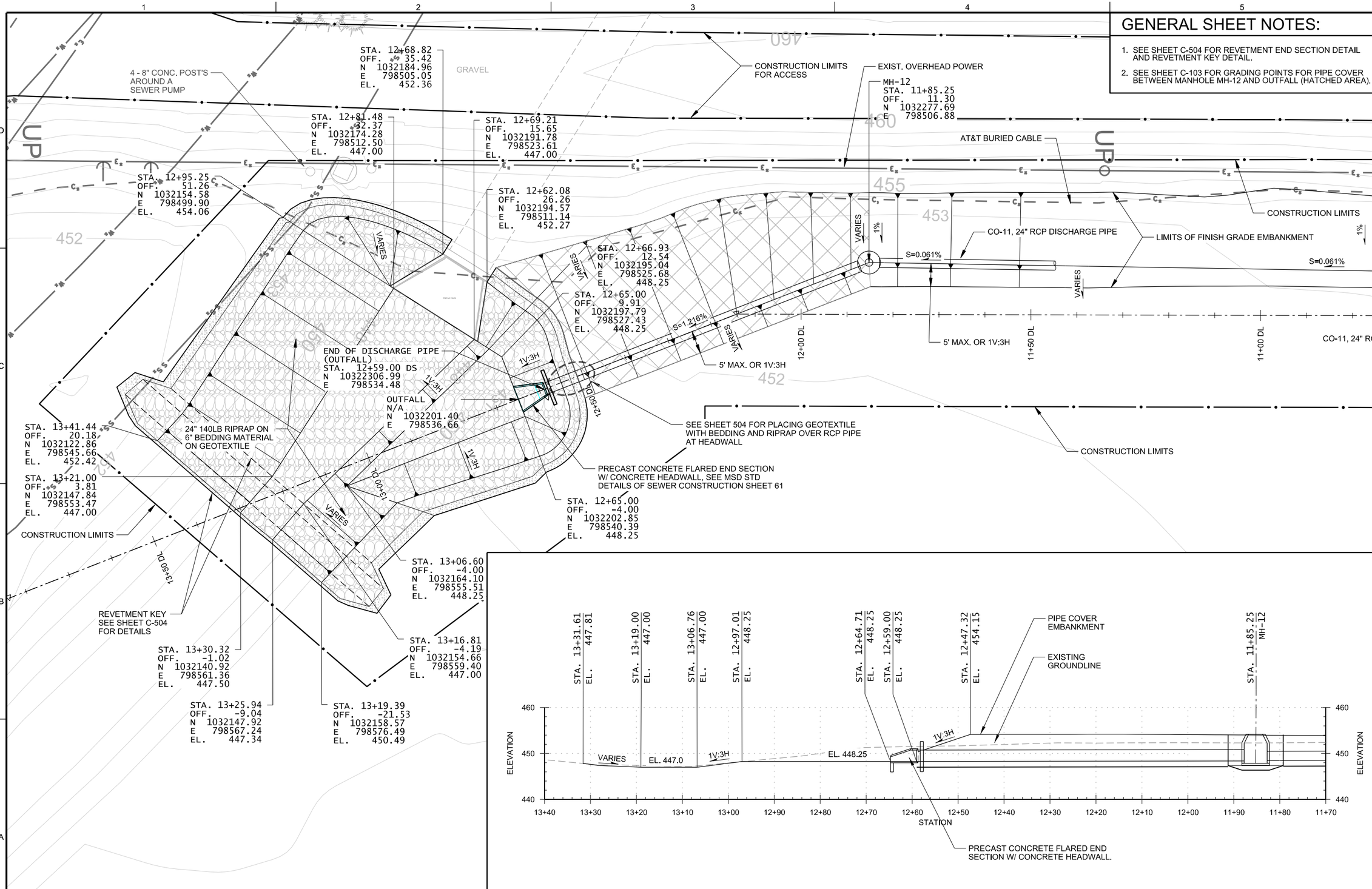

A1 DETAILED DISCHARGE OUTFALL PLAN

SCALE 1" = 10' 0 10' 20'

C-402

A3 DISCHARGE OUTFALL PROFILE

SCALE 1" = 10' 0 10' 20'

US Army Corps of Engineers®

MARK	DESCRIPTION	DATE	APPR.	MARK	DESCRIPTION	DATE	APPR.

U.S. ARMY CORPS OF ENGINEERS

DESIGNED BY: JAMES A. MILLS, P.E.
DWN BY: LHW
CKD BY: SJD
SUBMITTED BY: BRANDON R. LEWIS, P.E
PLOT SCALE: As Shown
PLOT DATE:
SIZE: ANSI D
FILE NAME: MDCH13_C-501.dgn
DATE: JULY 2013
SOLICITATION NO.: W912P9-13-R-0720
CONTRACT NO.: CONTRACT NO.
FILE NUMBER: MDCH13

MONARCH-CHESTERFIELD LEVEE DISTRICT
RELIEF WELLS
MISSOURI RIVER
ST. LOUIS COUNTY, MISSOURI

DISCHARGE OUTFALL DETAILS

SHEET IDENTIFICATION
C-501

GENERAL SHEET NOTES:

1. UTILIZE ALL DETAILS ON THIS SHEET WITH EXCAVATION AND BACKFILL DETAILS SHOWN ON SHEET C-503 AND EXCAVATION LIMITS SHOWN ON SHEETS C-401 THRU C-404.

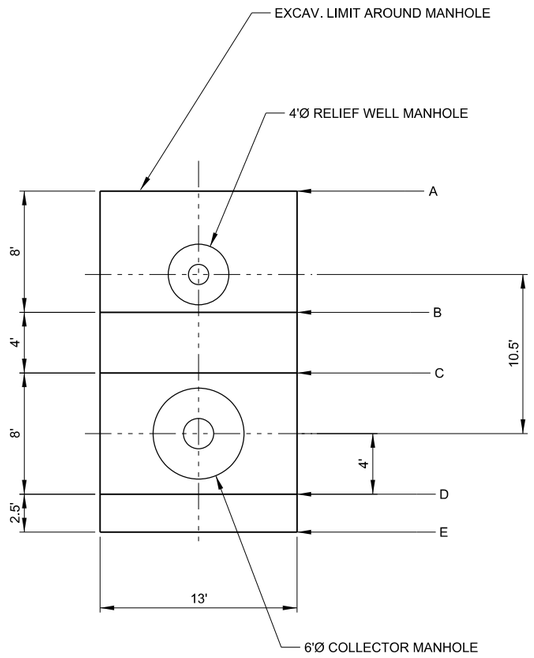

C1 MANHOLE EXCAVATION DETAILS
SCALE 1" = 5'
0 5' 10'

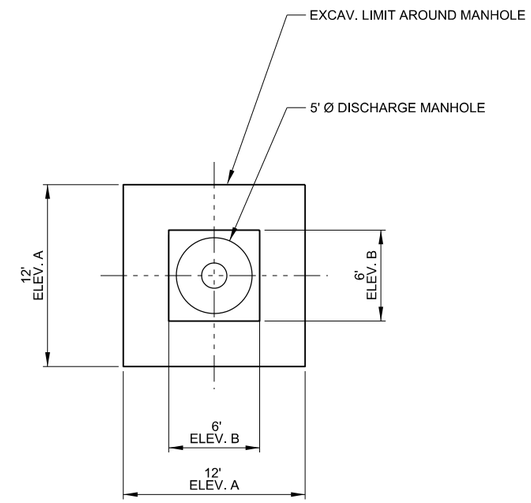

C4 MANHOLE EXCAVATION DETAILS
SCALE 1" = 5'
0 5' 10'

RELIEF WELLS MANHOLES AND COLLECTOR MANHOLES EXCAVATION TABLE

LOCATION	MH-1 EL.	MH-2 EL.	MH-3 EL.	MH-4 EL.	MH-5 EL.	MH-6 EL.
EXISTING GROUND (AT COLLECTOR MANHOLE)	463.21	463.77	462.39	459.77	458.74	458.55
EXCAV. BOTTOM RW MANHOLE, "A"	454.00	454.00	454.00	454.00	454.00	454.00
EXCAV. BOTTOM RW MANHOLE, "B"	454.00	454.00	454.00	454.00	454.00	454.00
EXCAV. BOTT. COLLECTOR MANHOLE/BEDDING, "C"	451.5	451.15	450.85	450.65	450.90	451.25
FLOWLINE IN	NA	453.26	452.95	452.75	453.00	NA
FLOWLINE OUT	453.5	453.15	452.85	452.65	452.90	453.25
EXCAV. BOTT. COLLECTOR MANHOLE/BEDDING, "C"	451.5	451.15	450.85	450.65	450.90	451.25
TOP OF BEDDING, "E"	452.5	452.15	451.85	451.65	451.90	452.25

DISCHARGE MANHOLES EXCAVATION TABLE

LOCATION	MH-4 EL.	MH-7 EL.	MH-8 EL.	MH-9 EL.	MH-10 EL.	MH-11 EL.	MH-12 EL.
EXISTING GROUND (AT COLLECTOR MANHOLE)	459.77	459.53	459.09	454.25	453.89	452.90	452.31
TOP OF BEDDING, "A"	451.65	451.40	451.20	450.10	449.05	448.05	447.43
EXCAV. BOTT. MANHOLE/BEDDING, "B"	450.65	450.40	450.20	449.10	448.05	447.05	446.43
FLOWLINE IN	452.75*	452.50	452.30	451.20	450.15	449.15	448.53
FLOWLINE OUT	452.65	452.40	452.20	451.10	450.05	449.05	448.43
EXCAV. BOTT. MANHOLE/BEDDING, "B"	450.65	450.40	450.20	449.10	448.05	447.05	446.43
TOP OF BEDDING, "A"	451.65	451.40	451.20	450.10	449.05	448.05	447.43

*FLOWLINE IN AT MH-4 IS FROM COLLECTOR PIPES

US Army Corps of Engineers®

MARK	DESCRIPTION	DATE	APPR.

MARK	DESCRIPTION	DATE	APPR.

U.S. ARMY CORPS OF ENGINEERS
ST. LOUIS DISTRICT
ST. LOUIS, MO 63103

DESIGNED BY: JAMES A. MILLS, P.E.
DATE: JULY 2013
DWN BY: LHW
CKD BY: BJD
SOLICITATION NO.: W912P8-13-R-0720
SUBMITTED BY: BRANDON B. LEWIS, P.E.
CONTRACT NO.: CONTRACT NO.
PLOT SCALE: 1:1
PLOT DATE: N/A
FILE NUMBER: MOCH13
SIZE: ANSI D
FILE NAME: MOCH13_C-502.dgn

MONARCH-CHESTERFIELD LEVEE DISTRICT
RELIEF WELLS
MISSOURI RIVER
ST. LOUIS COUNTY, MISSOURI

MANHOLE EXCAVATION DETAILS

SHEET IDENTIFICATION
C-502

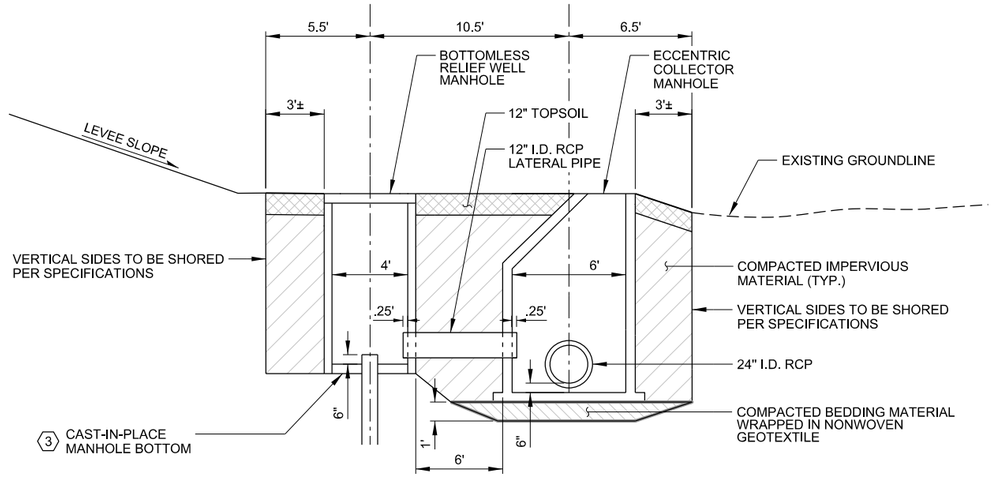

DUAL MANHOLE - RELIEF WELLS AND COLLECTOR EXCAVATION AND BACKFILL

C1

NOT TO SCALE

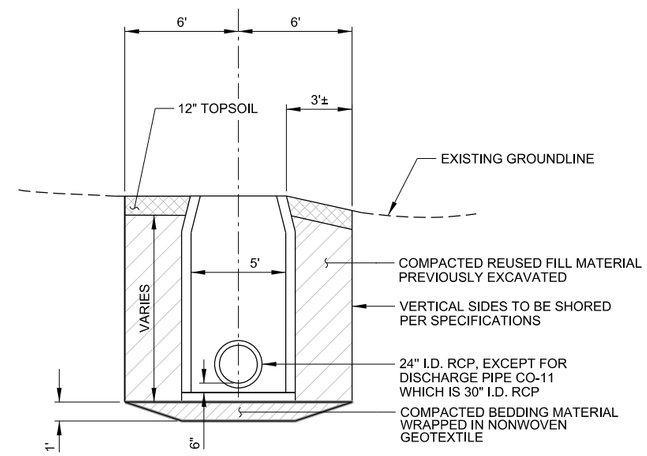

MANHOLE - DISCHARGE PIPE EXCAVATION AND BACKFILL

C4

NOT TO SCALE

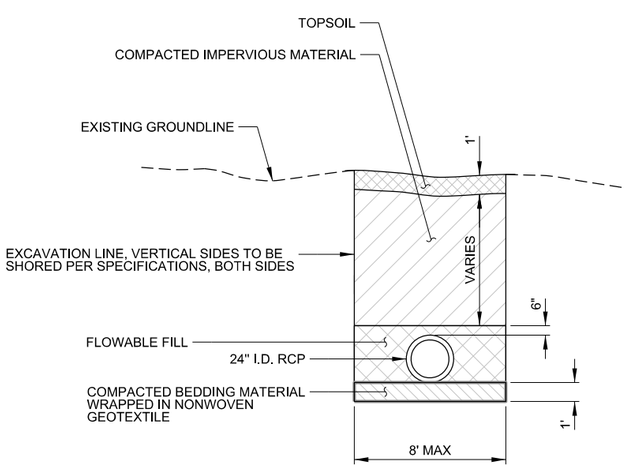

COLLECTOR PIPES EXCAVATION AND BACKFILL MANHOLE MH-1 TO MH-6

A1

NOT TO SCALE

1 2

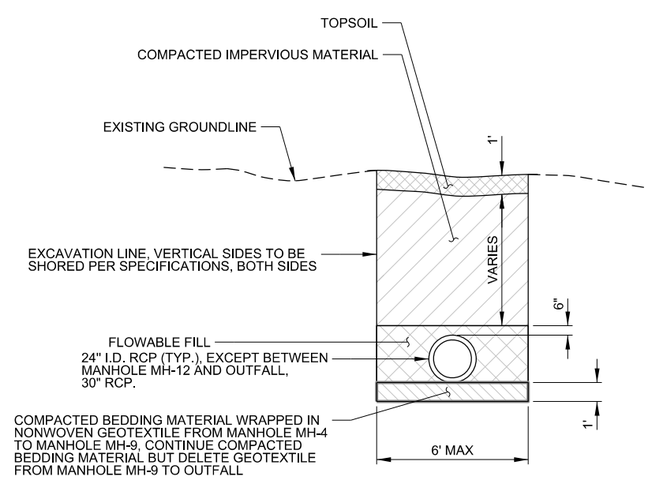

DISCHARGE PIPES EXCAVATION AND BACKFILL MANHOLE MH-4 TO MH-12

A3

NOT TO SCALE

1 2

GENERAL SHEET NOTES:

1. UTILIZE ALL DETAILS ON THIS SHEET WITH MANHOLE EXCAVATION DETAILS SHOWN ON SHEET C-502 AND EXCAVATION LIMITS SHOWN ON SHEET C-401 THRU C-404.
2. CONTRACTOR SHALL STRIP 12" OF TOPSOIL IN EXCAVATION AREAS, STOCKPILE, AND REUSE TOPSOIL FOR FINISH GRADE AND ESTABLISHMENT OF TURF.

SHEET KEYNOTES

1. ALL BEDDING MATERIAL FOR PIPES AND MANHOLES FROM MANHOLE MH-1 TO MH-9 SHALL BE COMPLETELY WRAPPED WITH NONWOVEN GEOTEXTILE. THE NONWOVEN GEOTEXTILE SHALL HAVE TOP LAPS OF A MINIMUM OF 24 INCHES.
2. ALL PIPE JOINTS FROM MANHOLE MH-1 TO MH-9 SHALL BE COMPLETELY WRAPPED WITH NONWOVEN GEOTEXTILE.
3. 12" CAST-IN-PLACE CONCRETE BASE AT RELIEF WELL NOT SHOWN FOR CLARITY, SEE SHEET B-301.

US Army Corps of Engineers®

MARK	DESCRIPTION	DATE	APPR.	MARK	DESCRIPTION	DATE	APPR.

U.S. ARMY CORPS OF ENGINEERS
ST. LOUIS DISTRICT
ST. LOUIS, MO 63103

DESIGNED BY: JAMES A. MILLS, P.E.
DWN BY: LHW
CKD BY: BJD
SUBMITTED BY: BRANDON R. LEWIS, P.E.
PLOT SCALE: 1:1
PLOT DATE: N/A
SIZE: ANSI D
FILE NAME: MDCH13_C-503.dgn
DATE: JULY 2013
SOLICITATION NO.: W912P8-13-R-0720
CONTRACT NO.: CONTRACT NO.
FILE NUMBER: MDC-013

MONARCH-CHESTERFIELD LEVEE DISTRICT
RELIEF WELLS
MISSOURI RIVER
ST. LOUIS COUNTY, MISSOURI

DETAILS
MANHOLES AND PIPES
EXCAVATION AND BACKFILL

SHEET IDENTIFICATION
C-503

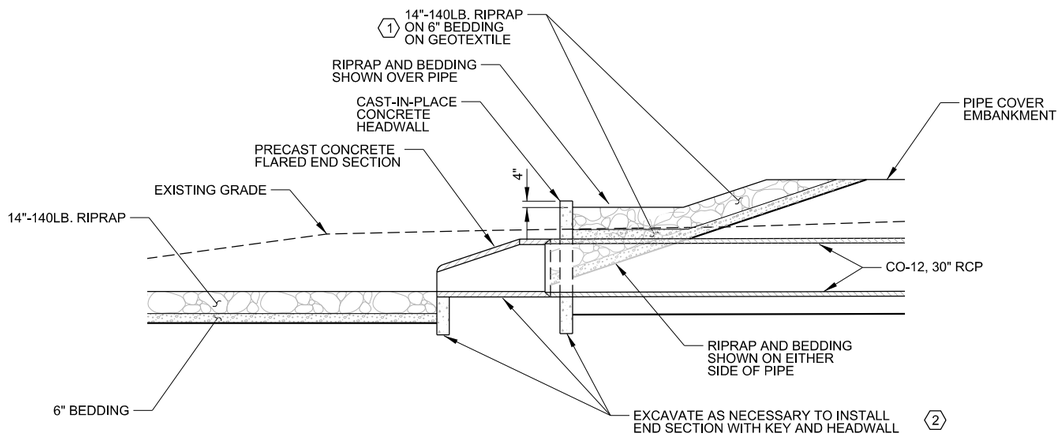

C1 REVETMENT END SECTION DETAIL

NOT TO SCALE

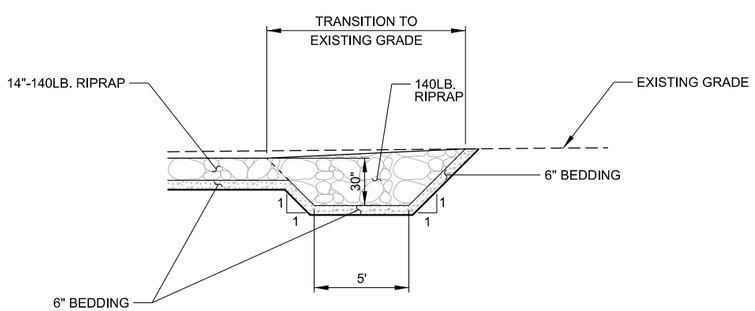

A1 REVETMENT KEY DETAIL 3

NOT TO SCALE

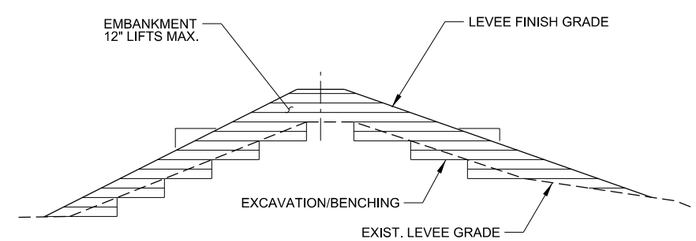

A4 BENCHING DETAIL 5

NOT TO SCALE

GENERAL SHEET NOTES:

1. UTILIZE ALL DETAILS A-1 AND C-1 AND ON THIS SHEET WITH DETAILED DISCHARGE OUTFALL PLAN SHOWN ON SHEET C-502.

SHEET KEYNOTES

1. HAND PLACE BEDDING AND RIPRAP OVER RCP PIPE BEHIND HEADWALL TO AVOID DAMAGING RCP PIPE.
2. CONTRACTOR SHALL SUBMIT SHOP DRAWINGS/CATALOG CUTS OF FLARED END SECTION WITH KEY AND HEADWALL TO THE CONTRACTING OFFICER FOR APPROVAL.
3. FOR LOCATION OF REVEMENT KEY, SEE SHEET C-501.
4. USE BENCHING DETAIL TO RESTORE ANY PORTIONS OF EXCAVATED OR DEGRADED LEVEE TO ORIGINAL FINISH GRADE, SUCH AS FOR PARTIAL REMOVAL OF PIPES, ETC.

US Army Corps of Engineers®

MARK	DESCRIPTION	DATE	APPR.

MARK	DESCRIPTION	DATE	APPR.

U.S. ARMY CORPS OF ENGINEERS
ST. LOUIS DISTRICT
ST. LOUIS, MO 63103

DESIGNED BY: JAMES A. MILLS, P.E.
DWN BY: LHW
CKD BY: BJD
SUBMITTED BY: BRANDON B. LEWIS, P.E
PLOT SCALE: 1:1
SIZE: ANSI D
DATE: MAY 2013
SOLICITATION NO.: SOLICITATION NO.
CONTRACT NO.: CONTRACT NO.
PLOT DATE: N/A
FILE NUMBER: MOC-013
FILE NAME: MOCH13_C-504.dgn

MONARCH-CHESTERFIELD LEVEE DISTRICT
RELIEF WELLS
MISSOURI RIVER
ST. LOUIS COUNTY, MISSOURI

DETAILS
RIPRAP INSTALLATION AND PIPE ABANDONMENT

SHEET IDENTIFICATION
C-504

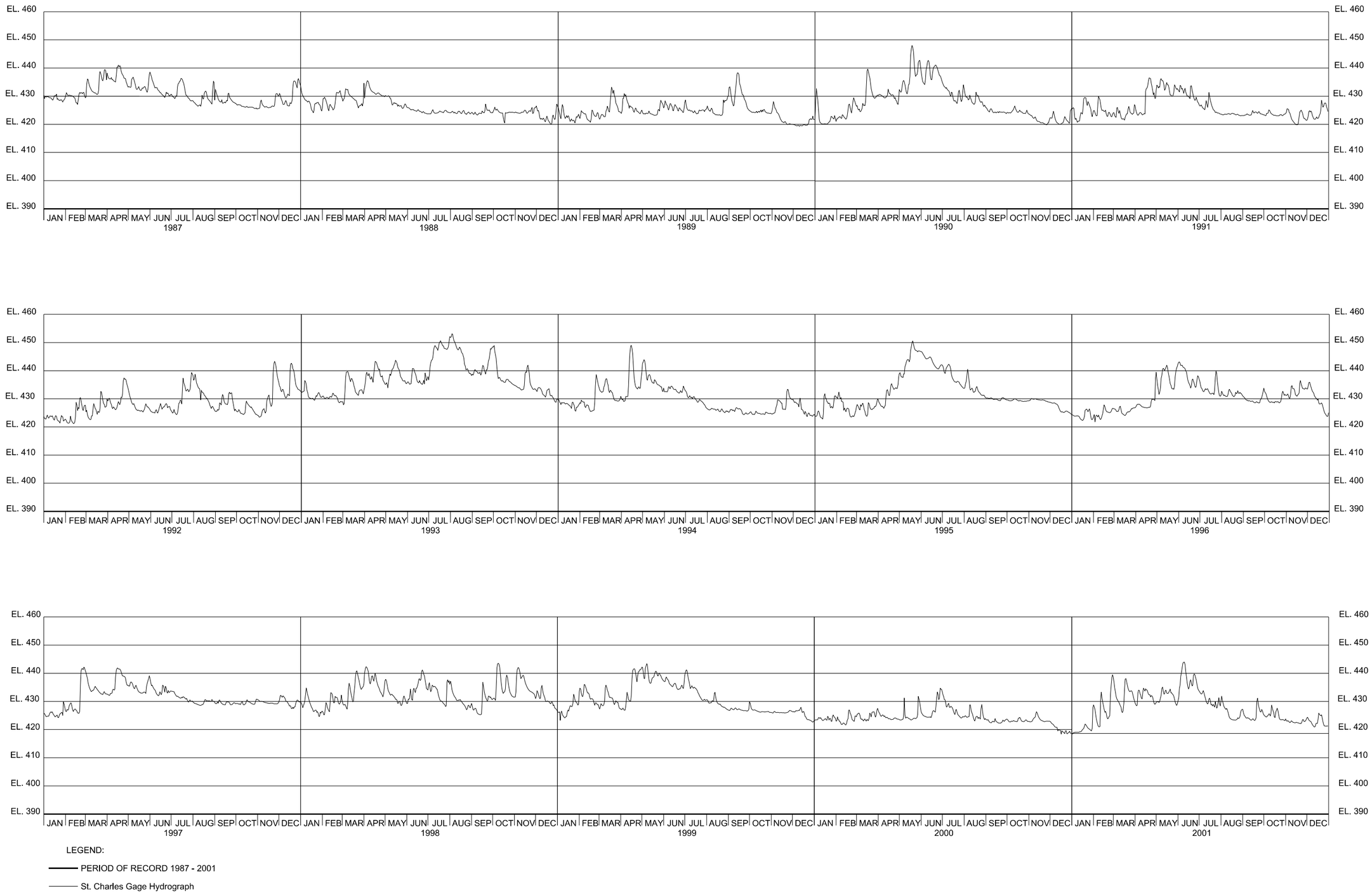

LEGEND:

PERIOD OF RECORD 1987 - 2001

St. Charles Gage Hydrograph

US Army Corps of Engineers®

MARK	DESCRIPTION	DATE	APPR.

MARK	DESCRIPTION	DATE	APPR.

U.S. ARMY CORPS OF ENGINEERS
ST. LOUIS DISTRICT
ST. LOUIS, MO 63103

DESIGNED BY: Z. RYALS
DWN BY: BJD
CKD BY: G. WALTERS
SUBMITTED BY: DONALD L. DUNCAN, P.E.
PLOT SCALE: 1:1
PLOT DATE:
DATE: JULY 2013
SOLICITATION NO.: W912P9-13-R-0720
CONTRACT NO.: CONTRACT NO.
FILE NUMBER: MOCH13
SIZE: ANSI D
FILE NAME: MOCH13_R-701.dgn

MONARCH-CHESTERFIELD LEVEE DISTRICT
RELIEF WELLS
MISSOURI RIVER
ST. LOUIS COUNTY, MISSOURI

ST. CHARLES GAGE HYDROGRAPHS
1987 - 2001

SHEET IDENTIFICATION
R-701

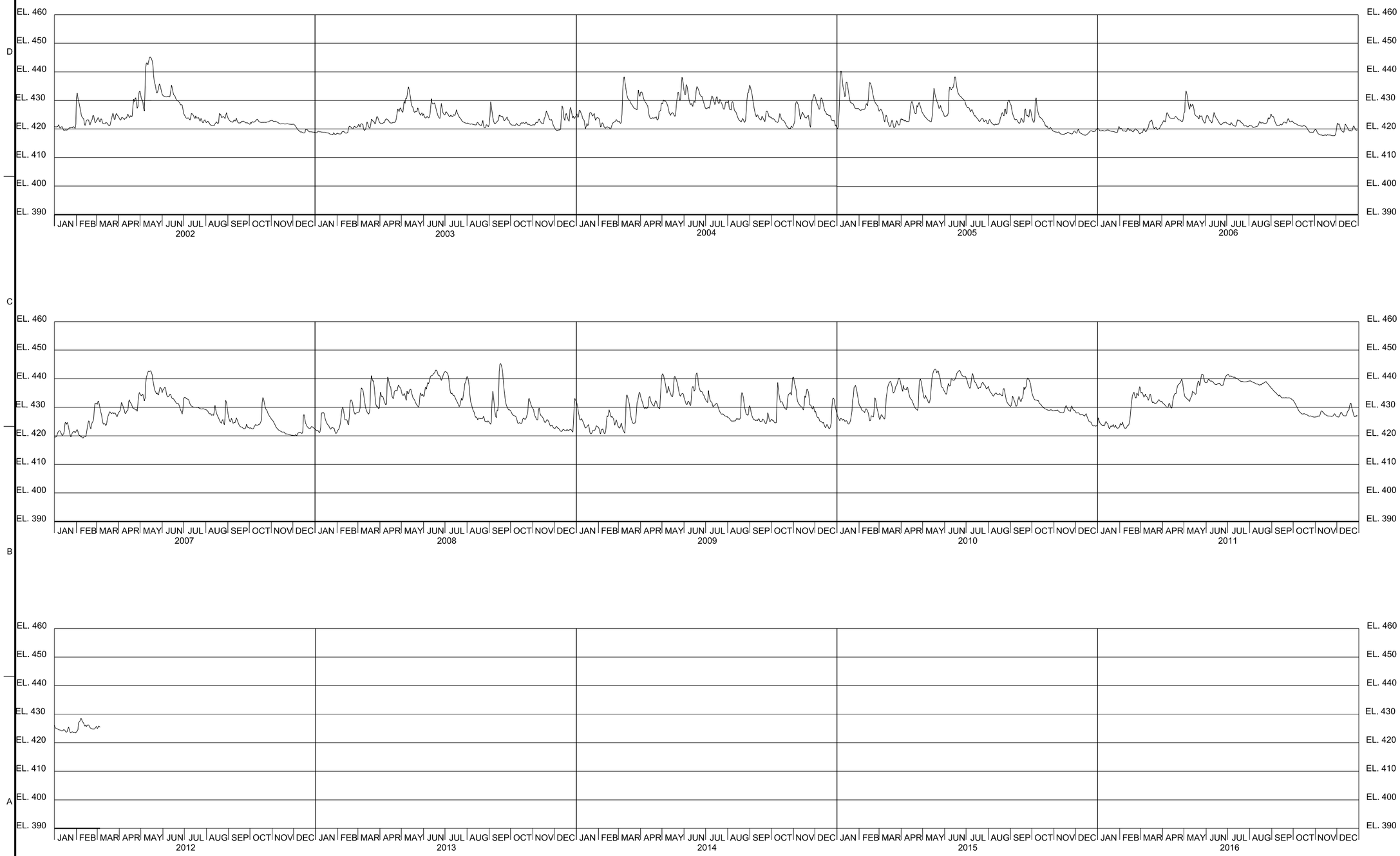

US Army Corps of Engineers®

MARK	DESCRIPTION	DATE	APPR.

MARK	DESCRIPTION	DATE	APPR.

U.S. ARMY CORPS OF ENGINEERS
ST. LOUIS DISTRICT
ST. LOUIS, MO 63103

DESIGNED BY: Z. RYALS
DWN BY: BJD
CKD BY: G. WALTERS
SUBMITTED BY: DONALD L. DUNCAN, P.E.
PLOT SCALE: 1:1
PLOT DATE: No
SIZE: ANSI D
FILE NAME: MOCH13_R-702.dgn
DATE: JULY 2013
SOLICITATION NO.: W912P9-13-R-0720
CONTRACT NO.: CONTRACT NO.
FILE NUMBER: MOCH13

MONARCH-CHESTERFIELD LEVEE DISTRICT
RELIEF WELLS
MISSOURI RIVER
ST. LOUIS COUNTY, MISSOURI
ST. CHARLES GAGE HYDROGRAPHS
2002 - PRESENT

SHEET IDENTIFICATION
R-702

auto_time