DWG. NO. M-MP-2	INDEX OF DRAWINGS
	COVER
	GENERAL
G-1	INDEX OF DRAWINGS
G-2	PROJECT LOCATION AND VICINITY MAP
	CIVIL
C-1	GENERAL SITE PLAN
C-2	EXISTING SITE & DEMOLITION PLAN
C-3.1	SITE PLAN - PARKING AREA
C-4	SITE PLAN - VISITOR CENTER BUILDING AREA
C-5	LOCATION COORDINATES
C-6.1	JOINTING AND STAKING PLAN 1
C-7	JOINTING AND STAKING PLAN 2
C-8.1	SITE GRADING
C-9.1	SITE WORK DETAILS
C-10	SITE UTILITY & STORM SEWER PLAN
C-11	STORM SEWER SCHEDULE AND UTILITY DETAILS
C-12	DRAINAGE STRUCTURES
C-13	MISCELLANEOUS DETAILS
C-14	WATERMAIN LAYOUT AND THRUST BLOCKING DETAILS
C-15	MISCELLANEOUS DETAILS
C-16	LOCK WALL GUARDRAIL PLAN
C-17	LOCK WALL GUARDRAIL ELEVATIONS
C-18	LOCK WALL GUARDRAIL ELEVATIONS
	ARCHITECTURAL
A-0	KEY PLAN, ABBREVIATIONS, DRAFTING STANDARDS
A-1	FLOOR PLAN
A-2	REFLECTED CEILING PLAN
A-3	ROOF PLAN
A-4	EXTERIOR ELEVATIONS
A-5	EXTERIOR ELEVATIONS
A-6	BUILDING SECTIONS
A-7	BUILDING SECTIONS
A-8	BUILDING SECTIONS
A-9	DETAILS
A-10	DETAILS
A-11	DETAILS
A-12	DETAILS
A-13	DETAILS
A-14	ALUMINUM FRAME ELEVATIONS
A-15	DOOR SCHEDULE AND DETAILS
A-16	DOOR DETAILS
A-17	FINISH SCHEDULE, PARTITION TYPES
A-18	ENLARGED PLAN
	STRUCTURAL
S-1	GENERAL NOTES
S-2	TYPICAL DETAILS
S-3	TYPICAL DETAILS
S-4	FOUNDATION PLAN & DETAILS
S-5	ROOF FRAMING PLAN
S-6	LOW ROOF FRAMING PLAN
S-7	FOUNDATION SECTIONS AND DETAILS
S-8	FOUNDATION SECTIONS AND DETAILS
S-9	COLUMN SCHEDULE AND DETAILS
S-10	BRACING ELEVATIONS & DETAILS
S-11	TRUSS ELEVATIONS, SECTIONS AND DETAILS
S-12	SECTIONS AND DETAILS
S-13	SECTIONS AND DETAILS
S-14	SECTIONS AND DETAILS
S-15	SECTIONS AND DETAILS
S-16	CANOPY, PLANS, SECTIONS & DETAILS
S-17	SCREEN WALL - PLAN, ELEVATION, SECTIONS & DETAILS
S-18	REVISIONS TO EXISTING EXTERIOR ENTRANCE

DWG. NO. M-MP-2	INDEX OF DRAWINGS
	MECHANICAL
M-1	HVAC LEGEND AND SYMBOLS
M-2	HVAC SCHEDULES
M-3	HVAC SCHEDULES
M-4	HVAC DUCTWORK PLAN
M-5	BUILDING DETAILS AND SECTIONS
M-6	HVAC PIPING PLAN
M-7	ENLARGED MECHANICAL ROOM PLAN
M-8	BUILDING SECTIONS
M-9	BUILDING SECTIONS
M-10	BUILDING SECTIONS
M-11	HVAC DIAGRAMS
M-12	HVAC DETAILS
M-13	HVAC SEISMIC NOTES & DETAILS
M-14	HVAC SEISMIC NOTES & DEATILS
M-15	BUILDING SECTIONS
M-16	BUILDING SECTIONS
M-17	WASTE AND VENT LINE PLAN
M-18	PLUMBING PLAN
M-19	PUMBING PARTIAL FLOOR PLANS
M-20	WASTE & VENT PIPING SCHEMATIC
M-21	WATER LINE SCHEMATIC
M-22	FIRE PROTECTION FLOOR PLAN
M-23	ROOF DRAIN PLAN
M-24	PLUMBING FIXTURE DETAILS
	ELECTRICAL
E-1	SYMBOLS, GENERAL NOTES AND ABBREVIATIONS
E-2	ADMINISTRATION - MAINTENANCE BUILDING DEMOLITION PLAN
E-3	ADMINISTRATION - MAINTENANCE VISITOR CENTER COMBINED FLOOR PLAN
E-4	SINGLE LINE DIAGRAM
E-5	PANEL SCHEDULES
E-6	POWER PLAN
E-7	MECHANICAL EQUIPMENT PLAN
E-8	LIGHTING PLAN
E-9	LIGHT FIXTURE SCHEDULE & LIGHTING PANEL SCHEDULE
E-10	LIGHTING SWITCH SCHEDULE AND OUTDOOR LIGHTING CONTROL SCHEMATIC
E-11	EQUIPMENT SCHEDULE
E-12	LIGHTNING PROTECTION PLAN
E-13	SECURITY PLAN
E-14	FIRE ALARM PLAN
E-15	FIRE ALARM SCHEDULE AND SECURITY BLOCK DIAGRAM
E-16	TELECOMMUNICATIONS/DATA COMMUNICATION PLAN
E-17	CCTV WIRING AND LIGHTING PANEL SCHEDULE
E-18	SECURITY SYSTEM DETAILS / DUCT DETAILS
E-19	VISITOR CENTER SITE PLAN - SHEET 1
E-20	VISITOR CENTER SITE PLAN - SHEET 2
E-21	SYSTEM DETAIL
E-22	SITE UTILITY PLAN

DWG. NO. M-L26(R)	REFERENCE DRAWINGS
	CIVIL
2/26	SITE PLAN
2/27	LANDSIDE PAVEMENT PLAN
2/28	LANDSIDE PAVEMENT JOINT LAYOUT
2/29	UPSTREAM, DOWNSTREAM, AND POWER BLDG. AREA PAVEMENT PLAN
2/30	CONCRETE PAVEMENT SECTIONS AND DETAILS
	STRUCTURAL
90/55.1	FOUNDATION PLAN AND DETAILS
90/56.1	ROOF FRAMING PLANS
90/57.2	FOUNDATION DETAILS
90/59	STEEL BRACING DETAILS
90/60.1	STEEL SECTIONS AND DETAILS
90/64	EXTERIOR ENTRANCE DETAILS
	BUILDINGS
90/67	FLOOR PLAN
90/68	ROOF PLAN & DETAILS
90/69	LANDSIDE & DOWNSTREAM ELEVATIONS
90/70	RIVERSIDE & UPSTREAM ELEVATIONS
90/71	BUILDING SECTIONS
90/72	WALL SECTIONS
90/73	INTERIOR ELEVATIONS WINDOW FRAME ELEVATIONS
90/74	REFLECTED CEILING PLAN
90/75.1	ROOM FINISH SCHEDULE, DOOR SCHEDULE
90/76	PARTITION TYPES MISC. DETAILS
90/77	DOOR AND WINDOW DETAILS
	ELECTRICAL
90/83	SYMBOLS, GENERAL NOTES, ABBREVIATIONS AND LEGEND
90/84	ADMINISTRATION & MAINTENANCE BUILDING POWER PLAN
90/85	ADMINISTRATION & MAINTENANCE BUILDING LIGHTING PLAN
90/86	ADMINISTRATION & MAINTENANCE BUILDING SYSTEM PLAN
90/96	SITE PLAN

AS BUILT

SYMBOL	DESCRIPTION	DATE	APPROVED
1	CHANGED TO AGREE WITH AMEND. NO. 0002	11/96	R.L.J.

REVISIONS

U.S. ARMY ENGINEER DISTRICT, ST. LOUIS
CORPS OF ENGINEERS
ST. LOUIS, MISSOURI

DESIGNED BY: J. R. HELFRICH
DRAWN BY: J. R. HELFRICH
CHECKED BY: D. L. ATCHLEY
DATE: NOVEMBER, 1996

SUBMITTED: DARYL L. ATCHLEY, DESIGN ENGINEER
SUBMITTED: THOMAS J. QUIGLEY, CHIEF, STRUCT./ARCH. SECTION
APPROVED: JOBBY R. HUGHEY, CHIEF, DESIGN BRANCH

UPPER MISSISSIPPI RIVER BASIN
MISSISSIPPI RIVER - ALTON, ILLINOIS
MELVIN PRICE LOCKS AND DAM
VISITOR CENTER
GENERAL

INDEX OF DRAWINGS

SIZE: D | DWG. CODE: DACW 43 | DRAWING NO. M-MP-2/G-1.1

DESIGN FILE: n:\melprice\visitor\mpvcmg01.dgn | PLOT DATE: 22-JAN-1997 10:27
PLOT SCALE: 1:12 | SOL. NO. DACW43-97-B-0204 | FILE NO.

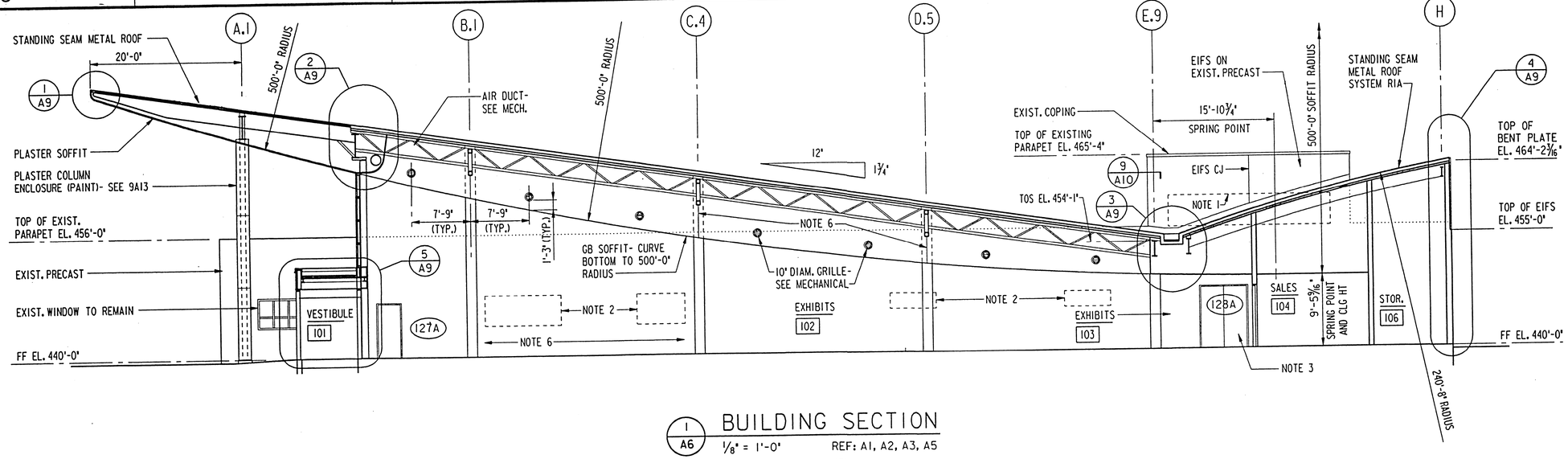

1 A6 BUILDING SECTION

1/8" = 1'-0" REF: A1, A2, A3, A5

12"0 5' 10' 15'

BUILDING SECTION NOTES

1. REMOVE WINDOW- INFILL OPENING WITH PARTITION TYPE P25- SET FACE OF PARTITION INFILL FLUSH WITH EXTERIOR FACE OF PRECAST- PAINT SIDE FACING MAINTENANCE SHOP WITH EPOXY PAINT.
2. REMOVE WINDOW- SEE SHEET A1.
3. CUT OPENING IN PRECAST PANEL FOR WIDER DOOR OPENING AT DOOR '128B'- SEE DOOR DETAILS AND STRUCTURAL DRAWINGS.
4. GYPSUM BOARD SOFFIT - SEE 3A10.
5. ACOUSTICAL WALL PANELS- 8'-0" WIDE X 4'-0" HIGH- SEE SPECS.
6. PROVIDE VERTICAL CONTROL JOINT IN GYPSUM BOARD (INCLUDING SOFFIT)- LOCATE JOINTS AT COLUMN LINES AT NORTH AND SOUTH WALL OF EXHIBITS 102.
7. BRACE TOP OF STUD PARTITION SIMILAR TO 2A10.

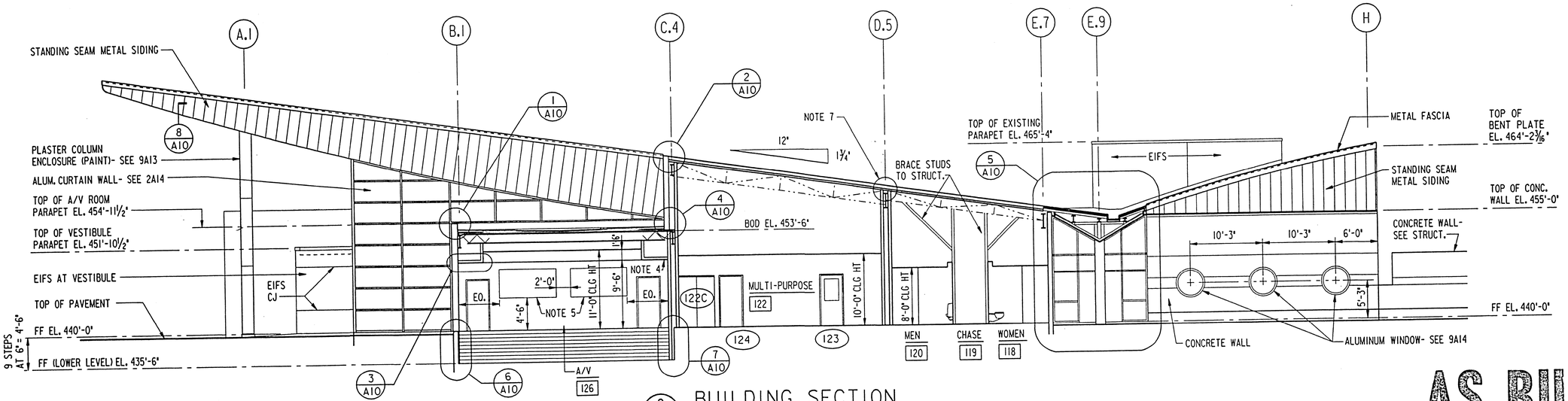

2 A6 BUILDING SECTION

1/8" = 1'-0" REF: A1, A2, A3, A4, A5, A17

AS BUILT

SYMBOL	DESCRIPTION	DATE	APPROVED

REVISIONS

U.S. ARMY ENGINEER DISTRICT, ST. LOUIS
CORPS OF ENGINEERS
ST. LOUIS, MISSOURI

DESIGNED BY: DJ. GUENTHER
DRAWN BY: D. N. ATCHLEY
CHECKED BY: D. N. ATCHLEY
DATE: NOVEMBER, 1996

SUBMITTED: DARYL N. ATCHLEY, ARCHITECT
SUBMITTED: THOMAS GUIGLEY, PE, CHIEF, STRUCTURAL/ARCHITECTURAL SECTION
APPROVED: BOBBY R. HUGHEY, CHIEF, DESIGN BRANCH

UPPER MISSISSIPPI RIVER BASIN
MISSISSIPPI RIVER - ALTON, ILLINOIS
MELVIN PRICE LOCKS AND DAM
VISITOR CENTER
ARCHITECTURAL
BUILDING SECTIONS

SIZE: D | DWG. CODE: DACW 43 | DRAWING NO.: M-MP-2/A-6

DESIGN FILE: n:\melprice\visitor\mpvcasel.dgn | PLOT DATE: 15-OCT-1996 08:54

PLOT SCALE: 8:1 | SOL. NO. DACW43-97-B-0204 | FILE NO.

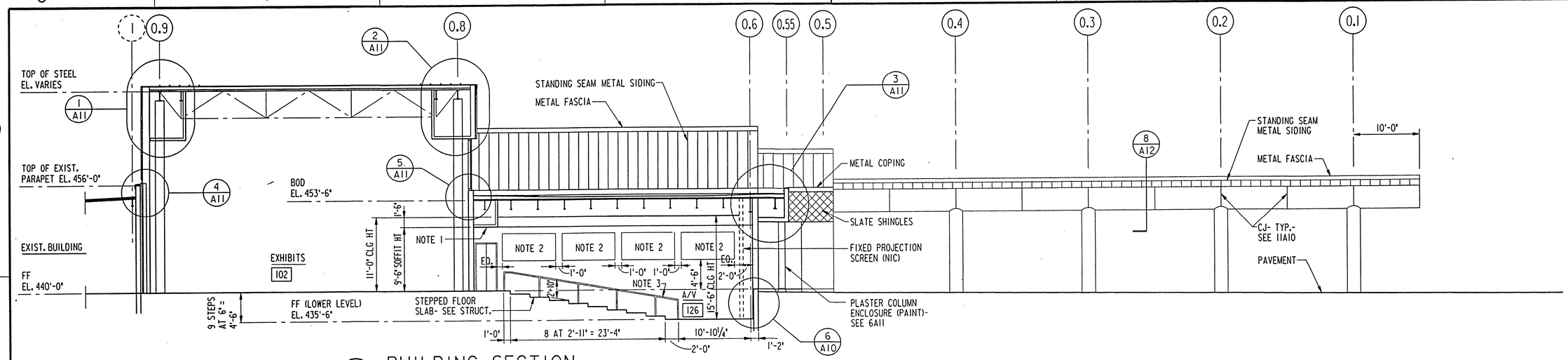

1/A7 BUILDING SECTION

1/8" = 1'-0" REF: A1, A2, A3, A4, A7, A17, A18

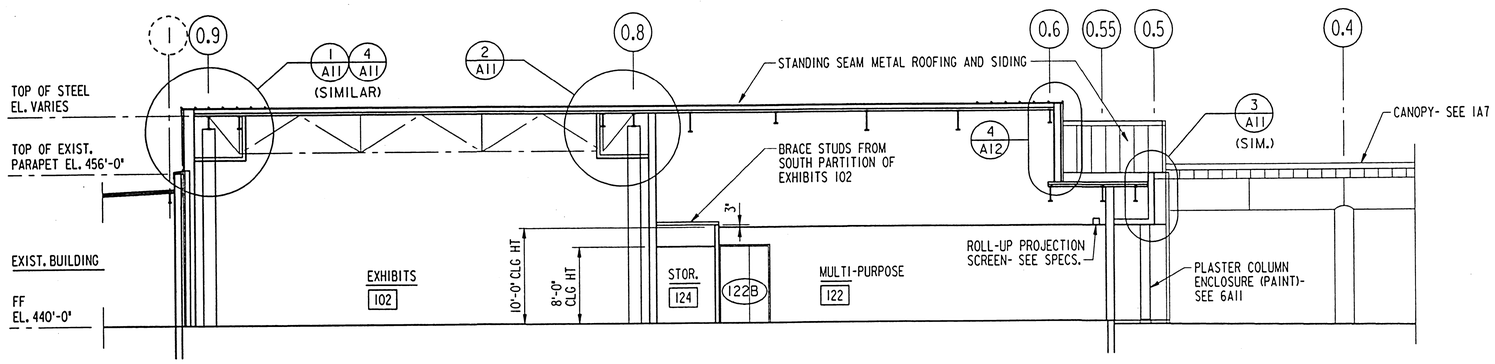

2/A7 BUILDING SECTION

1/8" = 1'-0" REF: A1, A2, A3, A4

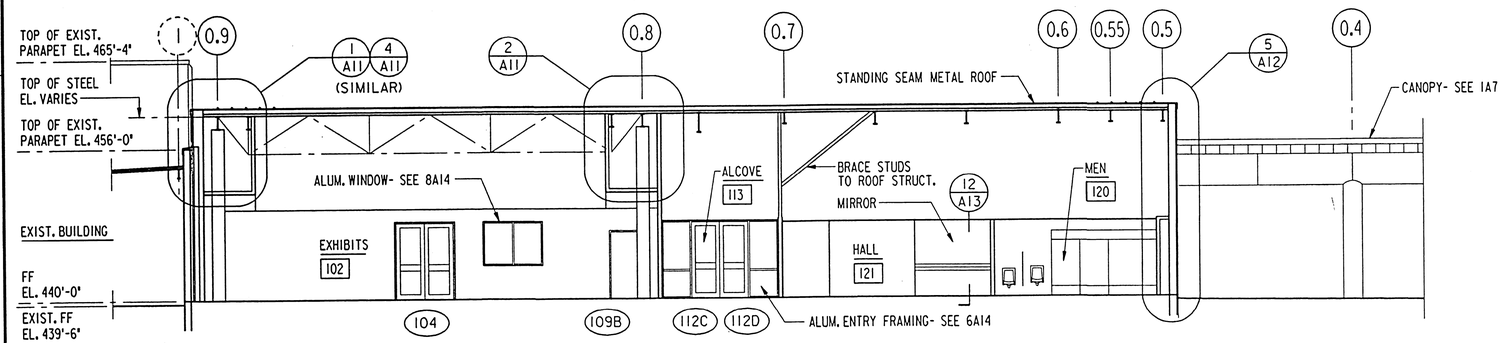

3/A7 BUILDING SECTION

1/8" = 1'-0" REF: A1, A2, A3, A4

BUILDING SECTION NOTES

1. GYPSUM BOARD SOFFIT- SEE 3A10.
2. ACOUSTICAL WALL PANELS- SEE SPECS. (OPPOSITE WALL SIMILAR).
3. HANDRAIL- SEE NOTE 7, SHEET A18 (OPPOSITE WALL SIMILAR).

AS BUILT

SYMBOL	DESCRIPTION	DATE	APPROVED

REVISIONS

U.S. ARMY ENGINEER DISTRICT, ST. LOUIS
CORPS OF ENGINEERS
ST. LOUIS, MISSOURI

DESIGNED BY: DJ. GUENTHER
DRAWN BY: D. N. ATCHLEY
CHECKED BY: D. N. ATCHLEY
DATE: NOVEMBER, 1996

UPPER MISSISSIPPI RIVER BASIN
MISSISSIPPI RIVER - ALTON, ILLINOIS
MELVIN PRICE LOCKS AND DAM
VISITOR CENTER
ARCHITECTURAL
BUILDING SECTIONS

SUBMITTED: DARYL N. ATCHLEY, ARCHITECT
SUBMITTED: THOMAS QUIGLEY, PE, CHIEF, STRUCTURAL/ARCHITECTURAL SECTION
APPROVED: BOBBY R. HUGHEY, CHIEF, DESIGN BRANCH

SIZE: D | DWG. CODE: DACW 43 | DRAWING NO. M-MP-2/A-7

DESIGN FILE: n:\melprice\visitor\mpvcase2.dgn | PLOT DATE: 15-OCT-1996 08:55
PLOT SCALE: 8:1 | SOL. NO. DACW43-97-B-0204 | FILE NO.

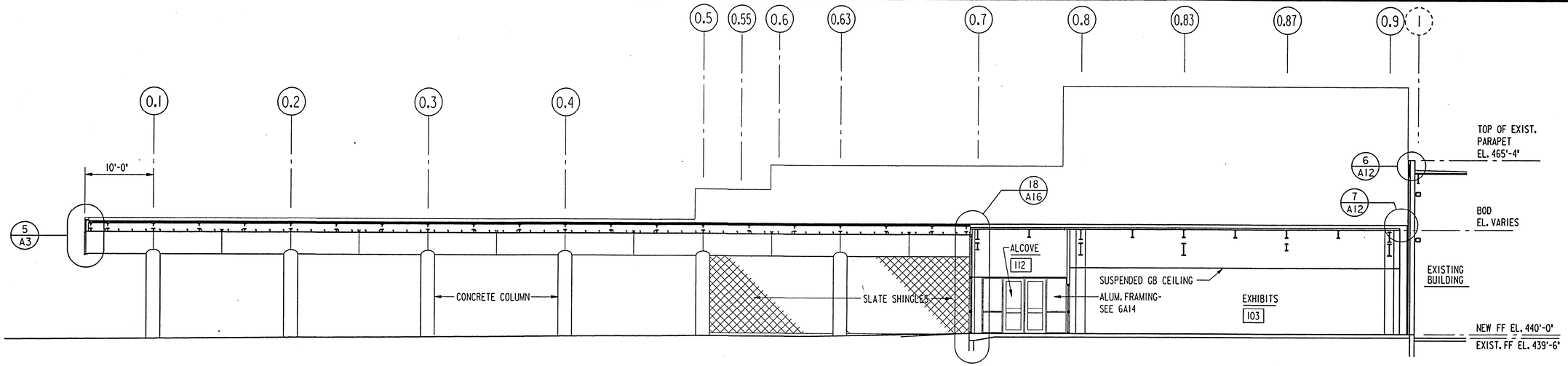

1 A8 BUILDING SECTION

1/8" = 1'-0" REF: A1, A2, A3, A4

12"0 5' 10' 15'

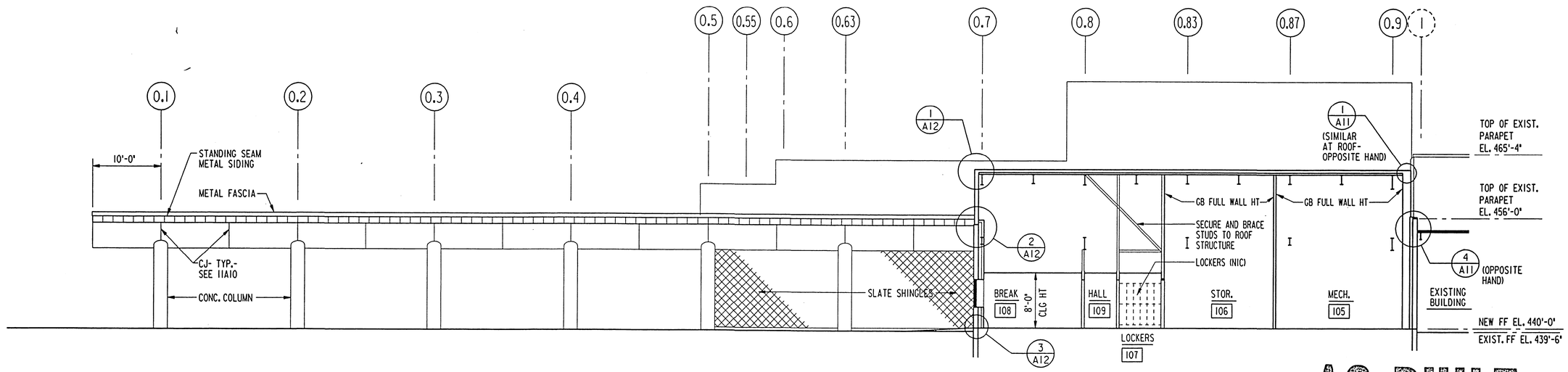

2 A8 BUILDING SECTION

1/8" = 1'-0" REF: A1, A2, A3, A4

AS BUILT

SYMBOL	DESCRIPTION	DATE	APPROVED

REVISIONS

U.S. ARMY ENGINEER DISTRICT, ST. LOUIS
CORPS OF ENGINEERS
ST. LOUIS, MISSOURI

DESIGNED BY: DJ. GUENTHER
DRAWN BY: D. N. ATCHLEY
CHECKED BY: D. N. ATCHLEY
DATE: NOVEMBER, 1996

SUBMITTED: DARYL N. ATCHLEY, ARCHITECT

SUBMITTED: THOMAS GUIGLEY, PE, CHIEF, STRUCTURAL/ARCHITECTURAL SECTION

APPROVED: BOBBY R. HUGHEY, CHIEF, DESIGN BRANCH

UPPER MISSISSIPPI RIVER BASIN
MISSISSIPPI RIVER - ALTON, ILLINOIS
MELVIN PRICE LOCKS AND DAM
VISITOR CENTER

ARCHITECTURAL
BUILDING SECTIONS

SIZE	DWG. CODE	DRAWING NO.
D	DACW 43	M-MP-2/A-8

DESIGN FILE: n:\melprice\visitor\mpvcase3.dgn | PLOT DATE: 15-OCT-1996 08:56

PLOT SCALE: 8:1 | SOL. NO. DACW43-97-B-0204 | FILE NO.

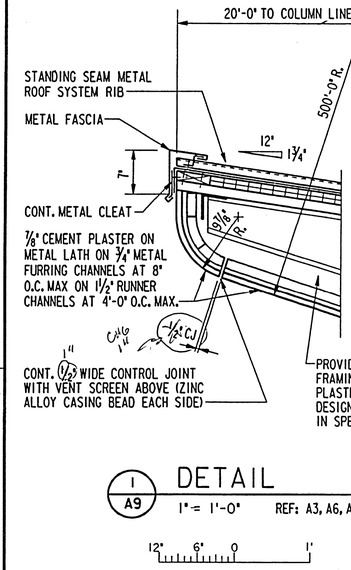

1 A9 DETAIL
1" = 1'-0" REF: A3, A6, A9

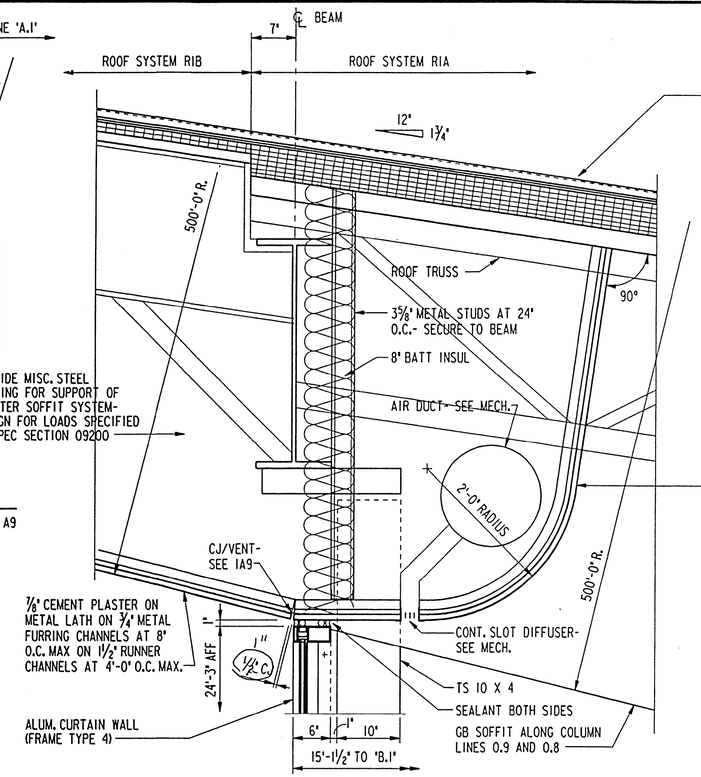

2 A9 DETAIL
1" = 1'-0" REF: A3, A6

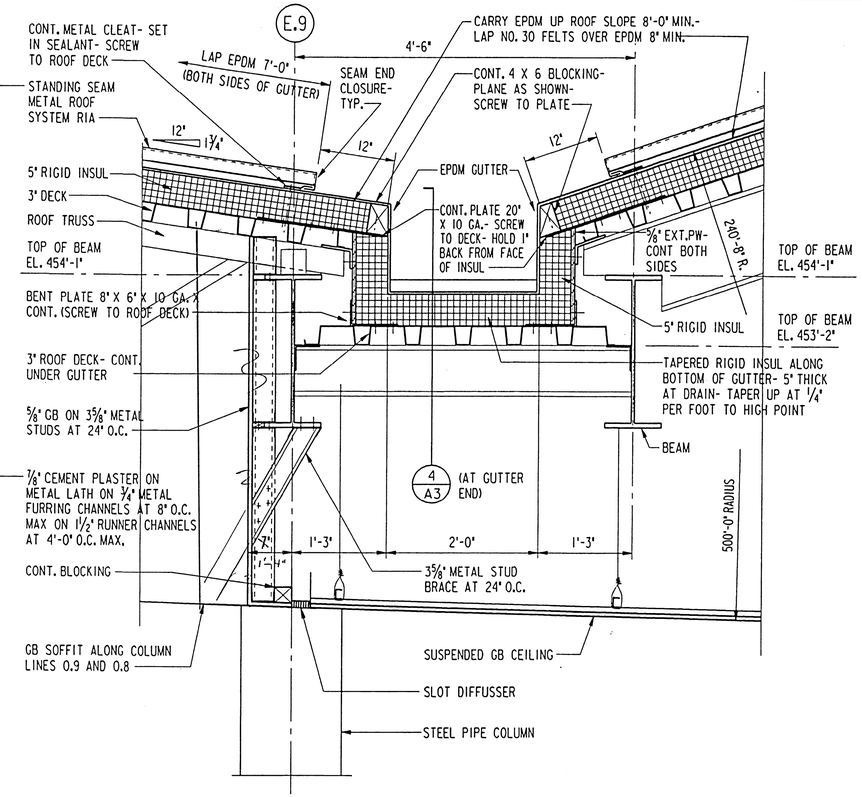

3 A9 DETAIL
1" = 1'-0" REF: A3, A6

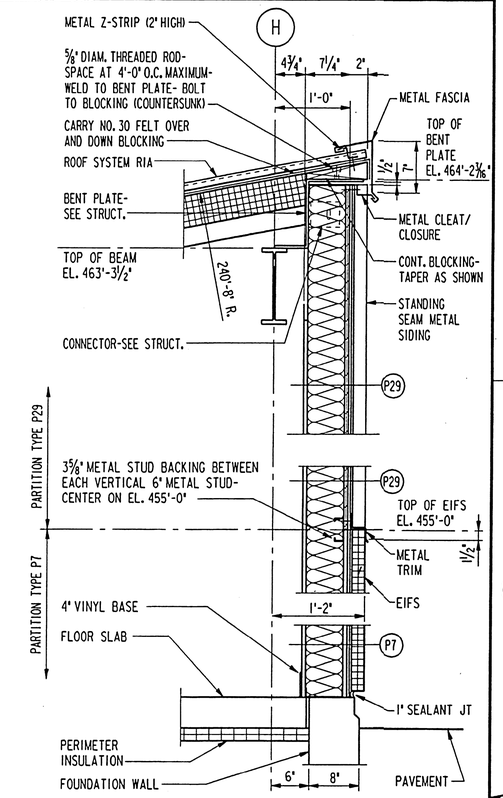

4 A9 DETAIL
1" = 1'-0" REF: A3, A6

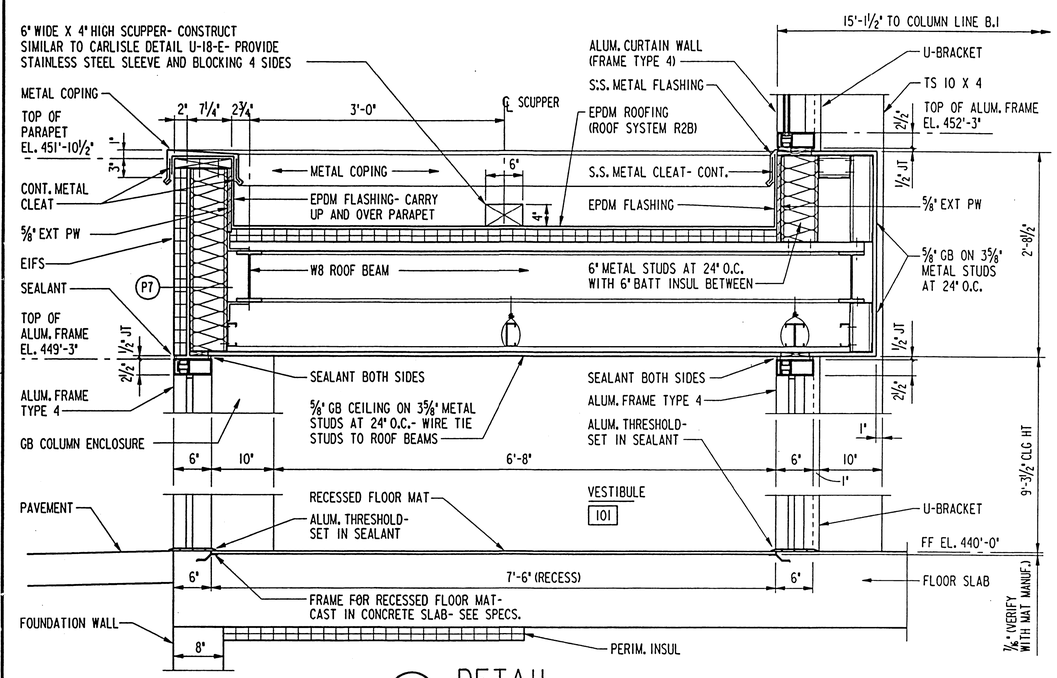

5 A9 DETAIL
1" = 1'-0" REF: A1, A3, A6, A9, A14, A15, A17

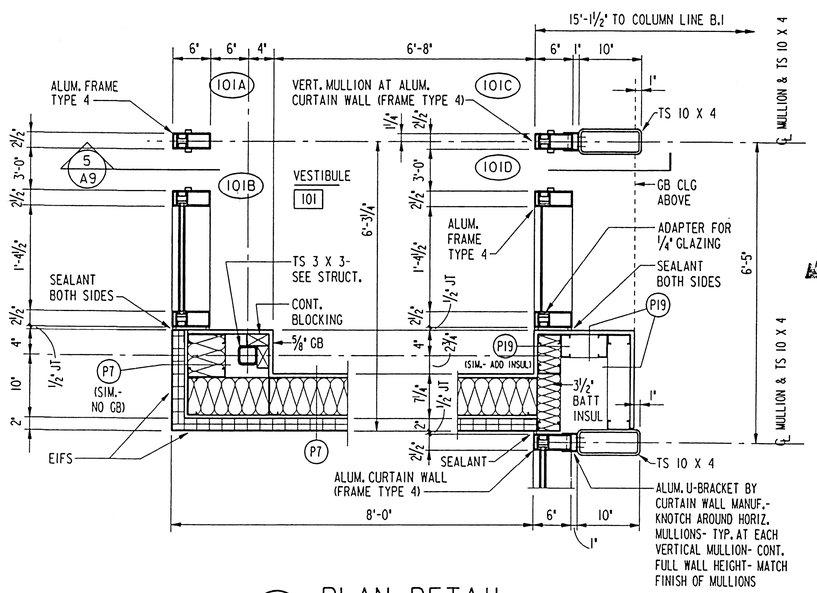

6 A9 PLAN DETAIL
1" = 1'-0" REF: A1, A14, A15

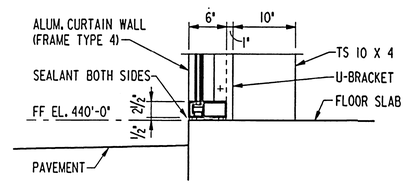

7 A9 DETAIL
1" = 1'-0" REF: A14

AS BUILT

SYMBOL	DESCRIPTION	DATE	APPROVED

REVISIONS

U.S. ARMY ENGINEER DISTRICT, ST. LOUIS
CORPS OF ENGINEERS
ST. LOUIS, MISSOURI

DESIGNED BY: DJ. GUENTHER
DRAWN BY: D. N. ATCHLEY
CHECKED BY: D. N. ATCHLEY
DATE: NOVEMBER, 1996

UPPER MISSISSIPPI RIVER BASIN
MISSISSIPPI RIVER - ALTON, ILLINOIS
MELVIN PRICE LOCKS AND DAM
VISITOR CENTER
ARCHITECTURAL
DETAILS

SUBMITTED: DARYL N. ATCHLEY, ARCHITECT
SUBMITTED: THOMAS GUIGLEY, PE, CHIEF, STRUCTURAL/ARCHITECTURAL SECTION
APPROVED: BOBBY R. HUGHEY, CHIEF, DESIGN BRANCH

SIZE D | DWG. CODE DACW 43 | DRAWING NO. M-MP-2/A-9

DESIGN FILE: n:\melprice\visitor\mpvcaedl.dgn | PLOT DATE: 15-OCT-1996 08:58
PLOT SCALE: 8:1 | SOL. NO. DACW43-97-B-0204 | FILE NO.

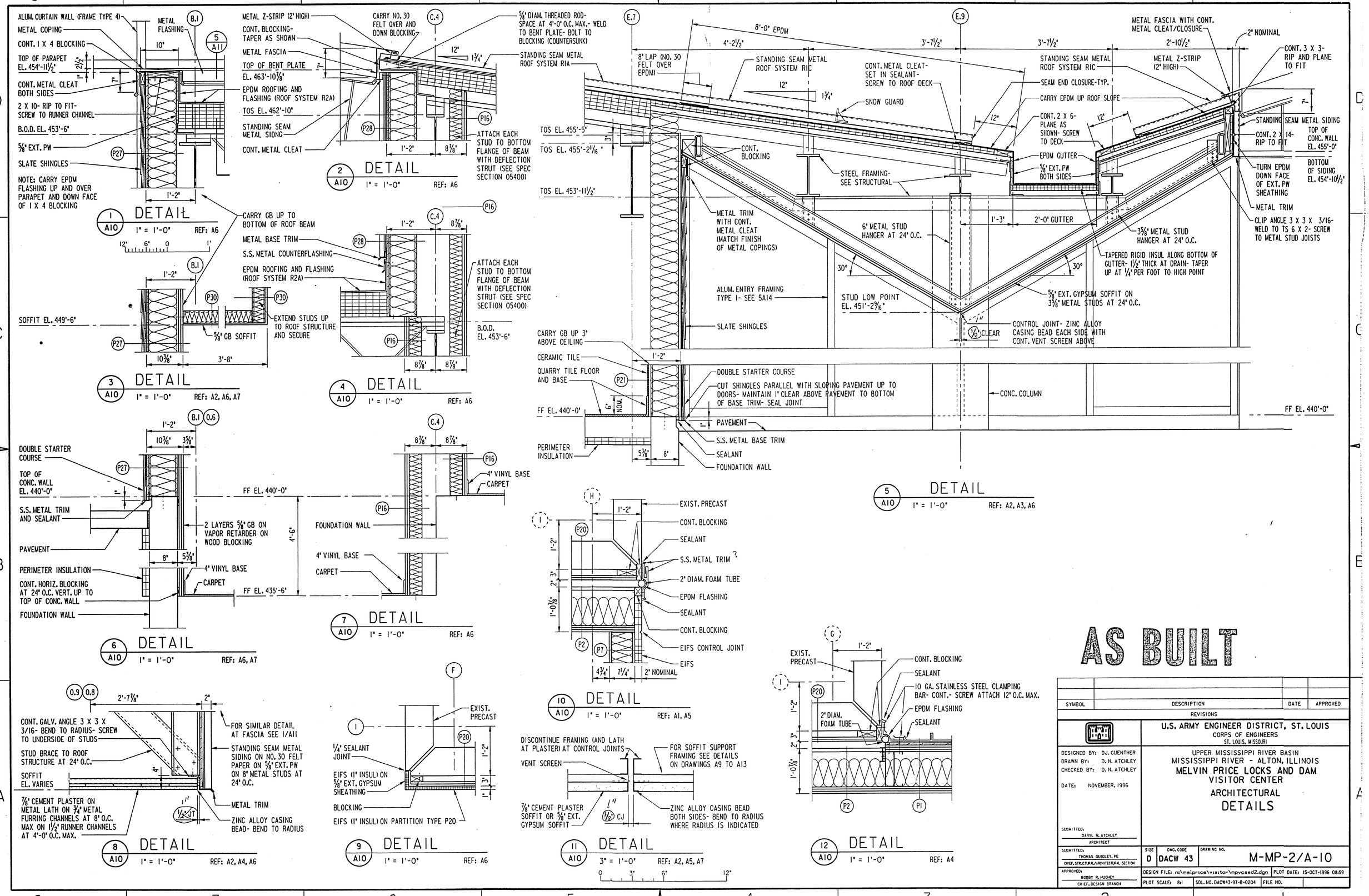
ALUM. CURTAIN WALL (FRAME TYPE 4)
METAL COPING
CONT. 1 X 4 BLOCKING
TOP OF PARAPET EL. 454'-11½"
CONT. METAL CLEAT BOTH SIDES
2 X 10- RIP TO FIT- SCREW TO RUNNER CHANNEL
B.O.D. EL. 453'-6"
⅝" EXT. PW
SLATE SHINGLES
NOTE: CARRY EPDM FLASHING UP AND OVER PARAPET AND DOWN FACE OF 1 X 4 BLOCKING
METAL FLASHING
1 A10 DETAIL 1" = 1'-0" REF: A6
METAL Z-STRIP (2" HIGH)
CONT. BLOCKING- TAPER AS SHOWN
METAL FASCIA
TOP OF BENT PLATE EL. 463'-10⅞"
EPDM ROOFING AND FLASHING (ROOF SYSTEM R2A)
TOS EL. 462'-10"
STANDING SEAM METAL SIDNG
CONT. METAL CLEAT
CARRY NO. 30 FELT OVER AND DOWN BLOCKING
⅝" DIAM. THREADED ROD- SPACE AT 4'-0" O.C. MAX.- WELD TO BENT PLATE- BOLT TO BLOCKING (COUNTERSUNK)
STANDING SEAM METAL ROOF SYSTEM RIA
ATTACH EACH STUD TO BOTTOM FLANGE OF BEAM WITH DEFLECTION STRUT (SEE SPEC SECTION 05400)
2 A10 DETAIL 1" = 1'-0" REF: A6
CARRY GB UP TO BOTTOM OF ROOF BEAM
METAL BASE TRIM
S.S. METAL COUNTERFLASHING
EPDM ROOFING AND FLASHING (ROOF SYSTEM R2A)
EXTEND STUDS UP TO ROOF STRUCTURE AND SECURE
SOFFIT EL. 449'-6"
⅝" GB SOFFIT
3 A10 DETAIL 1" = 1'-0" REF: A2, A6, A7
ATTACH EACH STUD TO BOTTOM FLANGE OF BEAM WITH DEFLECTION STRUT (SEE SPEC SECTION 05400)
B.O.D. EL. 453'-6"
4 A10 DETAIL 1" = 1'-0" REF: A6
8'-0" EPDM
8" LAP (NO. 30 FELT OVER EPDM)
STANDING SEAM METAL ROOF SYSTEM RIC
CONT. METAL CLEAT- SET IN SEALANT- SCREW TO ROOF DECK
SNOW GUARD
STANDING SEAM METAL ROOF SYSTEM RIC
SEAM END CLOSURE-TYP.
CARRY EPDM UP ROOF SLOPE
METAL FASCIA WITH CONT. METAL CLEAT/CLOSURE
METAL Z-STRIP (2" HIGH)
2" NOMINAL
CONT. 3 X 3- RIP AND PLANE TO FIT
CONT. 2 X 6- PLANE AS SHOWN- SCREW TO DECK
EPDM GUTTER
⅝" EXT. PW BOTH SIDES
STANDING SEAM METAL SIDING
CONT. 2 X 14- RIP TO FIT
TOP OF CONC. WALL EL. 455'-0"
BOTTOM OF SIDING EL. 454'-10½"
TURN EPDM DOWN FACE OF EXT. PW SHEATHING
METAL TRIM
CLIP ANGLE 3 X 3 X 3/16- WELD TO TS 6 X 2- SCREW TO METAL STUD JOISTS
TOS EL. 455'-5"
TOS EL. 455'-2 11/16"
TOS EL. 453'-11½"
CONT. BLOCKING
STEEL FRAMING- SEE STRUCTURAL
METAL TRIM WITH CONT. METAL CLEAT (MATCH FINISH OF METAL COPINGS)
6" METAL STUD HANGER AT 24" O.C.
1'-3"
2'-0" GUTTER
3⅝" METAL STUD HANGER AT 24" O.C.
TAPERED RIGID INSUL ALONG BOTTOM OF GUTTER- 1½" THICK AT DRAIN- TAPER UP AT ¼" PER FOOT TO HIGH POINT
ALUM. ENTRY FRAMING TYPE I- SEE 5A14
STUD LOW POINT EL. 451'-2 9/16"
⅝" EXT. GYPSUM SOFFIT ON 3⅝" METAL STUDS AT 24" O.C.
CONTROL JOINT- ZINC ALLOY CASING BEAD EACH SIDE WITH CONT. VENT SCREEN ABOVE
½" CLEAR
SLATE SHINGLES
CARRY GB UP 3" ABOVE CEILING
CERAMIC TILE
QUARRY TILE FLOOR AND BASE
DOUBLE STARTER COURSE
CUT SHINGLES PARALLEL WITH SLOPING PAVEMENT UP TO DOORS- MAINTAIN 1" CLEAR ABOVE PAVEMENT TO BOTTOM OF BASE TRIM- SEAL JOINT
CONC. COLUMN
FF EL. 440'-0"
PAVEMENT
S.S. METAL BASE TRIM
SEALANT
FOUNDATION WALL
PERIMETER INSULATION
5 A10 DETAIL 1" = 1'-0" REF: A2, A3, A6
DOUBLE STARTER COURSE
TOP OF CONC. WALL EL. 440'-0"
S.S. METAL TRIM AND SEALANT
PAVEMENT
PERIMETER INSULATION
CONT. HORIZ. BLOCKING AT 24" O.C. VERT. UP TO TOP OF CONC. WALL
FOUNDATION WALL
2 LAYERS ⅝" GB ON VAPOR RETARDER ON WOOD BLOCKING
4" VINYL BASE
CARPET
FF EL. 435'-6"
6 A10 DETAIL 1" = 1'-0" REF: A6, A7
4" VINYL BASE
CARPET
7 A10 DETAIL 1" = 1'-0" REF: A6
EXIST. PRECAST
CONT. BLOCKING
SEALANT
S.S. METAL TRIM
2" DIAM. FOAM TUBE
EPDM FLASHING
EIFS CONTROL JOINT
EIFS
2" NOMINAL
10 A10 DETAIL 1" = 1'-0" REF: A1, A5
CONT. GALV. ANGLE 3 X 3 X 3/16- BEND TO RADIUS- SCREW TO UNDERSIDE OF STUDS
STUD BRACE TO ROOF STRUCTURE AT 24" O.C.
SOFFIT EL. VARIES
⅞" CEMENT PLASTER ON METAL LATH ON ¾" METAL FURRING CHANNELS AT 8" O.C. MAX ON 1½" RUNNER CHANNELS AT 4'-0" O.C. MAX.
FOR SIMILAR DETAIL AT FASCIA SEE 1/A11
STANDING SEAM METAL SIDING ON NO. 30 FELT PAPER ON ⅝" EXT. PW ON 8" METAL STUDS AT 24" O.C.
METAL TRIM
ZINC ALLOY CASING BEAD- BEND TO RADIUS
8 A10 DETAIL 1" = 1'-0" REF: A2, A4, A6
EXIST. PRECAST
¼" SEALANT JOINT
EIFS (1" INSUL) ON ⅝" EXT. GYPSUM SHEATHING
BLOCKING
EIFS (1" INSUL) ON PARTITION TYPE P20
9 A10 DETAIL 1" = 1'-0" REF: A6
DISCONTINUE FRAMING (AND LATH AT PLASTER) AT CONTROL JOINTS
VENT SCREEN
FOR SOFFIT SUPPORT FRAMING SEE DETAILS ON DRAWINGS A9 TO A13
⅞" CEMENT PLASTER SOFFIT OR ⅝" EXT. GYPSUM SOFFIT
½" CJ
ZINC ALLOY CASING BEAD BOTH SIDES- BEND TO RADIUS WHERE RADIUS IS INDICATED
11 A10 DETAIL 3" = 1'-0" REF: A2, A5, A7
EXIST. PRECAST
CONT. BLOCKING
SEALANT
10 GA. STAINLESS STEEL CLAMPING BAR- CONT.- SCREW ATTACH 12" O.C. MAX.
EPDM FLASHING
SEALANT
2" DIAM. FOAM TUBE
12 A10 DETAIL 1" = 1'-0" REF: A4
AS BUILT
SYMBOL | DESCRIPTION | DATE | APPROVED
REVISIONS
U.S. ARMY ENGINEER DISTRICT, ST. LOUIS
CORPS OF ENGINEERS
ST. LOUIS, MISSOURI
DESIGNED BY: DJ. GUENTHER
DRAWN BY: D. N. ATCHLEY
CHECKED BY: D. N. ATCHLEY
DATE: NOVEMBER, 1996
UPPER MISSISSIPPI RIVER BASIN
MISSISSIPPI RIVER - ALTON, ILLINOIS
MELVIN PRICE LOCKS AND DAM
VISITOR CENTER
ARCHITECTURAL
DETAILS
SUBMITTED: DARYL N. ATCHLEY ARCHITECT
SUBMITTED: THOMAS QUIGLEY, PE CHIEF, STRUCTURAL/ARCHITECTURAL SECTION
APPROVED: BOBBY R. HUGHEY CHIEF, DESIGN BRANCH
SIZE D | DWG. CODE DACW 43 | DRAWING NO. M-MP-2/A-10
DESIGN FILE: n:\melprice\visitor\mpvcaed2.dgn | PLOT DATE: 15-OCT-1996 08:59
PLOT SCALE: 8:1 | SOL. NO. DACW43-97-B-0204 | FILE NO.

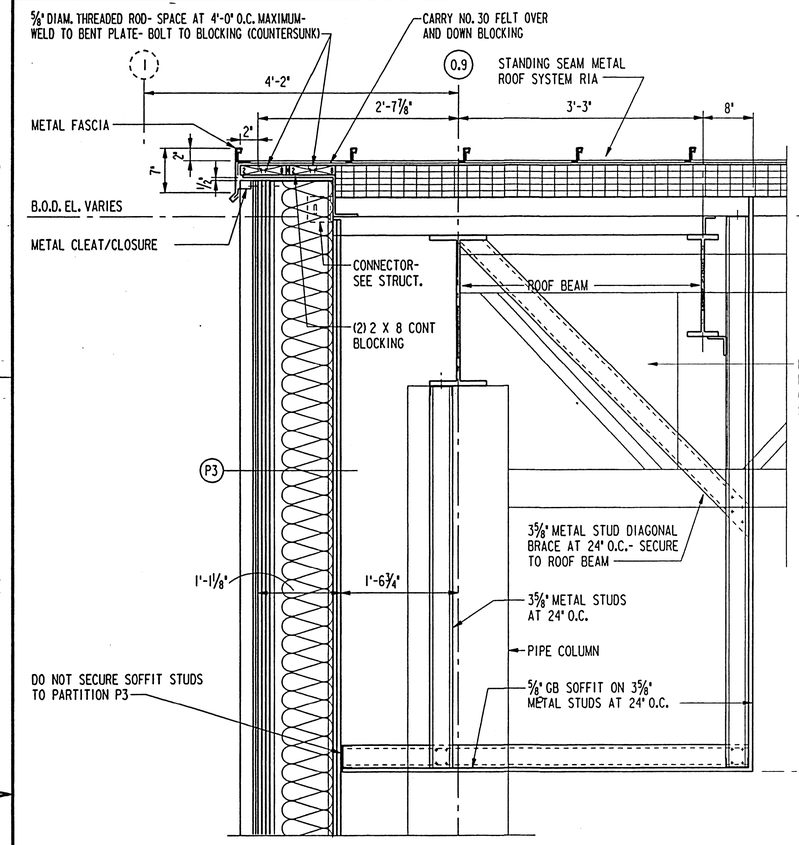

1/A11 DETAIL
1" = 1'-0" REF: A7, A8, A10, A13

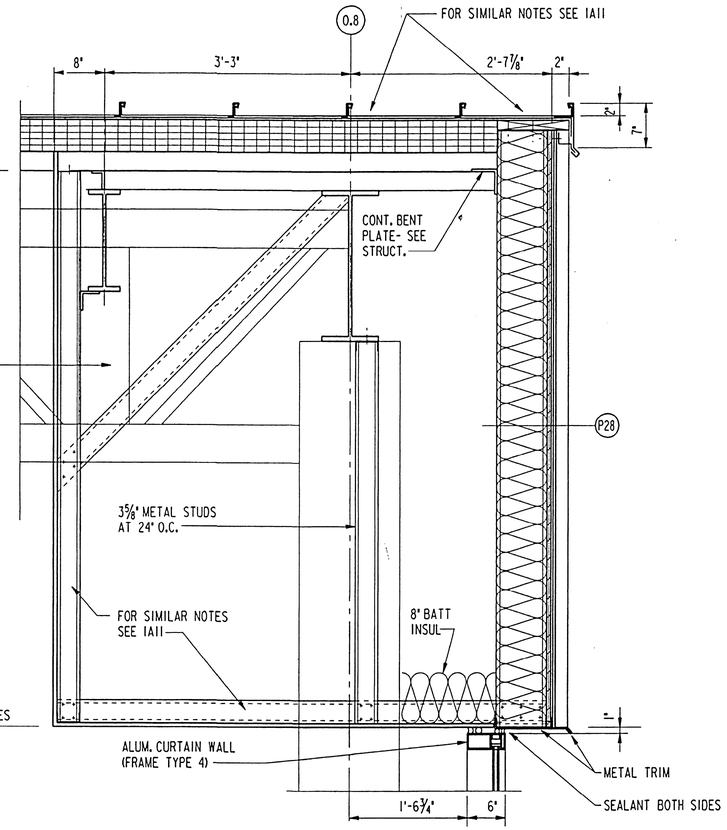

2/A11 DETAIL
1" = 1'-0" REF: A7

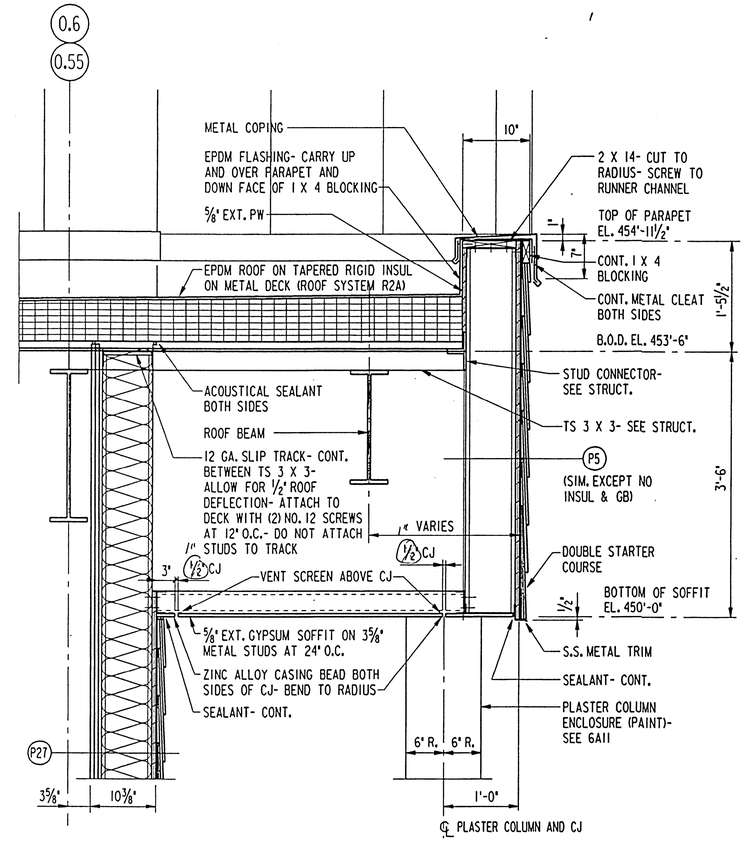

3/A11 DETAIL
1" = 1'-0" REF: A7

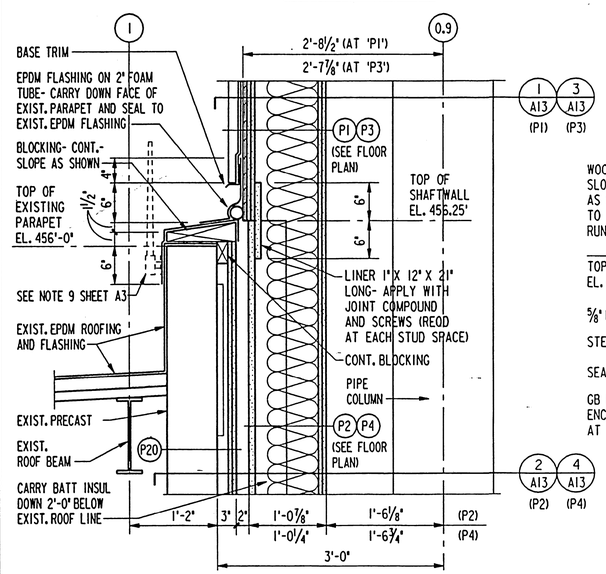

4/A11 DETAIL
1" = 1'-0" REF: A3, A7, A8

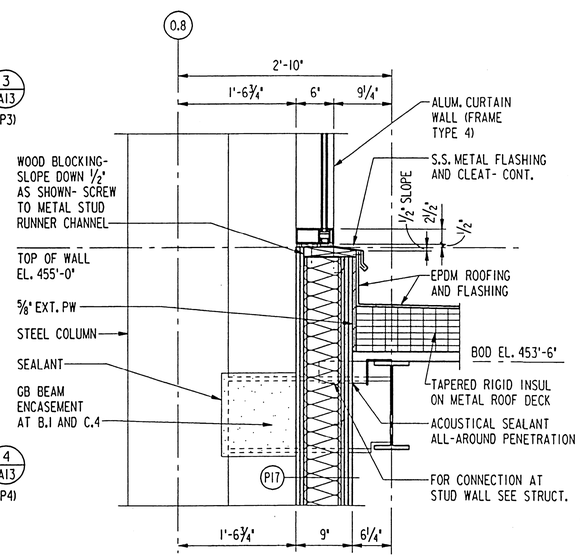

5/A11 DETAIL
1" = 1'-0" REF: A7, A10

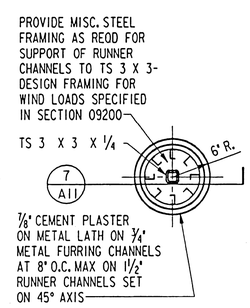

6/A11 DETAIL
1" = 1'-0" REF: A4, A5, A7, A11, A18

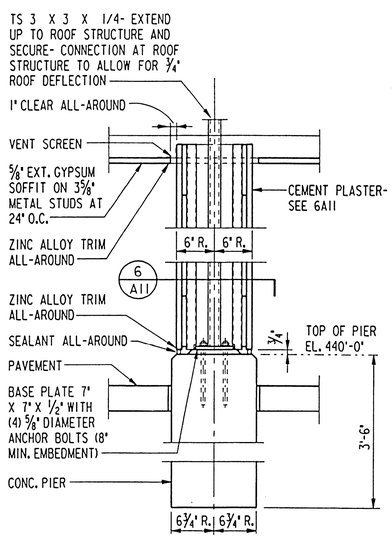

7/A11 DETAIL
1" = 1'-0" REF: A11

AS BUILT

SYMBOL	DESCRIPTION	DATE	APPROVED
	REVISIONS		

U.S. ARMY ENGINEER DISTRICT, ST. LOUIS
CORPS OF ENGINEERS
ST. LOUIS, MISSOURI

DESIGNED BY: DJ. GUENTHER
DRAWN BY: D. N. ATCHLEY
CHECKED BY: D. N. ATCHLEY
DATE: NOVEMBER, 1996

UPPER MISSISSIPPI RIVER BASIN
MISSISSIPPI RIVER - ALTON, ILLINOIS
MELVIN PRICE LOCKS AND DAM
VISITOR CENTER
ARCHITECTURAL
DETAILS

SUBMITTED: DARYL N. ATCHLEY, ARCHITECT
SUBMITTED: THOMAS QUIGLEY, PE, CHIEF, STRUCTURAL/ARCHITECTURAL SECTION
APPROVED: BOBBY R. HUGHEY, CHIEF, DESIGN BRANCH

SIZE: D | DWG. CODE: DACW 43 | DRAWING NO. M-MP-2/A-11
DESIGN FILE: n:\melprice\visitor\mpvcaed3.dgn | PLOT DATE: 15-OCT-1996 09:00
PLOT SCALE: 8:1 | SOL. NO. DACW43-97-B-0204 | FILE NO.

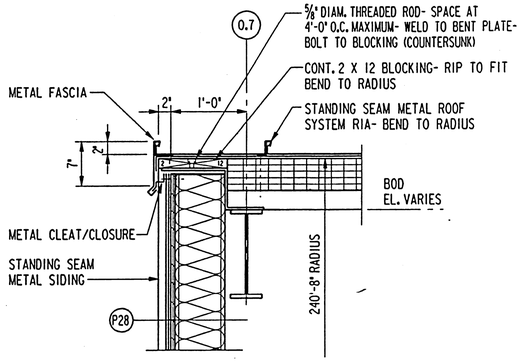

1 / A12 DETAIL
1" = 1'-0" REF: A8

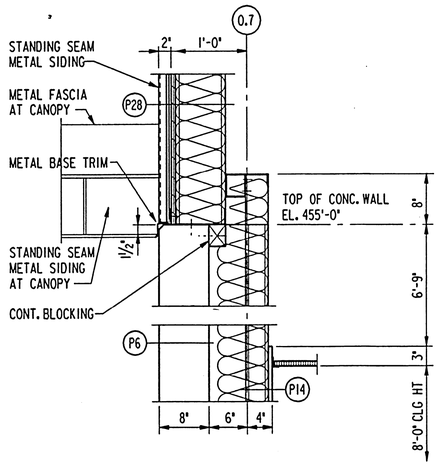

2 / A12 DETAIL
1" = 1'-0" REF: A8

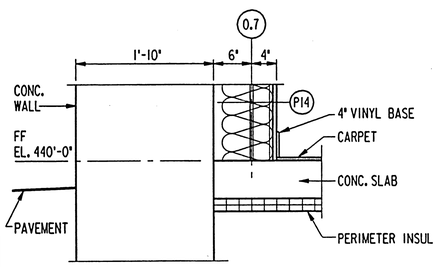

3 / A12 DETAIL
1" = 1'-0" REF: A8

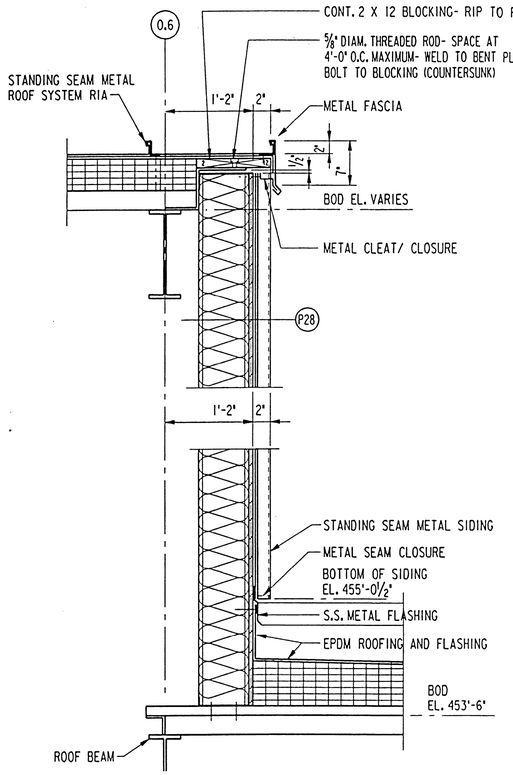

4 / A12 DETAIL
1" = 1'-0" REF: A7

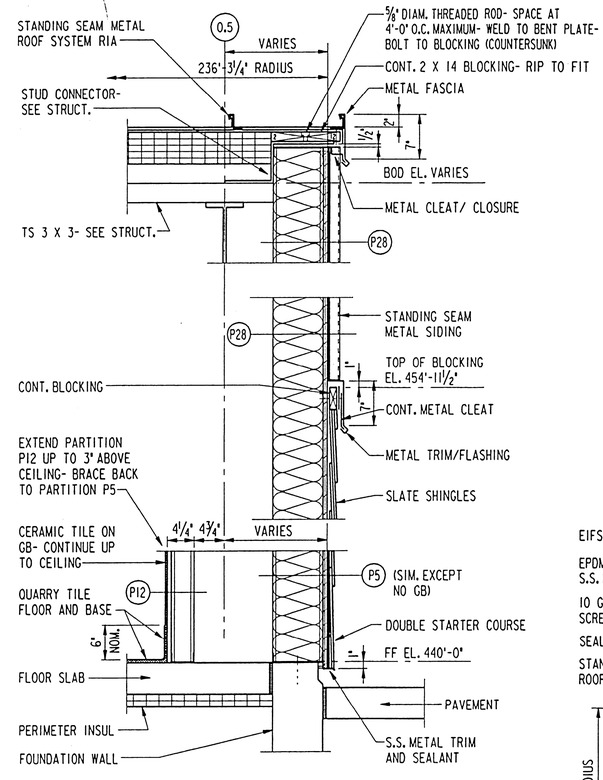

5 / A12 DETAIL
1" = 1'-0" REF: A7

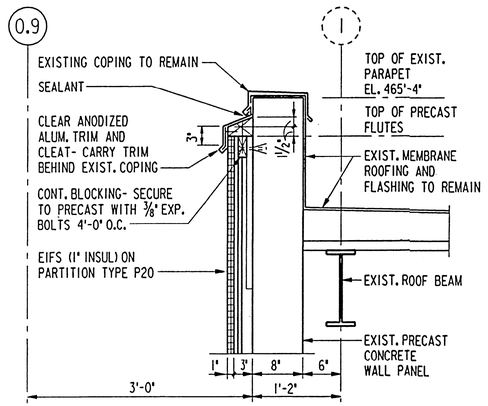

6 / A12 DETAIL
1" = 1'-0" REF: A8

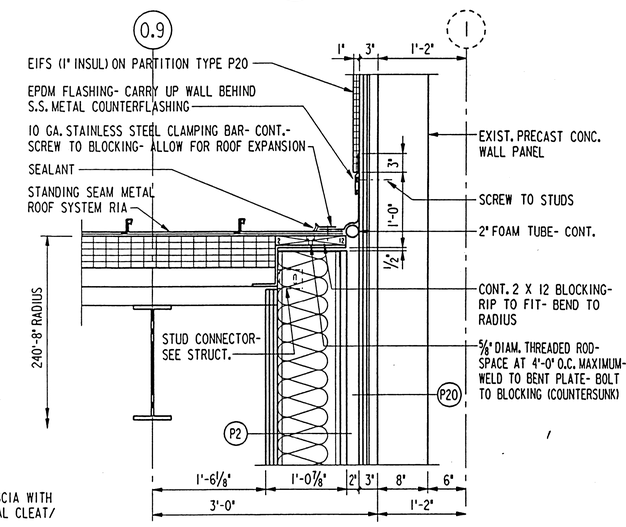

7 / A12 DETAIL
1" = 1'-0" REF: A8

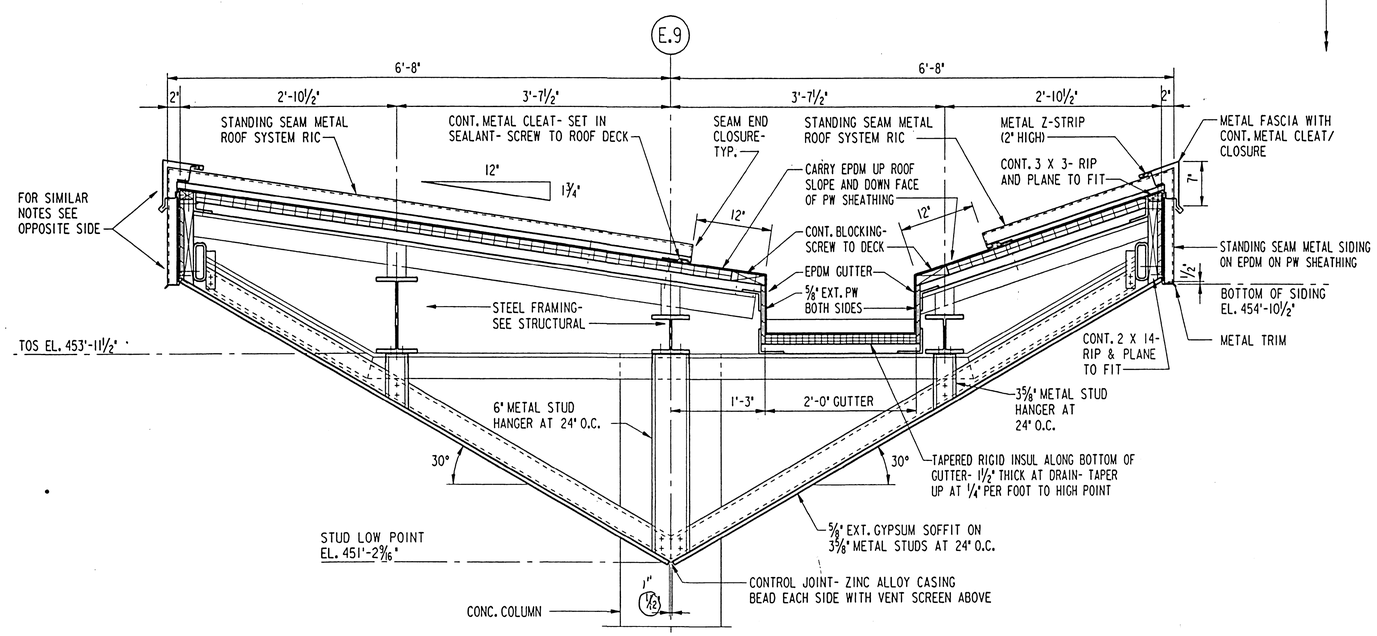

8 / A12 DETAIL
1" = 1'-0" REF: A2, A3, A5, A7

AS BUILT

SYMBOL	DESCRIPTION	DATE	APPROVED

REVISIONS

U.S. ARMY ENGINEER DISTRICT, ST. LOUIS
CORPS OF ENGINEERS
ST. LOUIS, MISSOURI

DESIGNED BY: DJ. GUENTHER
DRAWN BY: D. N. ATCHLEY
CHECKED BY: D. N. ATCHLEY
DATE: NOVEMBER, 1996

SUBMITTED: DARYL N. ATCHLEY, ARCHITECT
SUBMITTED: THOMAS QUIGLEY, PE, CHIEF, STRUCTURAL/ARCHITECTURAL SECTION
APPROVED: BOBBY R. HUGHEY, CHIEF, DESIGN BRANCH

UPPER MISSISSIPPI RIVER BASIN
MISSISSIPPI RIVER - ALTON, ILLINOIS
MELVIN PRICE LOCKS AND DAM
VISITOR CENTER
ARCHITECTURAL
DETAILS

SIZE	DWG. CODE	DRAWING NO.
D	DACW 43	M-MP-2/A-12

DESIGN FILE: n:\melprice\visitor\mpvcaad4.dgn | PLOT DATE: 15-OCT-1996 09:01
PLOT SCALE: 8:1 | SOL. NO. DACW43-97-B-0204 | FILE NO.

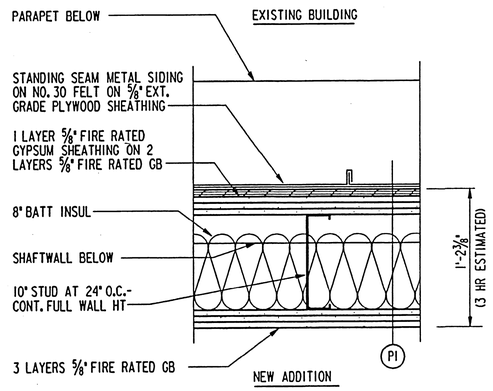

3 HR WALL ABOVE EXISTING PARAPET

1 / A13 SCALE: 1 1/2" = 1'-0" REF: A11

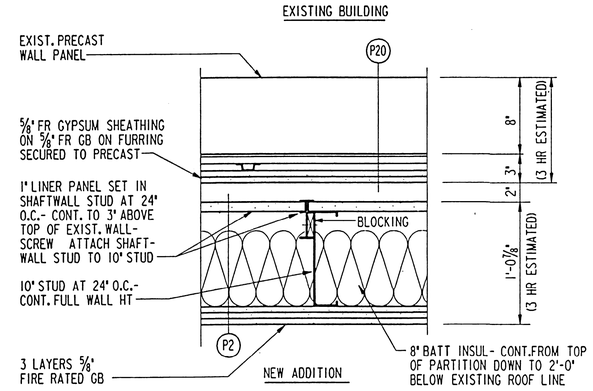

3 HR WALL BELOW EXISTING PARAPET

2 / A13 SCALE: 1 1/2" = 1'-0" REF: A11, A17

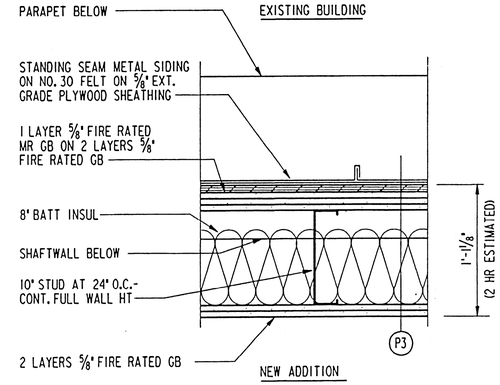

2 HR WALL ABOVE EXISTING PARAPET

3 / A13 SCALE: 1 1/2" = 1'-0" REF: A11

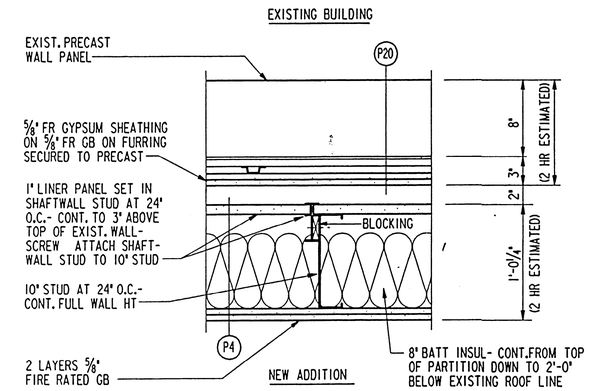

2 HR WALL BELOW EXISTING PARAPET

4 / A13 SCALE: 1 1/2" = 1'-0" REF: A11, A17

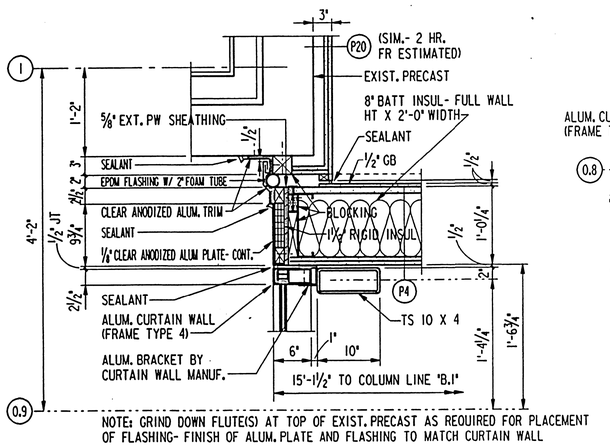

DETAIL

5 / A13 1" = 1'-0" REF: A1, A13, A14

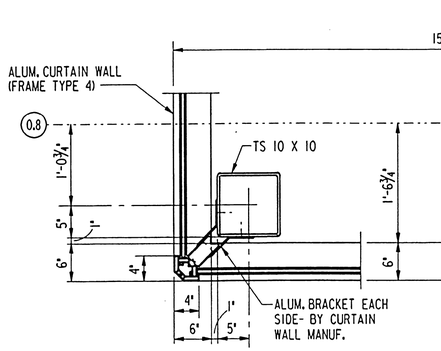

CORNER DETAIL

6 / A13 1" = 1'-0" REF: A1, A14

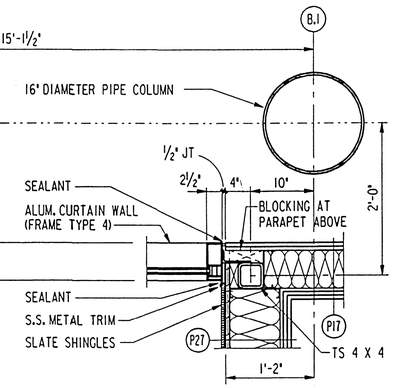

DETAIL

7 / A13 1" = 1'-0" REF: A1, A14, A18

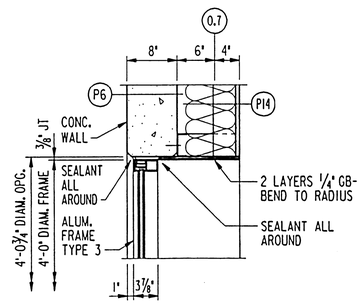

WINDOW DETAIL

8 / A13 1" = 1'-0" REF: A14

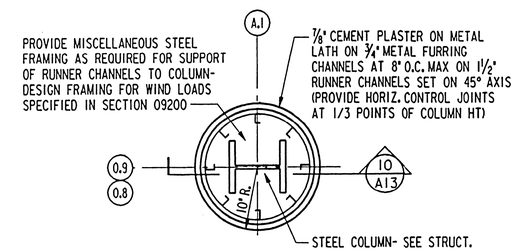

DETAIL

9 / A13 1" = 1'-0" REF: A1, A4, A6

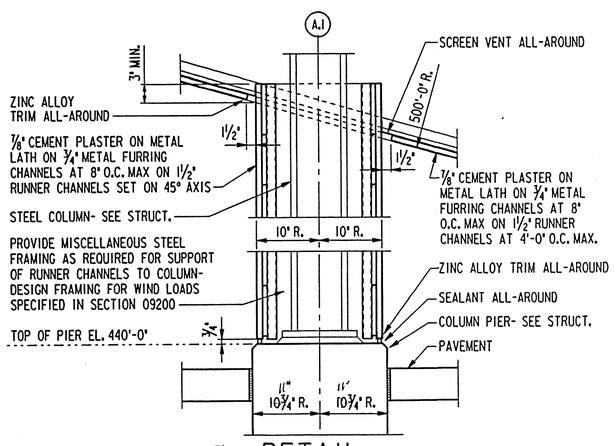

DETAIL

10 / A13 1" = 1'-0" REF: A13

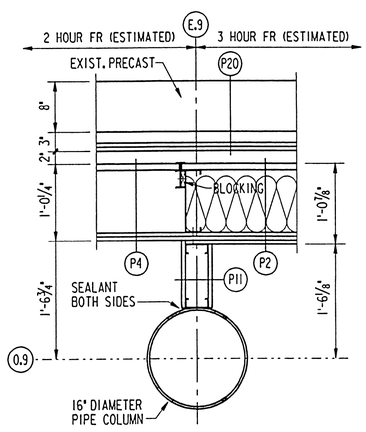

DETAIL

11 / A13 1" = 1'-0" REF: A1

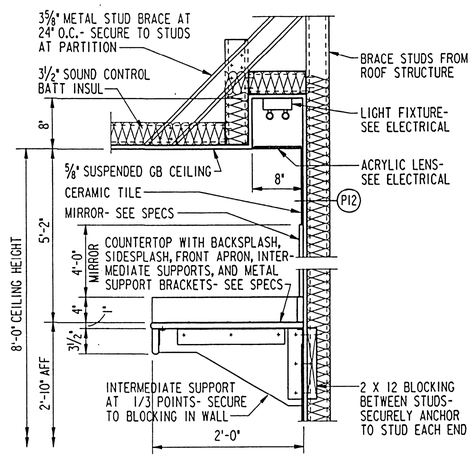

DETAIL

12 / A13 1" = 1'-0" REF: A2, A7, A18

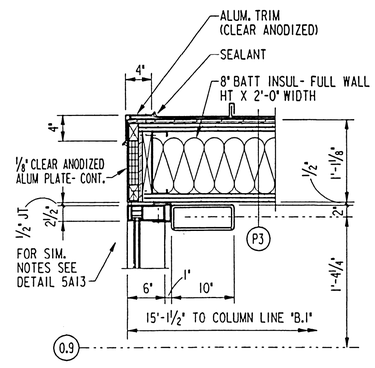

DETAIL

13 / A13 1" = 1'-0" REF: A14

AS BUILT

SYMBOL	DESCRIPTION	DATE	APPROVED
	REVISIONS		

U.S. ARMY ENGINEER DISTRICT, ST. LOUIS
CORPS OF ENGINEERS
ST. LOUIS, MISSOURI

DESIGNED BY: DJ. GUENTHER
DRAWN BY: D. N. ATCHLEY
CHECKED BY: D. N. ATCHLEY
DATE: NOVEMBER, 1996

UPPER MISSISSIPPI RIVER BASIN
MISSISSIPPI RIVER - ALTON, ILLINOIS
MELVIN PRICE LOCKS AND DAM
VISITOR CENTER
ARCHITECTURAL
DETAILS

SUBMITTED: DARYL N. ATCHLEY, ARCHITECT
SUBMITTED: THOMAS QUIGLEY, PE, CHIEF, STRUCTURAL/ARCHITECTURAL SECTION
APPROVED: BOBBY R. HUCHEY, CHIEF, DESIGN BRANCH

SIZE: D | DWG. CODE: DACW 43 | DRAWING NO. M-MP-2/A-13
DESIGN FILE: n:\melprice\visitor\mpvcaed5.dgn | PLOT DATE: 15-OCT-1996 09:02
PLOT SCALE: 8:1 | SOL. NO. DACW43-97-B-0204 | FILE NO.

GENERAL LEGEND

- SINGLE POLE SWITCH
- TWO POLE SWITCH
- THREE WAY SWITCH
- FOUR WAY SWITCH
- FRACTIONAL H.P. MANUAL STARTER
- WEATHERPROOF SWITCH
- MOMENTARY CONTACT SINGLE POLE DOUBLE THROW SWITCH
- TYPE OF SWITCH (1, 2 POLE, 3-WAY, 4-WAY)
- SWITCH LEG, INDICATES WHICH FIXTURE IS TO BE CONTROLLED
- SPECIAL SWITCH FUNCTION: K - KEYED SWITCH
- SIMPLEX RECEPTACLE
- EXPLOSION PROOF SIMPLEX RECEPTACLE
- DUPLEX RECEPTACLE
- WEATHERPROOF DUPLEX RECEPTACLE
- DUPLEX RECEPTACLE W/GROUND FAULT INTERRUPTOR
- QUADRUPLEX RECEPTACLE
- SPECIAL PURPOSE OUTLET (IDENTIFIED ON PLANS)
- PLUG
- JUNCTION BOX (LINE GOES TO BOX)
- EXPLOSION PROOF JUNCTION BOX (LINE GOES TO BOX)
- GROUND ROD
- GROUND - CHASSIS, BUS, OR AT EARTH POTENTIAL
- MOTOR
- EXPLOSION PROOF MOTOR
- CIRCUIT BREAKER
- FUSE
- LIGHT FIXTURE. * = TYPE
- EXPLOSION PROOF LIGHT FIXTURE * = TYPE
- FLUORESCENT LIGHT FIXTURE. * = TYPE
- EMERGENCY FLUORESCENT LIGHT FIXTURE. * = TYPE
- CONDUIT (EXPOSED)
- CONDUIT (CONCEALED)
- NEUTRAL, G, HOT — * 12 THWN UNLESS OTHERWISE SPECIFIED. LONG AND SHORT HASH LINES DENOTE NUMBER OF CURRENT CARRYING WIRES. G = SEPARATE GROUND WIRE.
- LIGHTING PANEL
- POWER PANEL
- LIGHTNING ARRESTOR
- THERMOSTAT
- REMOTE CONTROL STATION. (3-DEVICE STA. SHOWN)
- SOLVENOID VALVE
- MOTORIZED VALVE
- CAPACITOR
- AMMETER
- VOLTMETER
- GENERATOR
- AMMETER SWITCH
- VOLTMETER SWITCH
- COMBINATION CIRCUIT BREAKER/STARTER WITH OVERLOAD PROTECTION. * = NEMA SIZE NO.
- DISCONNECT SWITCH. * = AMPERAGE RATING.
- WIREMOLD, PLUGMOLD, OR EQUAL
- POWER POLE
- THERMAL OVERLOAD PROTECTION
- EXIT SIGN, SHADED AREA DENOTES VIEWED FACE

NOTES

1.) CONDUIT TO BE SIZED PER NEC, MINIMUM ¾", EXCEPT WHERE NOTED OTHERWISE.

2.) CONDUCTORS TO BE SIZED PER NEC, MINIMUM #12 AWG COPPER EXCEPT WHERE NOTED OTHERWISE. ALL 120 VAC BRANCH CIRCUITS OVER 100 FEET LONG SHALL NOT BE LESS THAN #10 AWG COPPER.

3.) ALL ELECTRICAL EQUIPMENT SHALL BE FURNISHED IN CONFORMANCE WITH NFPA 70 (NEC MOST CURRENT ISSUE). THE RESPECTIVE EQUIPMENT MANUFACTURER'S DIRECTIONS, AND ALL OTHER APPLICABLE LOCAL CODES, LAWS, ORDINANCES AND REQUIREMENTS IN FORCE. ANY INSTALLATIONS WHICH VOID THE U.L. LISTINGS (OR ANY OTHER THIRD PARTY LISTING) AND/OR THE MANUFACTURER'S WARRENTY OF A DEVICE SHALL NOT BE PERMITTED.

4.) ELECTRICAL CONTRACTOR SHALL CUT ALL WALL AND FLOOR OPENINGS IN CONNECTION WITH ELECTRICAL WORK IN EXISTING CONSTRUCTION & SHALL BE RESPONSIBLE FOR ALL PATCHING OF SAID OPENINGS. PATCHING IN EXISTING CONSTRUCTION TO MATCH EXISTING.

5.) WALL SWITCHES SHALL BE MOUNTED 48" A.F.F. TO TOP (TYP.) EXCEPT AS NOTED ON PLANS.

6.) RECEPTACLE OUTLETS SHALL BE MOUNTED 16" A.F.F. TO BOTTOM OF DEVICE, EXCEPT AS NOTED ON PLANS.

7.) ADDITIONAL LEGENDS MAY BE FOUND ON PLAN DRAWINGS FOR SPECIFIC AREAS OF CONSTRUCTION (FIRE PROTECTION, SECURITY, ETC.)

SCHEMATIC LEGEND

- NORMALLY OPEN (N.O.) CONTACT.
- NORMALLY CLOSED (N.C.) CONTACT.
- STARTER COIL. • = STARTER NUMBER
- OVERLOAD RELAY CONTACT
- CONTROL RELAY. • = CONTROL RELAY NUMBER
- TIME DELAY RELAY. • - DEVICE NUMBER. •• - TIME SETTING.
- CLOSED SWITCH WITH TIME DELAY OPENING
- OPEN SWITCH WITH TIME DELAY CLOSING
- CLOSED SWITCH WITH TIME DELAY CLOSING
- OPEN SWITCH WITH TIME DELAY OPENING
- PERCENTAGE TIMER. • = PRECENTAGE TIMER NUMBER
- PILOT LIGHT. (P)=LETTER DENOTING COLOR, E.G. R=RED, G=GREEN, A=AMBER
- HORN
- SOLENOID VALVE. • = SOLENOID VALVE NUMBER
- 3-POSITION SELECTOR SWITCH (H-O-A SHOWN)
- 2-POSITION SELECTOR SWITCH
- PUSHBUTTONS: N.C. (STOP), N.O. (START)
- ILLUMINATED PUSH/PULL, 3 POSITION PUSHBUTTON.
- PRESSURE SWITCHES: N.C., N.O.
- LEVEL SWITCHES: N.C., N.O.
- THERMAL SWITCHES: N.C., N.O.
- FLOW SWITCHES: N.C., N.O.
- LIMIT SWITCHES: N.C., N.O.
- PROXIMITY SWITCHES: N.C., N.O.
- HUMIDISTATS: N.C., N.O.
- CONNECTOR, DISCONNECTING DEVICE
- TIME CLOCK
- PHOTOCELL
- TERMINAL BLOCK. • = TERMINAL NUMBER
- DEVICE TERMINAL. • = DEVICE TERMINAL NUMBER
- RUN TIME METER, HOUR METER
- EXISTING INTERNAL PANEL WIRING OR DEVICES
- PROPOSED INTERNAL PANEL WIRING OR DEVICES
- EXISTING FIELD WIRING OR DEVICES
- PROPOSED FIELD WIRING OR DEVICES

SYMBOL	DESCRIPTION	DATE	APPROVED

REVISIONS

U.S. ARMY ENGINEER DISTRICT, ST. LOUIS
CORPS OF ENGINEERS
ST. LOUIS, MISSOURI

DESIGNED BY: DC
DRAWN BY: DLB
CHECKED BY: JEH
DATE: NOVEMBER, 1996
SUBMITTED:
DESIGN ENGINEER
SUBMITTED: GARY M. JONES
CHIEF, MECH./ELEC. SECTION
APPROVED: BOBBY R. HUCHEY
CHIEF, DESIGN BRANCH

UPPER MISSISSIPPI RIVER BASIN
MISSISSIPPI RIVER - ALTON, ILLINOIS
MELVIN PRICE LOCKS AND DAM
VISITOR CENTER
ELECTRICAL

SYMBOLS, GENERAL NOTES AND ABBREVIATIONS

SIZE: D | DWG. CODE: DACW 43 | DRAWING NO.: M-MP-2/E-1
DESIGN FILE: n:\melprice\visitor\mpvce001.dgn | PLOT DATE: 15-OCT-1996 05:55
PLOT SCALE: 1:1 | SOL. NO. DACW43-97-B-0204 | FILE NO.

CMT
CRAWFORD, MURPHY & TILLY, INC.

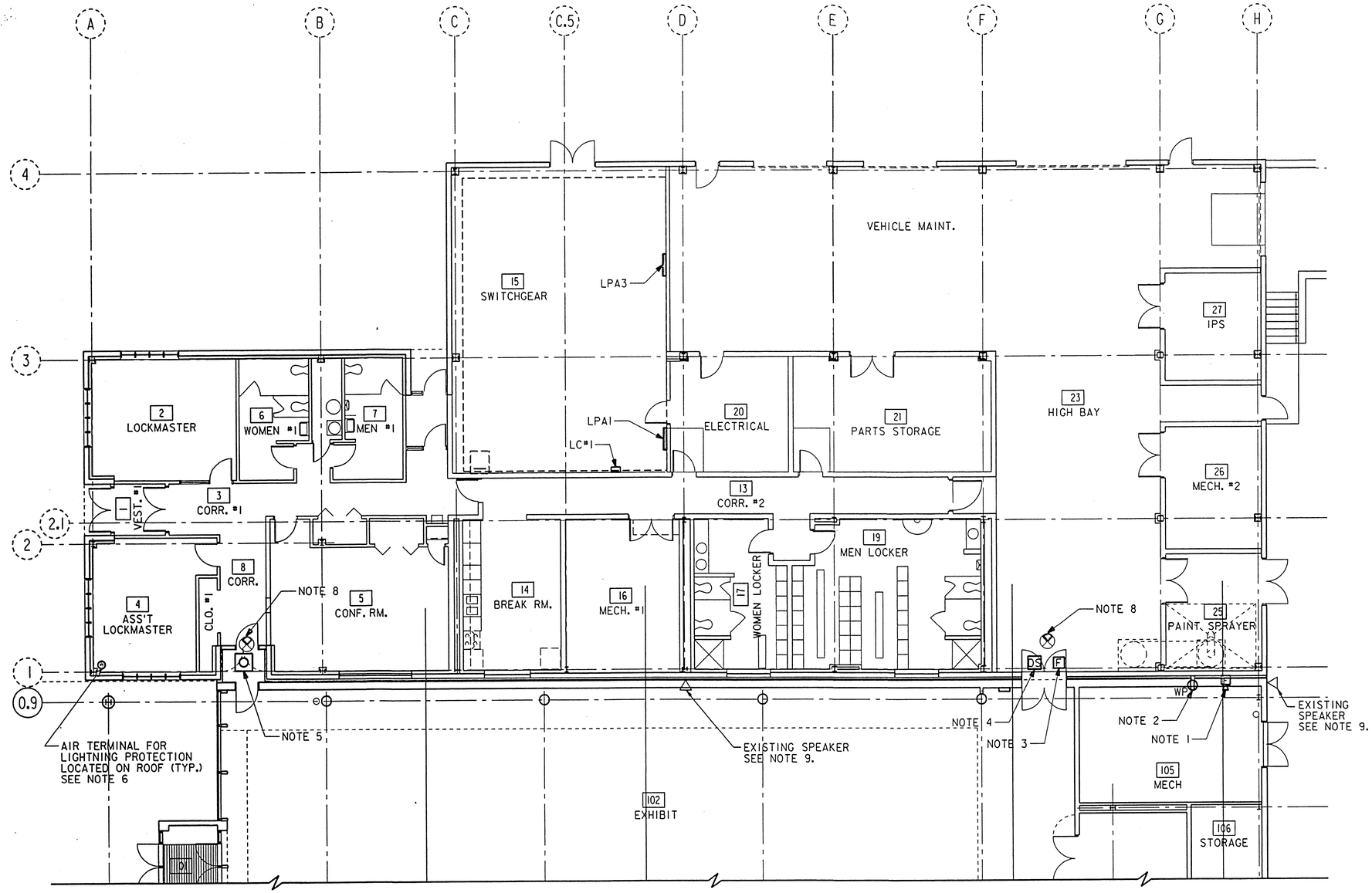

ELECTRICAL DEMOLITION PLAN

SCALE = 1/8"=1'-0"

NOTES

1.) FIRE ALARM AUDIBLE DEVICE TO BE REMOVED. TERMINATE SIGNALING CONDUCTORS PER MANUFACTURER'S RECOMMENDATIONS SUCH THAT FIRE ALARM SYSTEM REMAINS COMPLETELY OPERATIONAL. COVER BACK BOX WITH BLANK PLATE SUITABLE FOR EXTERIOR USE.

2.) WEATHERPROOF GFI DUPLEX RECEPTACLE TO BE REMOVED. RECEPTACLE CONNECTED TO PANEL LPA3 LOCATED IN SWITCHGEAR ROOM, CIRCUIT NUMBER 2.

3.) FIRE ALARM PULL STATION TO BE RELOCATED TO AVOID CONFLICT WITH NEW WIDER DOOR NUMBER 128B. SEE ARCHITECTURAL AND STRUCTURAL DRAWINGS.

4.) DOOR MONITOR SWITCH TO BE REMOVED FROM EXISTING DOOR AND REINSTALLED ON NEW DOOR NUMBER 128B. SEE ALSO SECURITY PLAN DWG., E-13.

5.) RECESSED SQUARE HID LIGHT FIXTURE TO BE REMOVED. FIXTURE CONNECTED TO LPA1-17 VIA LIGHTING CONTACTOR LC #1.

6.) EXISTING LIGHTNING PROTECTION SYSTEM. ANY COMPONENT OF THE EXISTING SYSTEM THAT IS REQUIRED TO BE REMOVED DURING THE CONSTRUCTION OF THE VISITOR CENTER SHALL BE REMOVED BY THE ELECTRICAL CONTRACTOR. EXISTING LIGHTNING PROTECTION SYSTEM IS TO REMAIN COMPLETELY FUNCTIONAL.

7.) LOCATIONS OF LPA1, LPA3 AND LC #1 SHOWN FOR INFORMATION ONLY.

8.) EXISTING EXIT SIGN TO BE REMOVED. REMAINING RACEWAY AND CONDUCTORS TO BE SUITABLY TERMINATED.

9.) TWO EXISTING SPEAKERS ON SOUTH WALL OF EXISTING ADMINISTRATION-MAINTENANCE BUILDING SHALL BE REMOVED FROM SERVICE. COORDINATE REMOVAL AND DISPOSITION OF REMOVED EQUIPMENT WITH THE CONTRACTING OFFICER.

10.) REMOVE EXISTING LIGHTNING PROTECTION TRIANGULAR GROUND FIELDS FROM THE PLAN SOUTH SIDE OF THE EXISTING ADMINISTRATION-MAINTENANCE BUILDING. SEE REFERENCE DRAWING M-L26(R) 90/86 (DWG. E-4) FOR EXISTING SYSTEM DETAIL.

AS BUILT

SYMBOL	DESCRIPTION	DATE	APPROVED

REVISIONS

U.S. ARMY ENGINEER DISTRICT, ST. LOUIS
CORPS OF ENGINEERS
ST. LOUIS, MISSOURI

DESIGNED BY: DC
DRAWN BY: DLB
CHECKED BY: JEH
DATE: NOVEMBER, 1996

SUBMITTED:
DESIGN ENGINEER

SUBMITTED: GARY M. JONES
CHIEF, MECH./ELEC. SECTION

APPROVED: BOBBY R. HUGHEY
CHIEF, DESIGN BRANCH

UPPER MISSISSIPPI RIVER BASIN
MISSISSIPPI RIVER - ALTON, ILLINOIS
MELVIN PRICE LOCKS AND DAM
VISITOR CENTER
ELECTRICAL
ADMINISTRATION-MAINTENANCE BUILDING
DEMOLITION PLAN

SIZE	DWG. CODE	DRAWING NO.
D	DACW 43	M-MP-2/E-2

DESIGN FILE: n:\melprice\visitor\mpvce002.dgn | PLOT DATE: 15-OCT-1996 06:08
PLOT SCALE: 1:8 | SOL. NO. DACW43-97-B-0204 | FILE NO.

CMT
CRAWFORD, MURPHY & TILLY, INC.

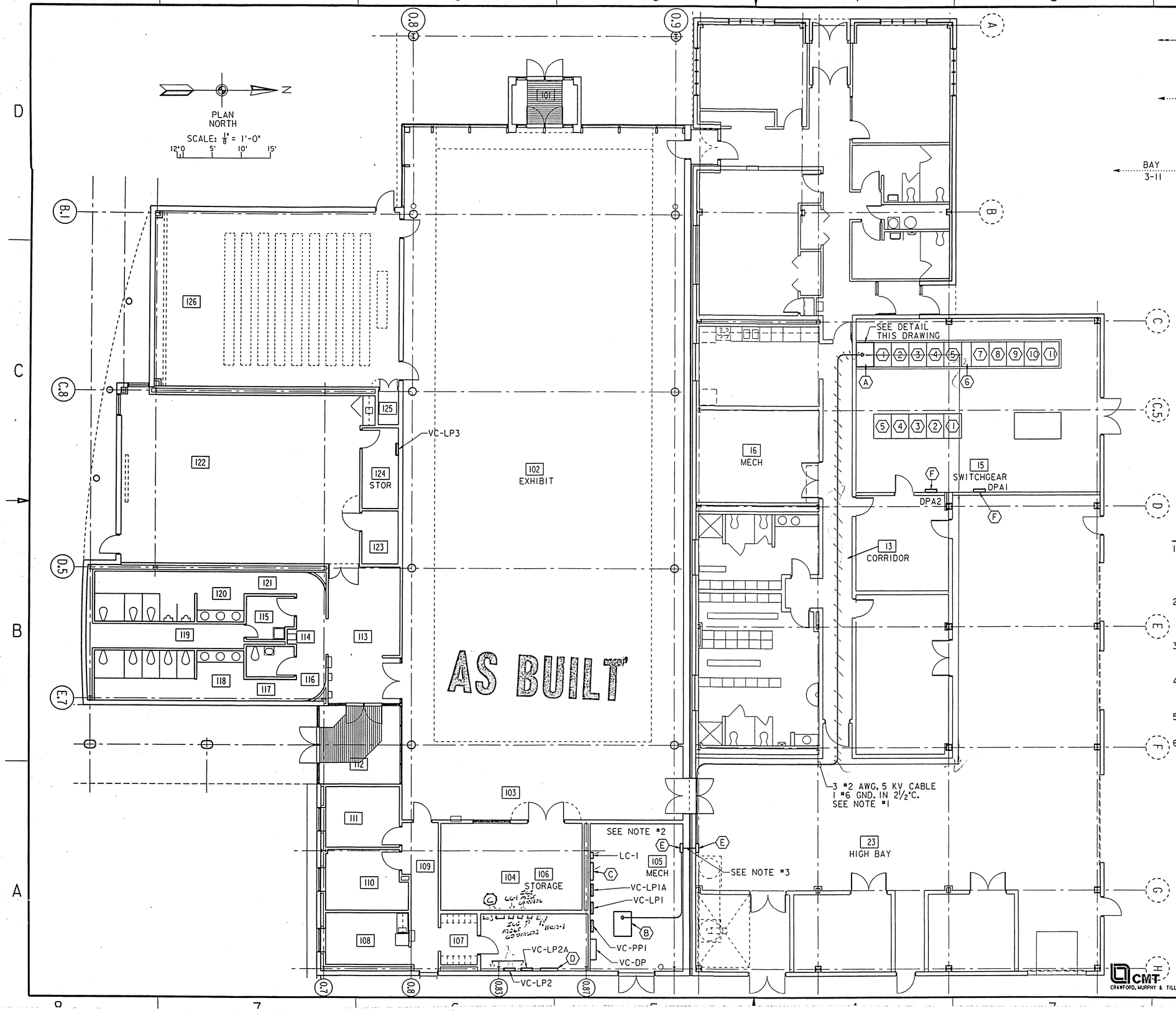

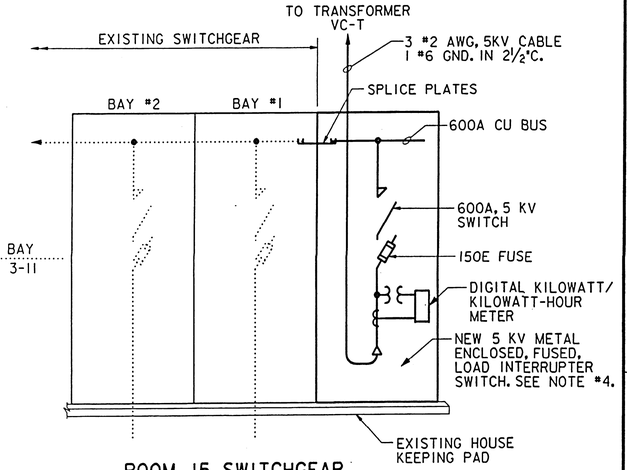

ROOM 15 SWITCHGEAR
5 KV SWITCHGEAR EXTENSION

LEGEND

(A) 5 KV INDOOR, METAL-ENCLOSED, FUSED LOAD INTERRUPTER SWITCH. INSTALLED ON EXISTING CONCRETE EQUIPMENT PAD AND CONNECTED TO EXISTING HIGH-VOLTAGE BUS. SEE ONE-LINE DIAGRAM & SPECIFICATIONS.

(B) VC-T: DRY TYPE TRANSFORMER, 500 KVA, 4160 DELTA: 208Y/120V THREE PHASE, INDOOR, FLOOR MOUNTED. PROVIDE WITH 4" HIGH CONCRETE HOUSE KEEPING PAD. SEE ONE-LINE DIAGRAM & SPECIFICATIONS.

(C) EXHIBIT ROOM DIMMER CONTROL PANEL, SEE EXHIBIT ROOM 102 - DIMMING CONTROL DIAGRAM.

(D) EXTERIOR LIGHTING CONTACTORS LC #2, LC #3, LC #4, LC #5 IN COMMON NEMA 1 ENCLOSURE, SEE EXTERIOR LIGHTING CONTROL DETAIL.

(E) PULL BOX FOR TRANSFORMER FEEDER CONDUCTORS. NEMA 1 ENCLOSURE 18x18x6 MINIMUM SIZE. BOX TO BE INSTALLED PERPENDICULAR TO WALL WITH COVER FACING UP.

(F) EXISTING PANELBOARD TO BE USED FOR TEMPORARY POWER, SEE NOTE DWG. E-4.

NOTES

1.) ROUTE CONDUIT ABOVE DROP CEILING IN ROOM 13 - CORRIDOR TO ROOM 23 HIGH BAY. CONDUIT TO BE EXPOSED IN ROOM 23 MOUNT AT 12'-0" A.F.F., COORDINATE ROUTING TO AVOID CONFLICTS WITH EXISTING EQUIPMENT. 5KV CABLES SHALL NOT BE BENT TO A RADIUS LESS THAN 12 TIMES THE DIAMETER OF THE CABLE DURING OR AFTER INSTALLATION.

2.) CONTRACTOR SHALL COORDINATE AND VERIFY LOCATION OF MECHANICAL EQUIPMENT AND LEVEL OF PIPES, DUCTS, ETC. SO THAT CONFLICTS MAY BE AVOIDED. NO PIPING CONVEYING FLUIDS SHALL BE INSTALLED DIRECTLY OVER ELECTRICAL PANELBOARDS.

3.) OPENING AROUND ELECTRICAL PENETRATION THROUGH FIRE-RESISTANT RATED WALLS SHALL BE FIRE STOPPED USING APPROVED METHODS TO MAINTAIN THE FIRE RESISTANCE RATING.

4.) EXISTING SWITCHGEAR: SQUARE D POWER - ZONE HVL LOAD INTERRUPTER SWITCHGEAR. SWITCHGEAR MANUFACTURER SHALL FURNISH ALL NECESSARY HARDWARE FOR ASSEMBLY OF NEW TO EXISTING SWITCHGEAR.

5.) VC-DP SHALL BE LOCATED A MINIMUM OF 42" FROM THE NEAREST EDGE OF THE ENTRANCE TO ROOM 105 - MECHANICAL.

6.) ALL PANELBOARDS SHALL HAVE A MINIMUM CLEAR WORK SPACE OF 36 INCHES MEASURED FROM FRONT OF THE PANELBOARD.

SYMBOL	DESCRIPTION	DATE	APPROVED

REVISIONS

U.S. ARMY ENGINEER DISTRICT, ST. LOUIS
CORPS OF ENGINEERS
ST. LOUIS, MISSOURI

DESIGNED BY: DC
DRAWN BY: DLB
CHECKED BY: JEH
DATE: NOVEMBER, 1996

SUBMITTED:
DESIGN ENGINEER

SUBMITTED:
GARY M. JONES
CHIEF, MECH./ELEC. SECTION

APPROVED:
BOBBY R. HUGHEY
CHIEF, DESIGN BRANCH

UPPER MISSISSIPPI RIVER BASIN
MISSISSIPPI RIVER - ALTON, ILLINOIS
MELVIN PRICE LOCKS AND DAM
VISITOR CENTER

ELECTRICAL
ADMINISTRATION-MAINTENANCE
VISITOR CENTER
COMBINED FLOOR PLAN

SIZE	DWG. CODE	DRAWING NO.
D	DACW 43	M-MP-2/E-3

DESIGN FILE: n:\melprice\visitor\mpvce003.dgn | PLOT DATE: 15-OCT-1996 06:10
PLOT SCALE: 1:8 | SOL. NO. DACW43-97-B-0204 | FILE NO.

CMT
CRAWFORD, MURPHY & TILLY, INC.

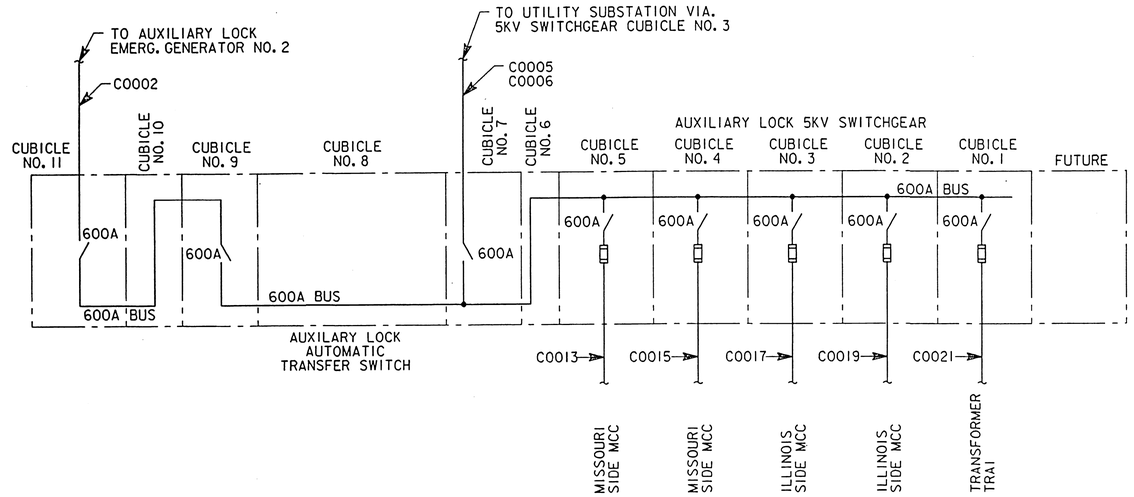

1 EXISTING SINGLE LINE DIAGRAM

SINGLE LINE FEEDER SCHEDULE					
FEEDER NO.	CABLES			CONDUIT SIZE	REMARKS
	NO. COND.	SIZE	GND. SIZE		
C0030	3	2	6	2½"	5KV CABLE
VC-T1	4 SET OF 4	500	3/0	(4) 3½"	
VC-DP1	2 SET OF 4	3/0	3	(2) 2"	
VC-DP2	4	4/0	4	2½"	
VC-DP3	4	4/0	4	2½"	
VC-DP4	4	4/0	4	2½"	
VC-DP5	3	500	2	3"	

TEMPORARY POWER

SOURCE FOR TEMPORARY POWER DURING CONSTRUCTION SHALL BE:
1) 480Y/277V 3 PHASE - EXISTING PANEL DPA1
2) 208Y/120V 3 PHASE - EXISTING PANEL DPA2
PROJECTED LOAD REQUIREMENTS SHALL BE APPROVED BY CONTRACTING OFFICER BEFORE MAKING CONNECTIONS. SEE DWG. E-3 FOR PANEL LOCATIONS.

2-2" CONDUITS SHOWN AS PROPOSED ON DWG. E-16 FROM SWITCHGEAR ROOM TO PLAN SOUTH WALL OF HIGH BAY SHALL BE USED AS THE RACEWAY FOR TEMPORARY POWER CABLES UNTIL PERMANENT SERVICE FOR VISITOR CENTER IS INSTALLED

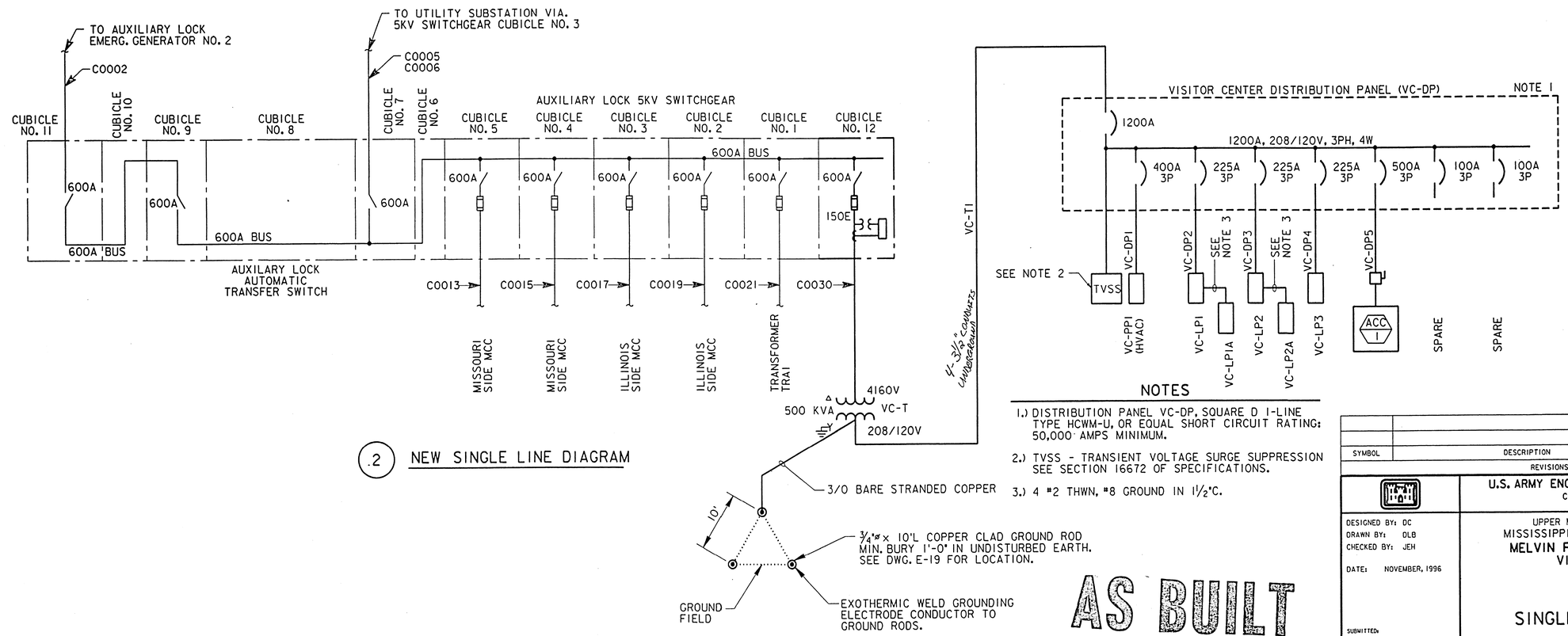

2 NEW SINGLE LINE DIAGRAM

NOTES

1.) DISTRIBUTION PANEL VC-DP, SQUARE D I-LINE TYPE HCWM-U, OR EQUAL SHORT CIRCUIT RATING: 50,000 AMPS MINIMUM.

2.) TVSS - TRANSIENT VOLTAGE SURGE SUPPRESSION SEE SECTION 16672 OF SPECIFICATIONS.

3.) 4 #2 THWN, #8 GROUND IN 1½"C.

AS BUILT

CMT
CRAWFORD, MURPHY & TILLY, INC.

SYMBOL	DESCRIPTION	DATE	APPROVED

REVISIONS

U.S. ARMY ENGINEER DISTRICT, ST. LOUIS
CORPS OF ENGINEERS
ST. LOUIS, MISSOURI

DESIGNED BY: DC
DRAWN BY: DLB
CHECKED BY: JEH
DATE: NOVEMBER, 1996

UPPER MISSISSIPPI RIVER BASIN
MISSISSIPPI RIVER - ALTON, ILLINOIS
MELVIN PRICE LOCKS AND DAM
VISITOR CENTER
ELECTRICAL

SINGLE LINE DIAGRAM

SUBMITTED: DESIGN ENGINEER
SUBMITTED: GARY M. JONES, CHIEF, MECH./ELEC. SECTION
APPROVED: BOBBY R. HUCHEY, CHIEF, DESIGN BRANCH

SIZE: D | DWG. CODE: DACW 43 | DRAWING NO. M-MP-2/E-4

DESIGN FILE: n:\melprice\visitor\mpvce004.dgn | PLOT DATE: 15-OCT-1996 06:12
PLOT SCALE: 1:1 | SOL. NO. DACW43-97-B-0204 | FILE NO.

PANEL SCHEDULE

PANEL DESIGNATION: VC-LP1
LOCATION: ROOM 105 MECH
TYPE: SQUARE D NQOD
POLE: 42

VOLTS: 208Y/120
PHASE: THREE
WIRE: 4
MOUNTING: SURFACE
AMPS: 225
MAINS: LUGS

CKT NO.	LOAD	BREAKER SIZE	PHASE AMPS A	PHASE AMPS B	PHASE AMPS C	POLE NO.	POLE NO.	PHASE AMPS A	PHASE AMPS B	PHASE AMPS C	BREAKER SIZE	LOAD	CKT NO.
1	PANEL LP1A	100A-3P	70			1	2	7.5			20A-1P	IN FLOOR BOX	2
3		---		53		3	4		7.5		20A-1P	IN FLOOR BOX	4
5		---			51	5	6			7.5	20A-1P	IN FLOOR BOX	6
7	LIGHTS - RM. 103	20A-1P	8.4			7	8	7.5			20A-1P	IN FLOOR BOX	8
9	EM. LTS - RM. 102,105,107	20A-1P		2.7		9	10		7.5		20A-1P	IN FLOOR BOX	10
11	LIGHTS - RM. 104	20A-1P			11.1	11	12			7.5	20A-1P	IN FLOOR BOX	12
13	LIGHTS-RM. 101,127	20A-1P	1.2			13	14	7.5			20A-1P	IN FLOOR BOX	14
15	SPARE	20A-1P				15	16		7.5		20A-1P	IN FLOOR BOX	16
17	SPARE	20A-1P				17	18			7.5	20A-1P	IN FLOOR BOX	18
19	SPARE ZONE 1	20A-1P				19	20	7.5			20A-1P	IN FLOOR BOX	20
21	SPARE	20A-1P				21	22		6.0		20A-1P	RECEPTS. - RM. 102,104	22
23	SPARE ZONE 3	20A-1P				23	24			6.0	20A-1P	RECEPTS. - RM. 102,104	24
25	SPARE	20A-1P				25	26	6.0			20A-1P	RECEPTS. - RM. 102,104	26
27	SPARE ZONE 2	20A-1P				27	28		4.5		20A-1P	RECEPTS. - RM. 103,104	28
29	SPARE	20A-1P				29	30			3	20A-1P	RECEPTS. - RM. 103,104	30
31	SPARE ZONE 4	20A-1P				31	32	17.0			20A-1P	EB-1	32
33	SPARE	20A-1P				33	34		17.0		20A-1P	EB-1	34
35	SPARE ZONE 5	20A-1P				35	36				20A-1P	SPARE	36
37	SPARE	20A-1P				37	38				20A-1P	SPARE	38
39	SPARE	20A-1P				39	40				20A-1P	SPARE	40
41	SPARE	20A-1P				41	42				20A-1P	SPARE	42
			79.6	55.7	62.1			53	50	31.5			

PHASE TOTAL AMPS: A 132.6, B 105.7, C 93.6
PHASE TOTAL VA: A 15912, B 12684, C 11232

TOTAL CONNECTED LOAD: 39828 VA

FEEDER:
WIRE SIZE: 4/0
WIRE TYPE: THWN
WIRES PER CONDUIT: 4
CONDUIT SIZE: 2 1/2"
NO. OF CONDUITS: 1
GROUND CONDUCTOR: #4
SHORT CIRCUIT RATING: 22,000 A

Room 102

PANEL SCHEDULE

PANEL DESIGNATION: VC-LP2
LOCATION: ROOM 106 - STORAGE
TYPE: SQUARE D NQOD
POLE: 42

VOLTS: 208Y/120
PHASE: THREE
WIRE: 4
MOUNTING: FLUSH
AMPS: 225
MAINS: LUGS

CKT NO.	LOAD	BREAKER SIZE	PHASE AMPS A	PHASE AMPS B	PHASE AMPS C	POLE NO.	POLE NO.	PHASE AMPS A	PHASE AMPS B	PHASE AMPS C	BREAKER SIZE	LOAD	CKT NO.
1	LIGHTS - RM 105	20A-1P	3.3			1	2	4.5			20A-1P	RECEPTS. - RM. 105	2
3	LIGHTS - RM 106,107,MEZZ	20A-1P		5.0		3	4		4.5		20A-1P	RECEPTS. - RM. 105	4
5	LIGHTS - RM 108,109	20A-1P			4.3	5	6			6	20A-1P	RECEPTS. - RM. 106, 107, 109	6
7	LIGHTS - RM 110,111	20A-1P	4.4			7	8	1.5			20A-1P	RECEPTS. - RM. 106	8
9	LIGHTS - RM 112,113	20A-1P		7.3		9	10		1.5		20A-1P	RECEPTS. - RM. 108	10
11	LIGHTS - RM 117,118	20A-1P			2.3	11	12			5	20A-1P	RM. 108 REFRIGERATOR	12
13	LIGHTS - RM 115,116,119	20A-1P	2.2			13	14	13			20A-1P	RM. 108 MICROWAVE	14
15	LIGHTS - RM 114,120,121	20A-1P		4.1		15	16		15		20A-1P	RM. 108 ICEMAKER	16
17	PANEL LP2A	100A-3P			38.8	17	18			7.5	20A-1P	RECEPTS. - RM. 110, 111	18
19		---	35.9			19	20	6			20A-1P	RECEPTS. - RM. 110, 111	20
21		---		35.9		21	22		7.5		20A-1P	RECEPTS. - RM. 110, 111	22
23	RM 102,109, CCTV CAMERA	20A-1P			1	23	24			6	20A-1P	RECEPTS. - RM. 112, 113	24
25	EXTERIOR CCTV #39	20A-1P	0.5			25	26	4.5			20A-1P	RECEPTS. - RM. 115, 116	26
27	FLUSH VALVE SOLENOIDS	20A-1P		8		27	28		6		20A-1P	RECEPTS. - RM. 117, 121	28
29	FLUSH VALVE SOLENOIDS	20A-1P			9	29	30			3	20A-1P	RECEPTS. - RM. 118, 120	30
31	HEAT TRACE (NOTE 5)	20A-3P	8			31	32	5			20A-1P	WATER COOLER	32
33		---		8		33	34		1.5		20A-1P	RECEPTS. - RM. 106	34
35		---			8	35	36				20A-1P	SPARE	36
37	HEAT TRACE (NOTE 5)	20A-3P	8			37	38	1			20A-3P	GATE CONTROLLER	38
39		---		8		39	40		1		---		40
41		---			8	41	42			1	---		42
			62.3	76.3	71.4			35.5	37	28.5			

PHASE TOTAL AMPS: A 97.8, B 113.3, C 99.9
PHASE TOTAL VA: A 11736, B 13596, C 11988

TOTAL CONNECTED LOAD: 37320 VA

FEEDER:
WIRE SIZE: 4/0
WIRE TYPE: THWN
WIRES PER CONDUIT: 4
CONDUIT SIZE: 2 1/2"
NO. OF CONDUITS: 1
GROUND CONDUCTOR: #4
SHORT CIRCUIT RATING: 22,000 A

PANEL SCHEDULE

PANEL DESIGNATION: VC-LP3
LOCATION: ROOM 124 STORAGE
TYPE: SQUARE D NQOD
POLE: 42

VOLTS: 208Y/120
PHASE: THREE
WIRE: 4
MOUNTING: SURFACE
AMPS: 225
MAINS: LUGS

CKT NO.	LOAD	BREAKER SIZE	PHASE AMPS A	PHASE AMPS B	PHASE AMPS C	POLE NO.	POLE NO.	PHASE AMPS A	PHASE AMPS B	PHASE AMPS C	BREAKER SIZE	LOAD	CKT NO.
1	LIGHTS - RM. 122	20A-1P	9.1			1	2				20A-1P	VIDEO PROJECTOR(NIC)	2
3	LIGHTS - RM. 123,124,125	20A-1P		2.8		3	4		1.3		20A-1P	PROJECTION SCREEN	4
5	LIGHTS - RM. 126	20A-1P			13.3	5	6			6	20A-1P	RECEPTS. - RM. 122	6
7	FUTURE TRACK LIGHTS	20A-1P				7	8	6			20A-1P	RECEPTS. - RM. 122,124	8
9	FUTURE TRACK LIGHTS	20A-1P				9	10		6		20A-1P	RECEPTS. - RM. 122	10
11	FUTURE TRACK LIGHTS	20A-1P				11	12			7.5	20A-1P	RECEPTS. - RM. 122	12
13	FLOOR BOX	20A-1P	3			13	14	7.5			20A-1P	RECEPTS. - RM. 123	14
15	FLOOR BOX	20A-1P		3		15	16		3		20A-1P	RECEPTS. - RM. 123	16
17	FLOOR BOX	20A-1P			3	17	18			6	20A-1P	RECEPTS. - RM. 125	18
19	FLOOR BOX	20A-1P	3			19	20	6			20A-1P	RECEPTS. - RM. 126	20
21	FLOOR BOX	20A-1P		3		21	22		2		20A-1P	ACCESS CONTROLLERS	22
23	FLOOR BOX	20A-1P			3	23	24				20A-1P	SPARE	24
25	FLOOR BOX	20A-1P	3			25	26				20A-1P	SPARE	26
27	FLOOR BOX	20A-1P		3		27	28				20A-1P	SPARE	28
29	FLOOR BOX	20A-1P			3	29	30				20A-1P	SPARE	30
31	FLOOR BOX	20A-1P	3			31	32				20A-1P	SPARE	32
33	FLOOR BOX	20A-1P		3		33	34				20A-1P	SPARE	34
35	FLOOR BOX	20A-1P			3	35	36				20A-1P	SPARE	36
37	RM. 122 REFRIGERATOR	20A-1P	5			37	38				20A-1P	SPARE	38
39	RM. 122 MICROWAVE	20A-1P		13		39	40				20A-1P	SPARE	40
41	RM. 122 ICEMAKER	20A-1P			15	41	42				20A-1P	SPARE	42
			26.1	27.8	40.3			19.5	12.3	19.5			

PHASE TOTAL AMPS: A 45.6, B 40.1, C 59.8
PHASE TOTAL VA: A 5472, B 4812, C 7176

TOTAL CONNECTED LOAD: 17460 VA

FEEDER:
WIRE SIZE: 4/0
WIRE TYPE: THWN
WIRES PER CONDUIT: 4
CONDUIT SIZE: 2 1/2"
NO. OF CONDUITS: 1
GROUND CONDUCTOR: #4
SHORT CIRCUIT RATING: 10,000 A

PANEL SCHEDULE

PANEL DESIGNATION: VC-PP1
LOCATION: ROOM 105 MECH
TYPE: SQUARE D I-LINE
POLE: 42

VOLTS: 208Y/120
PHASE: THREE
WIRE: 4
MOUNTING: SURFACE
AMPS: 400
MAINS: LUGS

CKT NO.	LOAD	BREAKER SIZE	PHASE AMPS A	PHASE AMPS B	PHASE AMPS C	POLE NO.	POLE NO.	PHASE AMPS A	PHASE AMPS B	PHASE AMPS C	BREAKER SIZE	LOAD	CKT NO.
1	S-1	110-3P	46.2			1	2	2.3			15A-3P	EF-1	2
3		---		46.2		3	4		2.3		---		4
5		---			46.2	5	6			2.3	---		6
7	R/E-1	60A-3P	24.2			7	8				20A-1P	SPARE	8
9		---		24.2		9	10				20A-1P	SPARE	10
11		---			24.2	11	12				20A-1P	SPARE	12
13	CHWP-1A	30A-3P	10.6			13	14				20A-1P	SPARE	14
15		---		10.6		15	16		2.5		15A-1P	TE-1	16
17		---			10.6	17	18			1.7	15A-1P	CUH-1	18
19	CHWP-1B	30A-3P	10.6			19	20	5			15A-1P	CP-1	20
21		---		10.6		21	22		5.4		15A-1P	CP-2	22
23		---			10.6	23	24			2.5	15A-1P	CP-3	24
25	HWP-1A	15A-3P	2.8			25	26	3.6			15A-1P	CP-4	26
27		---		2.8		27	28		1.5		15A-1P	SPARE	28
29		---			2.8	29	30			3.6	15A-1P	SPARE	30
31	HWP-1B	15A-3P	2.8			31	32	12			20A-1P	HWB-1	32
33		---		2.8		33	34		55		60A-3P	HUM-1	34
35		---			2.8	35	36			55	---		36
37	HRP-1	15A-3P	2.3			37	38	55			---		38
39		---		2.3		39	40		10		20A-1P	HEATING CONTROLS	40
41		---			2.3	41	42			10	20A-1P	COOLING CONTROLS	42
			99.5	99.5	99.5			77.9	76.7	75.1			

PHASE TOTAL AMPS: A 177.4, B 176.2, C 174.6
PHASE TOTAL VA: A 21288, B 21144, C 20952

TOTAL CONNECTED LOAD: 63384 VA

FEEDER:
WIRE SIZE: 3/0
WIRE TYPE: THWN
WIRES PER CONDUIT: 4
CONDUIT SIZE: 2 1/2"
NO. OF CONDUITS: 2
GROUND CONDUCTOR: #3
SHORT CIRCUIT RATING: 22,000 A

AS BUILT

NOTES

1.) INCLUDE LEGEND PLATES FOR EACH PANEL, ONE WITH PANEL DESIGNATION AN ADDITIONAL LEGEND PLATE LABELED 'THIS PANEL IS FED FROM VC-DP LOCATED IN MECHANICAL EQUIPMENT ROOM 105'.

2.) INCLUDE 3 PHASE LIGHTNING ARRESTER SQUARE D CAT. NO. SDSA3650, OR EQUAL, FOR EACH LIGHTING PANEL. SEE SPECS.

3.) SEE ALSO PANEL SCHEDULE VC-LP1A LOCATED DWG. E-9 AND VC-LP2A LOCATED DWG. E-17.

4.) MOTOR AMPACITIES SHOWN ON PANEL SCHEDULES ARE NOMINAL VALUES.

5.) HEAT TRACE CIRCUITS PROTECTED BY GROUND FAULT BREAKERS WITH 30 MILLIAMP TRIP.

SYMBOL	DESCRIPTION	DATE	APPROVED

REVISIONS

U.S. ARMY ENGINEER DISTRICT, ST. LOUIS
CORPS OF ENGINEERS
ST. LOUIS, MISSOURI

DESIGNED BY: DC
DRAWN BY: DLB
CHECKED BY: JEH
DATE: NOVEMBER, 1996
SUBMITTED:
DESIGN ENGINEER

UPPER MISSISSIPPI RIVER BASIN
MISSISSIPPI RIVER - ALTON, ILLINOIS
MELVIN PRICE LOCKS AND DAM
VISITOR CENTER
ELECTRICAL

PANEL SCHEDULES

SUBMITTED: GARY M. JONES, CHIEF, MECH./ELEC. SECTION
APPROVED: BOBBY R. HUGHEY, CHIEF, DESIGN BRANCH

SIZE: D | DWG. CODE: DACW 43 | DRAWING NO.: M-MP-2/E-5

DESIGN FILE: n:\melprice\visitor\mpvce005.dgn | PLOT DATE: 15-OCT-1996 06:15
PLOT SCALE: 1:1 | SOL. NO. DACW43-97-B-0204 | FILE NO.

CMT
CRAWFORD, MURPHY & TILLY, INC.

ROOM SCHEDULE

ROOM NO.	ROOM NAME
101	VESTIBULE
102	EXHIBITS
103	RECEPTION
104	SALES
105	MECHANICAL
106	STORAGE
107	LOCKERS
108	BREAK
109	HALL
110	OFFICE
111	OFFICE
112	VESTIBULE
113	ALCOVE
114	ALCOVE
115	JANITOR
116	CHANGE
117	HALL
118	WOMEN
119	CHASE
120	MEN
121	HALL
122	MULTI-PURPOSE
123	CONTROL
124	STORAGE
125	STORAGE
126	AUDIO/VISUAL
127	ALCOVE
128	ALCOVE

NOTES

1.) JUNCTION BOX FOR FUTURE TRACK LIGHTING. MOUNT SECURELY ABOVE DROP CEILING. PROVIDE AND INSTALL CONDUCTORS AND CONDUIT FROM J-BOX TO PANEL VC-LP3. PROVIDE SUFFICIENT CONDUCTOR LENGTH AT J-BOX TO ALLOW FOR FUTURE SPLICES. PROVIDE LABELS AT J-BOX FOR ALL CONDUCTORS SHOWING CIRCUIT NUMBER.

2.) VIDEO PROJECTOR LOCATION (NIC). PROVIDE JUNCTION BOX ABOVE DROP CEILING AT LOCATION DIRECTED BY CONTRACTING OFFICER. PROVIDE ¾"C. WITH PULL STRING FROM J-BOX TO ROOM 125 FOR FUTURE WIRING.

3.) PROJECTOR SCREEN LOCATION. PROVIDE JUNCTION BOX ABOVE DROP CEILING AT LOCATION DIRECTED BY CONTRACTING OFFICER. PROVIDE 1"C. WITH PULL STRING FROM J-BOX TO ROOM 125 FOR FUTURE WIRING.

4.) FLUSH MOUNT DUPLEX RECEPTACLE IN FLOOR BOX (TYP. 2 LOCATIONS THIS ROOM).

5.) FLUSH MOUNT FLOOR BOX ACTIVATION LOCATION DEVICE TYPE. SEE DWG. E-10, 'FLOOR BOX DETAIL' TYPICAL ALL ACCESS LOCATIONS.

6.) 2-GANG FLUSH MOUNT FLOOR BOX FOR FUTURE ACTIVATION POINTS. PROVIDE AND INSTALL CONDUCTORS AND CONDUIT FROM PANEL VC-LP1 TO FLOOR BOX. PROVIDE SUFFICIENT CONDUCTOR LENGTH AT FLOOR BOX TO ALLOW FUTURE SPLICES. PROVIDE LABELS AT FLOOR BOX FOR ALL CONDUCTORS SHOWING CIRCUIT NUMBER. SEE ALSO COMMUNICATION PLAN DWG. E-16.

7.) ALL CONDUITS THIS DWG. INTERCONNECTING FLOOR BOXES ARE 1"C., ALL CONDUCTORS ARE #10 THWN.

8.) POWER OULETS LOCATED IN ROOM 125 - STORAGE SHALL BE WIREMOLD PLUGMOLD CATALOG NO. AL20GB306, OR EQUAL. 3 FOOT LENGTH, 6' RECEPTACLE SPACING.

9.) 2-GANG FLUSH MOUNT FLOOR BOX FOR FUTURE ACTIVATION POINTS FOR DISTANCE LEARNING CLASSROOM ELECTRONICS EQUIPMENT. PROVIDE AND INSTALL CONDUCTORS AND CONDUIT FROM PANEL VC-LP3 TO FLOOR BOX. PROVIDE SUFFICIENT CONDUCTOR LENGTH AT FLOOR BOX TO ALLOW FOR FUTURE SPLICES. PROVIDE LABELS AT FLOOR BOX FOR ALL CONDUCTORS SHOWING CIRCUIT NUMBER. SEE ALSO COMMUNICATION PLAN DWG. E-16.

10.) UNIT KITCHEN IN ADDITION TO RECEPTACLES SHOWN - PROVIDE AND INSTALL DEDICATED CIRCUIT FOR EACH OF THE FOLLOWING - 1) MICROWAVE, 2) ICEMAKER, 3) REFRIGERATOR. COORDINATE RECEPTACLE LOCATION WITH UNIT KITCHEN COMPONENTS SUPPLIED BY OTHERS. SEE PANEL SCHEDULE FOR CIRCUIT NUMBERS.

11.) COORDINATE RECEPTACLE LOCATION WITH TELECOMMUNICATIONS EQUIPMENT, SEE DWG. E-16.

12.) PROJECTOR SCREEN LOCATION. PROVIDE JUNCTION BOX ABOVE DROP CEILING AT LOCATION DIRECTED BY CONTRACTING OFFICER. PROVIDE ¾"C. WITH PULL STRING FROM J-BOX TO ROOM 123 FOR FUTURE WIRING.

13.) RECEPTACLES ARE NOT TO BE MOUNTED BACK TO BACK IN SAME STUD SPACE. TYPICAL ALL LOCATIONS UNLESS OTHERWISE NOTED.

14.) ALL EXTERIOR ROOF DRAINS FOR THE WALKWAY CANOPY SHALL BE HEAT TRACED PER THE SPECIFICATIONS.

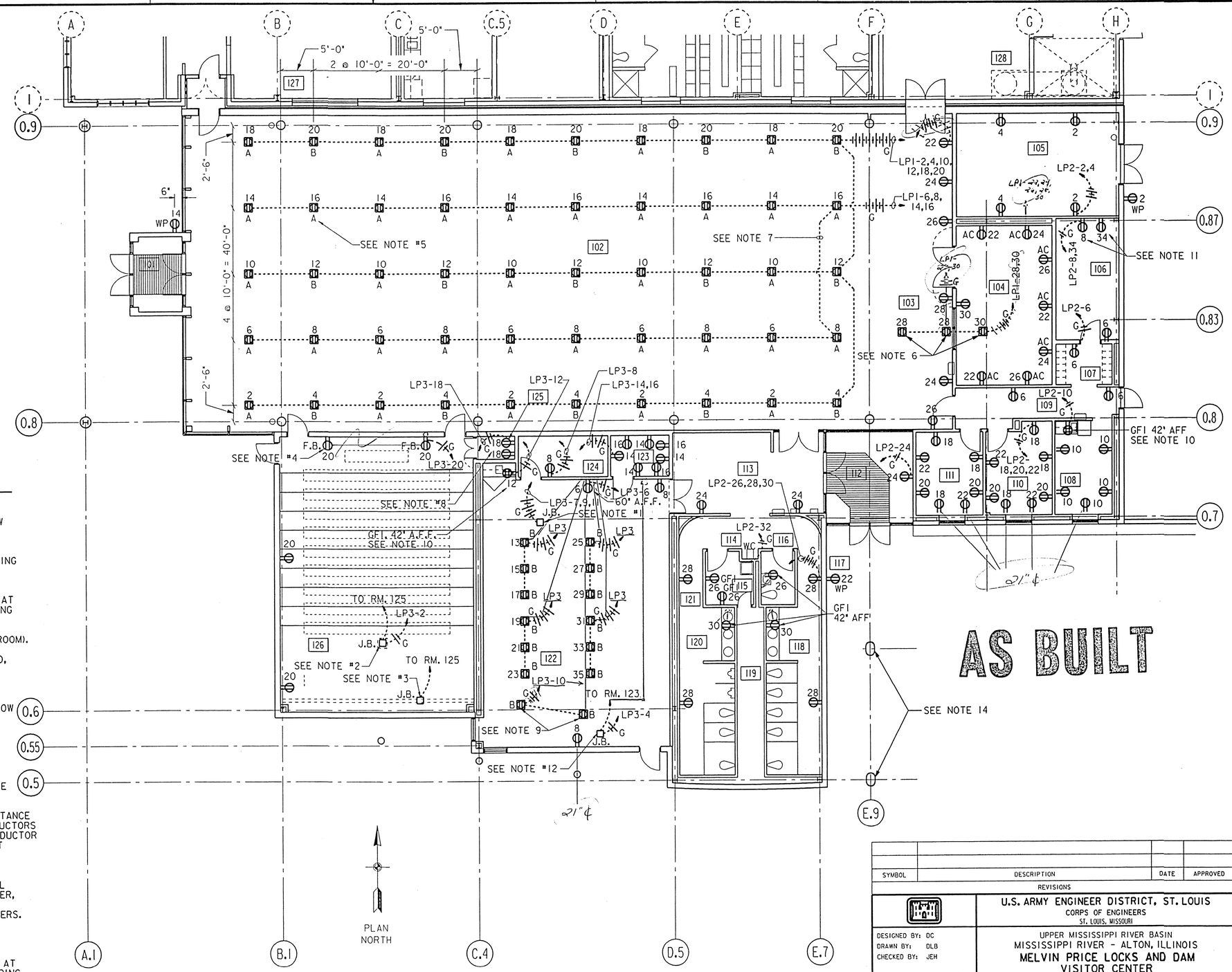

FLOOR PLAN

1/8" = 1'-0"

SYMBOL	DESCRIPTION	DATE	APPROVED

REVISIONS

U.S. ARMY ENGINEER DISTRICT, ST. LOUIS
CORPS OF ENGINEERS
ST. LOUIS, MISSOURI

DESIGNED BY: DC
DRAWN BY: DLB
CHECKED BY: JEH
DATE: NOVEMBER, 1996

UPPER MISSISSIPPI RIVER BASIN
MISSISSIPPI RIVER - ALTON, ILLINOIS
MELVIN PRICE LOCKS AND DAM
VISITOR CENTER
ELECTRICAL

POWER PLAN

SUBMITTED: DESIGN ENGINEER
SUBMITTED: GARY M. JONES, CHIEF, MECH/ELEC. SECTION
APPROVED: BOBBY R. HUGHEY, CHIEF, DESIGN BRANCH

SIZE: D | DWG. CODE: DACW 43 | DRAWING NO. M-MP-2/E-6

DESIGN FILE: n:\melprice\visitor\mpvce006.dgn | PLOT DATE: 15-OCT-1996 06:17
PLOT SCALE: 8:1 | SOL. NO. DACW43-97-B-0204 | FILE NO.

CMT
CRAWFORD, MURPHY & TILLY, INC.

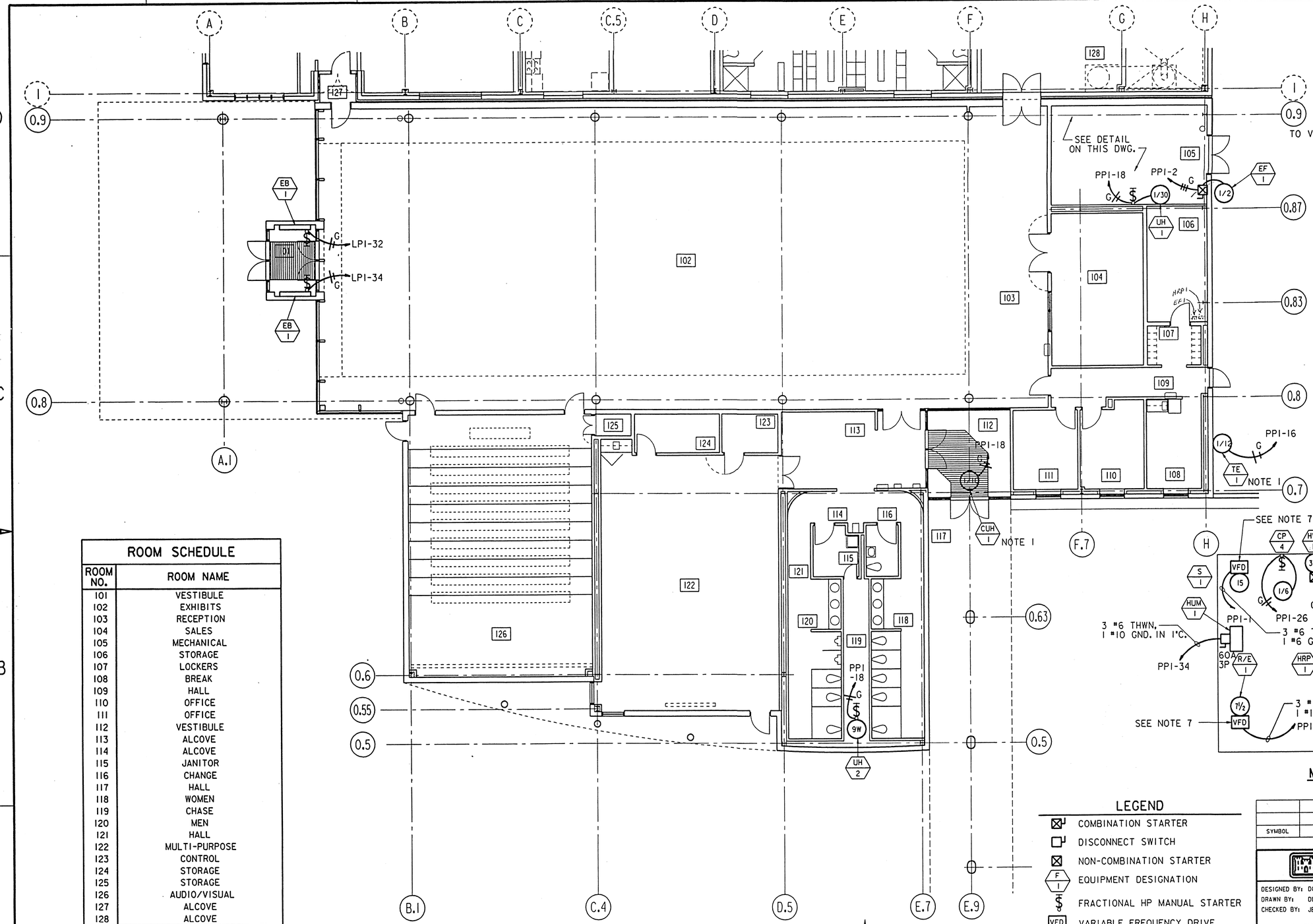

NOTES

1.) ROUTE POWER CIRCUIT FROM DEVICE TO ROOM 105 - MECHANICAL TO WALL MOUNTED FRACTIONAL HORSEPOWER MANUAL STARTER. PROVIDE AND INSTALL STARTER AND MAKE ALL FINAL ELECTRICAL CONNECTIONS.

2.) REDUCED VOLTAGE STARTER SUPPLIED AND INSTALLED BY OTHERS. PROVIDE ALL FINAL CONNECTIONS.

3.) PROVIDE FUSE SIZE AS RECOMMENDED BY UNIT MANUFACTURER. DISCONNECT ENCLOSURE TO BE NEMA 3R.

4.) COORDINATE LOCATIONS OF ELECTRICAL DEVICES, BOXES AND CONDUITS WITH MECHANICAL AND ALL OTHER TRADES TO AVOID CONFLICTS.

5.) SEE EQUIPMENT/MOTOR CONTROL SCHEDULES, DWG. E-11.

6.) SEE MECHANICAL DRAWINGS FOR EXACT LOCATIONS OF MECHANICAL EQUIPMENT.

7.) VFD TO BE ABB TYPE ACH 500, OR EQUAL.

ROOM SCHEDULE

ROOM NO.	ROOM NAME
101	VESTIBULE
102	EXHIBITS
103	RECEPTION
104	SALES
105	MECHANICAL
106	STORAGE
107	LOCKERS
108	BREAK
109	HALL
110	OFFICE
111	OFFICE
112	VESTIBULE
113	ALCOVE
114	ALCOVE
115	JANITOR
116	CHANGE
117	HALL
118	WOMEN
119	CHASE
120	MEN
121	HALL
122	MULTI-PURPOSE
123	CONTROL
124	STORAGE
125	STORAGE
126	AUDIO/VISUAL
127	ALCOVE
128	ALCOVE

LEGEND

- COMBINATION STARTER
- DISCONNECT SWITCH
- NON-COMBINATION STARTER
- EQUIPMENT DESIGNATION
- FRACTIONAL HP MANUAL STARTER
- VFD VARIABLE FREQUENCY DRIVE

FLOOR PLAN

1/8" = 1'-0"

12"0 5' 10' 15'

PLAN NORTH

MECHANICAL ROOM 105 - DETAIL

N.T.S.

AS BUILT

SYMBOL	DESCRIPTION	DATE	APPROVED

REVISIONS

CMT CRAWFORD, MURPHY & TILLY, INC.

U.S. ARMY ENGINEER DISTRICT, ST. LOUIS
CORPS OF ENGINEERS
ST. LOUIS, MISSOURI

DESIGNED BY: DC
DRAWN BY: DLB
CHECKED BY: JEH
DATE: NOVEMBER, 1996

UPPER MISSISSIPPI RIVER BASIN
MISSISSIPPI RIVER - ALTON, ILLINOIS
MELVIN PRICE LOCKS AND DAM
VISITOR CENTER
ELECTRICAL

MECHANICAL EQUIPMENT PLAN

SUBMITTED: DESIGN ENGINEER
SUBMITTED: GARY M. JONES, CHIEF, MECH/ELEC. SECTION
APPROVED: BOBBY R. HUGHEY, CHIEF, DESIGN BRANCH

SIZE D | DWG. CODE DACW 43 | DRAWING NO. M-MP-2/E-7

DESIGN FILE: n:\melprice\visitor\mpvce007.dgn | PLOT DATE: 15-OCT-1996 06:19
PLOT SCALE: 8:1 | SOL. NO. DACW43-97-B-0204 | FILE NO.

EQUIPMENT/MOTOR CONTROL SCHEDULE

DESIGNATION	DESCRIPTION	EQUIPMENT LOCATION	HP	VOLTS	PHASE	TYPE	STARTER LOCATION	SIZE	TYPE	AUXILIARY DEVICES LOCATION	AUXILIARY DEVICES REMARKS
ACC-1	CHILLER	PAD MOUNT	287 MCA	208	3	3	ON UNIT	SIZE 5	DISC	AT UNIT	NEMA 3R ENCLOSURE
CHWP-1A	CHILLED WATER PUMP	RM 105	3	208	3	2	AT UNIT	SIZE 1	HOA PL	STARTER STARTER	SEE NOTE 2
CHWP-1B	CHILLED WATER PUMP	RM 105	3	208	3	2	AT UNIT	SIZE 1	HOA PL	STARTER STARTER	
CP-1	CIRC. PUMP	RM 105	1/4	120	1	1	AT UNIT		HOA PL	STARTER STARTER	
CP-2	CIRC. PUMP	RM 105	1/3	120	1	1	AT UNIT		HOA PL	STARTER STARTER	
CP-3	CIRC. PUMP	RM 105	1/12	120	1	1	AT UNIT		HOA PL	STARTER STARTER	
CP-4	CIRC. PUMP	RM 105	1/6	120	1	1	AT UNIT		HOA PL	STARTER STARTER	
CUH-1	CABINET UNIT HEATER	RM 112	1/10	120	1	1	RM 105 WALL MOUNT		HOA PL	STARTER STARTER	
EB-1	BASEBOARD HEATER	RM 101	2 KW	120	1	1	RM 101 WALL MOUNT		PL	STARTER	
EF-1	EXHAUST FAN	RM 105	1/2	208	3	2	AT UNIT	SIZE 0	HOA PL	STARTER STARTER	
F-1	INTAKE FAN	RM 105	1/2	208	3	2	AT UNIT	SIZE 0	HOA NO/NC PL	STARTER STARTER STARTER	
HRP-1	HEAT RECOVERY	RM 105	1/2	208	3	2	AT UNIT	SIZE 0	HOA PL	STARTER STARTER	
HUM-1	HUMIDIFIER	RM 105	55 MCA	208	3				DISC	AT UNIT	
HWP-1A	HOT WATER PUMP	RM 105	3/4	208	3	2	AT UNIT	SIZE 0	HOA PL	STARTER STARTER	
HWP-1B	HOT WATER PUMP	RM 105	3/4	208	3	2	AT UNIT	SIZE 0	HOA PL	STARTER STARTER	
R/E-1	RETURN/EXHAUST FAN	RM 105	7 1/2	208	3	4	RM 105 WALL MOUNT	SIZE 2			
S-1	SUPPLY FAN	RM 105	15	208	3	4	RM 105 WALL MOUNT	SIZE 3			
TE-1	TOILET EXHAUST FAN	RM 122	1/12	120	1	1	RM 105 WALL MOUNT		HOA PL	STARTER STARTER	
UH-1	UNIT HEATER	RM 105	1/50	120	1	1	AT UNIT		HOA PL	STARTER STARTER	
UH-2	UNIT HEATER	RM 119	9W	120	1	1	AT UNIT		HOA PL	STARTER STARTER	

AS BUILT

EQUIPMENT/MOTOR CONTROL

1.) ALL ENCLOSURES SHALL BE NEMA 1, UNLESS OTHERWISE NOTED.

2.) ALL HVAC CONTROL CIRCUITS TO BE 24 VAC. ALL DEVICES SHOWN ON THIS SCHEDULE REQUIRING AUTOMATIC CONTROLS SHALL BE PROVIDED WITH 24V CONTROL COIL OR CONTROL POWER TRANSFORMER.

3.) FINAL ELECTRICAL CONNECTIONS TO ALL MECHANICAL EQUIPMENT TO BE MADE WITH LIQUID TIGHT FLEXIBLE CONDUIT UNLESS NOTED OTHERWISE. CONTRACTOR SHALL VERIFY ALL CONNECTION REQUIREMENTS WITH APPROVED MANUFACTURER'S DATA PRIOR TO ROUGHING IN OF EQUIPMENT ELECTRICAL CONNECTIONS. CONTRACTOR SHALL FURNISH AND INSTALL ALL WIRING AS REQUIRED BY THE RESPECTIVE EQUIPMENT MANUFACTURER AND IN CONFORMANCE WITH NEC AND AS DETAILED HERE IN.

4.) PROVIDE AUXILIARY CONTACTS AS REQUIRED FOR FIRE ALARM SHUT DOWN.

STARTER TYPE

1 = FRACTIONAL HORSEPOWER MANUAL

2 = COMBINATION FVNR FUSIBLE DISCONNECT TYPE - FUSES SIZED PER EQUIPMENT MANUFACTURER RECOMMENDATIONS.

3 = STARTER FURNISHED WITH EQUIPMENT

4 = VARIABLE FREQUENCY DRIVE

AUXILIARY DEVICES LEGEND

HOA - HAND-OFF-AUTOMATIC SELECTOR SWITCH

PL - PILOT LIGHT

DISC - DISCONNECT SWITCH

CPT - CONTROL POWER TRANSFORMER

NO/NC - ONE NORMALLY OPEN, ONE NORMALLY CLOSED AUXILIARY CONTACTS

SYMBOL	DESCRIPTION	DATE	APPROVED

REVISIONS

U.S. ARMY ENGINEER DISTRICT, ST. LOUIS
CORPS OF ENGINEERS
ST. LOUIS, MISSOURI

DESIGNED BY: DC
DRAWN BY: DLB
CHECKED BY: JEH
DATE: NOVEMBER, 1996

UPPER MISSISSIPPI RIVER BASIN
MISSISSIPPI RIVER - ALTON, ILLINOIS
MELVIN PRICE LOCKS AND DAM
VISITOR CENTER
ELECTRICAL

EQUIPMENT SCHEDULE

SUBMITTED:
DESIGN ENGINEER

SUBMITTED:
GARY M. JONES
CHIEF, MECH./ELEC. SECTION

APPROVED:
BOBBY R. HUGHEY
CHIEF, DESIGN BRANCH

SIZE	DWG. CODE	DRAWING NO.
D	DACW 43	M-MP-2/E-11

DESIGN FILE: ni\melprice\visitor\mpvce011.dgn | PLOT DATE: 15-OCT-1996 06:27
PLOT SCALE: 8:1 | SOL. NO. DACW43-97-B-0204 | FILE NO.

CMT
CRAWFORD, MURPHY & TILLY, INC.

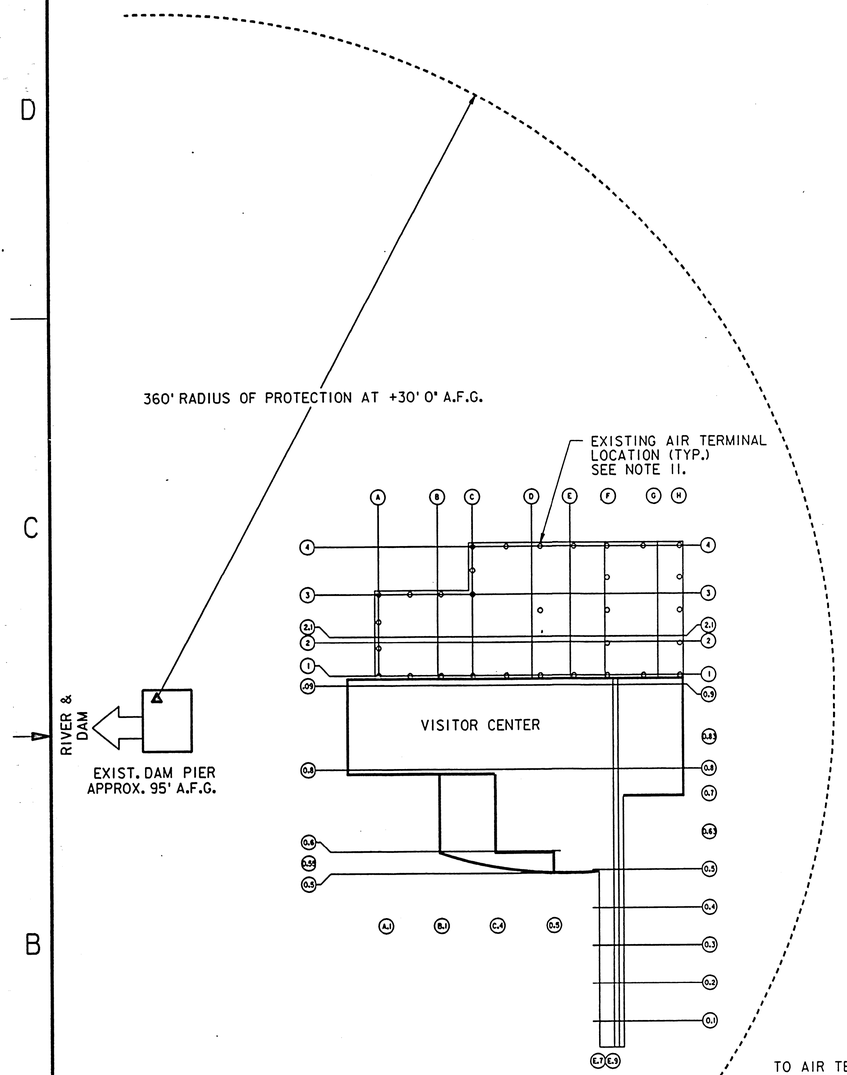

LIGHTNING PROTECTION PLAN

SCALE: 1"= 40' 0" 0 10 20 30 40 60

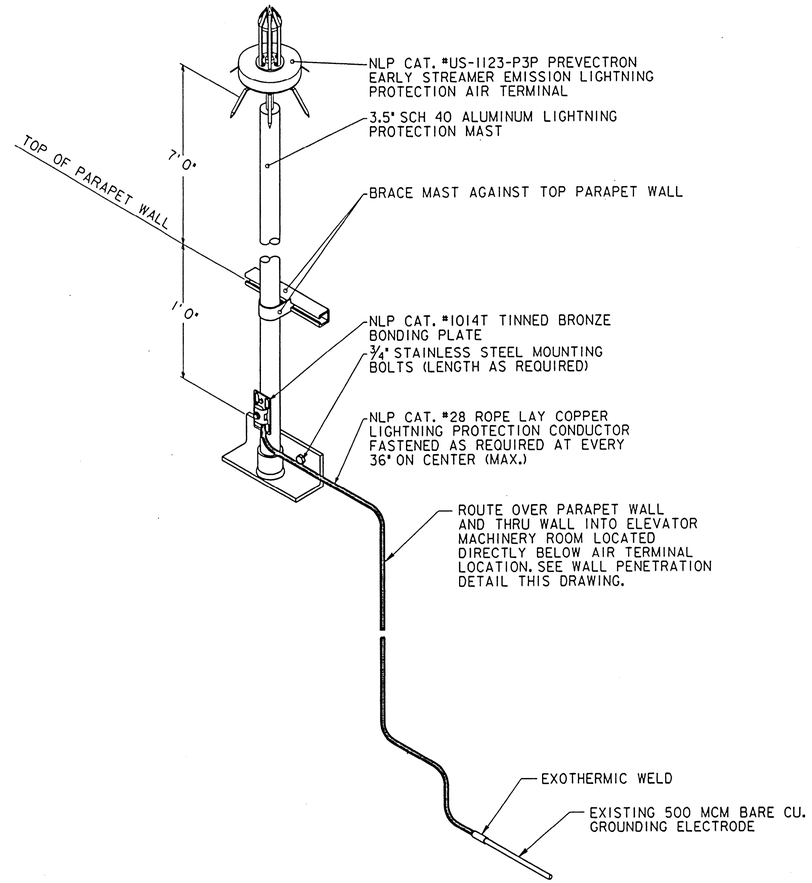

GENERAL INSTALLATION DETAIL

NOT TO SCALE

AS BUILT

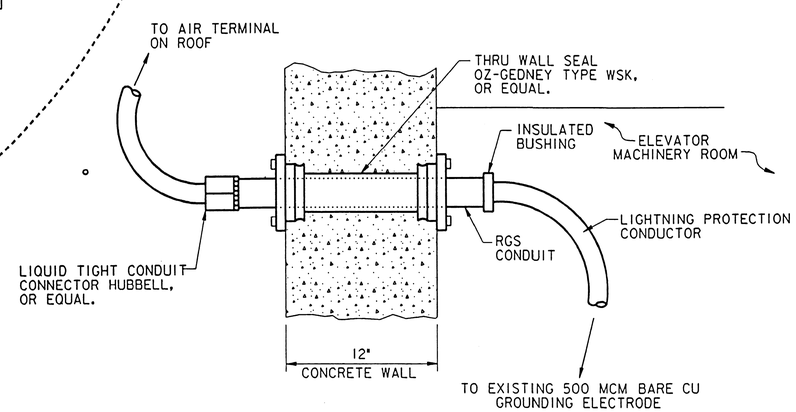

WALL PENETRATION DETAIL

N.T.S.

WALL PENETRATION DETAIL NOTES

1.) LIGHTNING PROTECTION CONDUCTOR MINIMUM BEND RADIUS 8" MAXIMUM BEND ANGLE 90°

2.) THRU WALL SEAL AND CONDUIT SHALL BE SIZED AS REQUIRED BY ACTUAL LIGHTNING PROTECTION CONDUCTOR PROVIDED.

3.) EXACT LOCATION OF AIR TERMINAL AND WALL PENETRATION FOR LIGHTNING PROTECTION CONDUCTOR SHALL BE AS DIRECTED BY CONTRACTING OFFICER.

4.) AT CONTRACTOR'S OPTION A ROOF PENETRATION FOR THE LIGHTNING PROTECTION CONDUCTOR CAN BE USED IF A DETAIL OF THE METHOD OF INSTALLATION IS SUBMITTED TO AND APPROVED BY THE CONTRACTING OFFICER BEFORE COMMENCING WITH INSTALLATION.

GENERAL INSTALLATION NOTES

1. INSTALLATION SHALL CONFORM TO THESE DRAWINGS. ALL ALTERATIONS SHALL BE APPROVED BY DESIGNER BEFORE INSTALLATION.
2. NO BEND OF CONDUCTOR SHALL FORM A FINAL INCLUDED ANGLE OF LESS THAN 90 DEGREES, NOR SHALL HAVE A RADIUS OF BEND LESS THAN 8 INCHES.
3. ALL LIGHTNING PROTECTION CONDUCTORS SHALL BE FASTENED AT A MAXIMUM OF EVERY 36 INCHES ON CENTER.
4. CONNECT LIGHTNING PROTECTION CONDUCTOR TO EXISTING GROUNDING ELECTRODE SYSTEM AT DRAIN PIER.
5. THE COMPLETE LIGHTNING PROTECTION SYSTEM SHALL HAVE NO MORE THAN 10 ohms OF RESISTANCE AS MEASURED BY THE IEEE "FALL OF POTENTIAL METHOD".
6. ALL METAL BODIES OF INDUCTANCE SITUATED WITH IN 15' 0" OF A LIGHTNING PROTECTION CONDUCTOR OR BONDED METAL BODY SHALL BE INTERCONNECTED TO THE LIGHTNING PROTECTION SYSTEM.
7. BOND TO ELECTRICAL GROUND, WATER, AND TELEPHONE GROUND TO MAKE ALL GROUND SYSTEMS COMMON.
8. ALL INCOMING ELECTRICAL, TELEPHONE, DATA COMMUNICATIONS, TELEVISION, & RADIO SERVICES SHALL BE EQUIPPED WITH TRANSIENT VOLTAGE SURGE SUPPRESSION.
9. ALL WORK ON DAM PIER SHALL BE PERFORMED BY INSTALLER OF LIGHTNING PROTECTION SYSTEM.
10. ALL DETAILS, COORDINATION, METHODS, AND MEANS OF INSTALLATION OF THE LIGHTNING PROTECTION SYSTEM SHALL BE SUBMITTED AND APPROVED BEFORE COMMENCING WITH INSTALLATION.
11. ANY ABOVE GRADE COMPONENT OF THE EXISTING LIGHTNING PROTECTION SYSTEM FOR ADMINISTRATION-MAINTENANCE BUILDING THAT IS REQUIRED TOBE REMOVED DURING THE CONSTRUCTION OF THE VISITOR CENTER SHALL BE REMOVED BY ELECTRICAL CONTRACTOR. GROUND FIELD ON SOUTH SIDE OF EXISTING BUILDING SHALL BE REMOVED AS PART OF THE DEMOLITION WORK, SEE E-2 FOR ADDITIONAL INFORMATION. BALANCE OF EXISTING LIGHTNING PROTECTION SYSTEM SHALL REMAIN FUNCTIONAL DURING CONSTRUCTION OF THE VISITOR CENTER.

LEGEND

NLP CAT. #US-1121-P3P EARLY STREAMER EMISSION LIGHTNING PROTECTION AIR TERMINAL

NLP CAT #28 ROPE LAY COPPER LIGHTNING PROTECTION CONDUCTOR

NOTES

1. A PARA 2 2000 PLUS TRANSIENT VOLTAGE SURGE SURPRESSOR (TVSS) SHALL BE INSTALLED ON THE INCOMING ELECTRICAL SERVICE IN THE VISTOR'S CENTER.
2. COORDINATE INSTALLATION OF LIGHTNING PROTECTION DOWNLEADS WITH ALL WINDOWS, DOORS, ETC.
3. LIGHTNING PROTECTION CONDUCTORS THAT ARE EXPOSED TO POTENTIAL DAMAGE SHALL BE PROPERLY PROTECTED.

SYMBOL	DESCRIPTION	DATE	APPROVED

REVISIONS

U.S. ARMY ENGINEER DISTRICT, ST. LOUIS
CORPS OF ENGINEERS
ST. LOUIS, MISSOURI

DESIGNED BY: JEH
DRAWN BY: DLB
CHECKED BY: DC
DATE: NOVEMBER, 1996

UPPER MISSISSIPPI RIVER BASIN
MISSISSIPPI RIVER - ALTON, ILLINOIS
MELVIN PRICE LOCKS AND DAM
VISITOR CENTER
ELECTRICAL

LIGHTNING PROTECTION PLAN

SUBMITTED: DESIGN ENGINEER

SUBMITTED: GARY M. JONES, CHIEF, MECH./ELEC. SECTION

APPROVED: BOBBY R. HUGHEY, CHIEF, DESIGN BRANCH

SIZE: D | DWG. CODE: DACW 43 | DRAWING NO. M-MP-2/E-12

DESIGN FILE: n:\melprice\visitor\mpvce012.dgn | PLOT DATE: 15-OCT-1996 06:30

PLOT SCALE: 480:1 | SOL. NO. DACW43-97-B-0204 | FILE NO.

CMT CRAWFORD, MURPHY & TILLY, INC.

SYMBOLS

- SINGLE PHASE POWER OR CONTROL INTERLOCK WIRING (BY MECH.CONTRACTOR)
- G — 24 VOLT CONTROL WIRING (BY MECH. CONTRACTOR)
- 3 PHASE POWER WIRING (BY ELECT. CONTRACTOR)
- V — AIR ELIMINATOR
- AIR FILTER
- BACK FLOW PREVENTER
- BALANCING VALVE OR CIRCUIT SETTER
- BALANCING COCK
- BALL VALVE
- BUTTERFLY VALVE
- CABINET UNIT HEATER
- CHECK VALVE
- CHWR — CHILLED WATER RETURN
- CHWS — CHILLED WATER SUPPLY
- CW — COLD WATER
- D — DRAIN
- DN — DUCT DOWN
- DSD — DUCT SMOKE DETECTOR
- HD — DUCT HEAT DETECTOR
- DUCTED AIRFLOW
- EXHAUST FAN
- EXPANSION/COMPRESSION TANK
- FAN COIL UNIT
- FAN
- FILL VALVE
- FINNED TUBE
- FD FD — FIRE DAMPER
- FLEXIBLE DUCT CONNECTION
- FLEXIBLE PIPE CONNECTION
- FS — FREEZE STAT
- G — GAS
- GAS COCK
- GATE VALVE
- GLOBE VALVE
- HEAT EXCHANGER OR COIL
- H — HIGH GAS PRESSURE SWITCH
- HWR — HOT WA
- HWS — HOT WATER SUPPLY
- H — HUMIDISTAT/HUMIDITY SENSOR
- HC — HUMIDITY CONTROLLER
- LOUVER
- L — LOW GAS PRESSURE SWITCH
- MD MD — MANUAL DAMPER
- MANUAL AIR VENT
- MOTOR STARTER
- M M — MOTORIZED 2-WAY OR 3-WAY VALVE
- M — MOTORIZED OPERATOR
- OPPOSED BLADE DAMPER - ODB
- PARALLEL BLADE DAMPER
- PETE'S PLUG
- PIPE SLEEVE
- PLUG VALVE
- PRESSURE REDUCING VALVE
- PRESSURE RELIEF VALVE
- P — PRESSURE GAGE
- PROGRAMMABLE CONTROLLER INPUT/OUTPUT
- PUMP
- REDUCER OR INCREASER - CONCENTRIC OR ECCENTRIC
- REHEAT COIL
- RETURN OR EXHAUST RISER
- S — SOLENOID VALVE
- SPLITTER DAMPER
- SPC — STATIC PRESSURE CONTROLLER
- STRAINER
- SUPPLY RISER
- TC — TEMPERATURE CONTROLLER
- THERMOMETER
- T — THERMOSTAT/TEMPERATURE SENSOR
- TURNING VANES
- UNDUCTED AIRFLOW
- UNION
- UNIT HEATER
- V — VENT
- VD — VOLUME DAMPER

ABBREVIATIONS

AD	ACCESS DOOR	GA	GAGE OR GAUGE	VD	VOLUME DAMPER
AFF	ABOVE FINISHED FLOOR	GPM	GALLONS PER MINUTE	VFD	VARIABLE FREQUENCY DRIVE
AHU	AIR HANDLING UNIT	GR	GRILLE	VIB ISOL	VIBRATION ISOLATOR
AI	ANALOG INPUT	HC	HEATING COIL	VTR	VENT THRU ROOF
AO	ANALOG OUTPUT	HRC	HEAT RECOVERY COIL	WC	WATER COLUMN
APD	AIR PRESSURE DROP	HRP	HEAT RECOVERY PUMP	WP	WEATHER PROOF
BDD	BACKDRAFT DAMPER	HW	HOT WATER	WPD	WATER (FLUID) PRESSURE DROP
BI	BINARY INPUT	HWB	HOT WATER BOILER		
BO	BINARY OUTPUT	HWP	HOT WATER PUMP		
BOD	BOTTOM OF DUCT	HU	HUMIDIFIER		
BTU	BRITISH THERMAL UNIT PER HOUR	ID	INSIDE DIAMETER		
CC	COOLING COIL	INSUL.	INSULATION		
CD	CEILING DIFFUSER	LAT	LEAVING AIR TEMPERATURE		
CFH	CUBIC FEET PER HOUR	LDB	LEAVING DRY BULB		
CFM	CUBIC FEET PER MINUTE	LWT	LEAVING WATER (FLUID) TEMPERATURE		
CHW	CHILLED WATER	MAD	MIXED AIR DAMPER		
CHWP	CHILLED WATER PUMP	MAT	MIXED AIR TEMPERATURE		
CLG	CEILING	MBH	THOUSAND BRITISH THERMAL UNITS PER HOUR		
COND	CONDENSER/CONDENSATE	MD	MANUAL DAMPER		
CP	CIRCULATING PUMP	NC	NORMALLY CLOSED		
CUH	CABINET UNIT HEATER	NK	NECK		
Cv	FLOW COEFFICIENT	NO	NORMALLY OPEN		
CV	CONTROL VALVE	OA	OUTSIDE AIR		
CW	COLD WATER	OAD	OUTSIDE AIR DAMPER		
DHW	DOMESTIC HOT WATER	OAI	OUTSIDE AIR INTAKE		
DHWP	DOMESTIC HOT WATER PUMP	OAL	OUTSIDE AIR LOUVER		
DIA	DIAMETER	OED	OUTSIDE AIR ECONOMIZER DAMPER		
DIFF	DIFFUSER	PD	PRESSURE DROP		
DN	DOWN	PDS	PRESSURE DIFFERENTIAL SWITCH		
DW	DOUBLE WALLED	PHC	PREHEAT COIL		
DWH	DOMESTIC WATER HEATER	PRV	PRESSURE REDUCING VALVE		
DWP	DOMESTIC WATER PUMP	R/E	RETURN/EXHAUST		
E	EXHAUST	RA	RETURN AIR		
EA	EXHAUST AIR	REQD	REQUIRED		
EAD	EXHAUST AIR DAMPER	RH	RELATIVE HUMIDITY		
EAL	EXHAUST AIR LOUVER	RHC	REHEAT COIL		
EAT	ENTERING AIR TEMPERATURE	RPM	ROTATIONS PER MINUTE		
EB	ELECTRIC BASEBOARD RADIATOR	RPZ	REDUCED PRESSURE ZONE		
EDB	ENTERING DRY BULB	RR	RETURN REGISTER		
EDR	EQUIVALENT DIRECT RADIATION		SUPPLY		
EED	ECONOMIZER EXHAUST DAMPER	SA	SUPPLY AIR		
EF	EXHAUST FAN	SD	SPLITTER DAMPER		
EG	EXHAUST GRILLE	SPC	STATIC PRESSURE CONTROL		
EL./ELEV.	ELEVATION	SV	SOLENOID VALVE		
EMS	ENERGY MANAGEMENT SYSTEM	TE	TOILET EXHAUST		
ESP	EXTERNAL STATIC PRESSURE	TS	TIP SPEED		
EWT	ENTERING WATER (FLUID) TEMPERATURE	TSP	TOTAL STATIC PRESSURE		
FD	FIRE DAMPER	TYP	TYPICAL		
FLEX	FLEXIBLE	UD	UNDERCUT DOOR		
FPI	FINS PER INCH	UH	UNIT HEATER		
FT	FINNED TUBE RADIATOR	VAV	VARIABLE AIR VOLUME		

GENERAL NOTES

1.) ALL WORK SHALL BE PERFORMED IN STRICT ACCORDANCE WITH THE LATEST CODES AND INDUSTRY STANDARDS, AS WELL AS THE LATEST OSHA AND STATE OF ILLINOIS REQUIREMENTS.

2.) CONTRACTOR SHALL COORDINATE WORK WITH OTHER TRADES AND INSTALL ALL EQUIPMENT, DUCTWORK, AND PIPING TO AVOID INTERFERENCE WITH STRUCTURAL MEMBERS AND EQUIPMENT.

3.) DRAWINGS ARE TO BE USED IN CONJUNCTION WITH THE PROJECT SPECIFICATIONS AND OTHER RELATED DRAWINGS.

4.) ALL PIPING AND DUCT LAYOUTS ARE APPROXIMATE AND SHOULD BE COORDINATED TO AVOID FIELD INTERFERENCES.

5.) ALL DUCTWORK AND PIPING SHALL BE INSTALLED IN A NEAT WORKMANLIKE MANNER, AND RUN PARALLEL OR PERPENDICULAR TO WALLS, CEILINGS, AND FLOORS.

6.) DUCTWORK SIZES MAY BE MODIFIED TO SUIT SITE CONDITIONS AS LONG AS DUCT CROSS SECTIONAL AREA IS NOT REDUCED. ALL OFFSETS AND TRANSITIONS REQUIRED TO AVOID INTERFERENCES SHALL MAINTAIN SAME DUCT CROSS SECTIONAL AREAS AS INLET.

7.) ALL DUCT DIMENSIONS SHOWN ON DRAWINGS ARE INTERNAL DIMENSIONS REPRESENTING THE DUCT FREE AREA DIMENSIONS.

8.) REFER TO ARCHITECTURAL AND STRUCTURAL DRAWINGS AND/OR CONSULT ARCHITECT/ ENGINEER PRIOR TO ROUGH-IN FOR MECHANICAL WORK TO AVOID FIELD CONFLICTS.

9.) ALL MATERIALS AND EQUIPMENT USED ON THIS PROJECT SHALL BE NEW. NEW EQUIPMENT SHALL BE U.L. APPROVED AS APPLICABLE.

10.) ALL HVAC DUCTWORK AND ACCESSORIES SHALL BE DESIGNED AND INSTALLED IN ACCORDANCE WITH SMACNA HVAC DUCT CONSTRUCTION STANDARDS FOR MEDIUM PRESSURE DUCTWORK, AND APPLICABLE SPECIFICATION SECTIONS.

11.) ALL HVAC DUCTWORK, ACCESSORIES AND MATERIALS SHALL BE INSTALLED IN ACCORDANCE WITH THE APPLICABLE SPECIFICATION SECTIONS AND MANUFACTURERS RECOMMENDATIONS.

12.) HVAC DUCTWORK SHALL BE INSULATED AS SPECIFIED IN ACCORDANCE WITH THE REQUIREMENTS OF SPECIFICATION SECTIONS 15250 AND AS OUTLINED BELOW:

A) INSULATE ALL OUTSIDE AIR INTAKE DUCTS.

B) INSULATE SUPPLY AND RETURN AIR DUCTS FOR HEATING, VENTILATING, AND AIR CONDITIONING EQUIPMENT, UNLESS NOTED OTHERWISE.

13.) INSULATE ALL HOT WATER, COLD WATER, AND CHILLED WATER PIPING IN ACCORDANCE WITH SPECIFICATION SECTION 15250.

14.) PROVIDE CONCRETE EQUIPMENT BASES FOR ALL BASE MTD. EQUIPMENT INCLUDING S-1, R/E-1, HWB-1, ACC-1, DWH-1, AS SHOWN ON THE DRAWINGS. BASES SHALL BE A MINIMUM OF 6" HIGH, AND SHALL EXTEND A MINIMUM OF 6" AROUND ALL SIDES OF EQUIPMENT. MATERIALS SHALL BE AS FOLLOWS:

CONCRETE: PORTLAND CEMENT MIX 4,000 PSI
CEMENT: ASTM C150, TYPE I
FINE AGGREGATE: ASTM C33, CRUSHED GRAVEL

REINFORCEMENT: STEEL BAR CONFORMING TO THE FOLLOWING:
REINFORCEMENT BARS: ASTM A615, GRADE 60, DEFORMED, #4, 12" ON CENTER EACH DIRECTION, MIDDEPTH OF SLAB.

15.) ALL THERMOSTATS & HUMIDISTATS SHALL BE PROVIDED BY MECHANICAL CONTRACTOR, FIELD LOCATED, AND SHALL BE MOUNTED APPROXIMATELY 54" AFF.

16.) ALL OUTDOOR AIR INTAKES FOR VENTILATION SHALL BE LOCATED TO MAINTAIN A MINIMUM 15' CLEARANCE FROM ALL EXHAUST AND FLUE OPENINGS.

17.) ALL DUCTWORK PROVIDED SHALL BE SHEET METAL, UNLESS NOTED OTHERWISE.

18.) ALL FLEXIBLE DUCT LENGTHS SHALL NOT EXCEED 6' IN LENGTH.

19.) PROVIDE LOCK-TYPE. BALANCING DAMPERS AS SHOWN, AND AS REQUIRED FOR PROPER SYSTEM BALANCING.

20.) NAME BRAND. WHEN ARTICLES ARE REFERRED TO ON THE CONTRACT DRAWINGS OR IN THE SPECIFICATIONS AS ANY PARTICULAR MANUFACTURER'S PRODUCT, SUCH REFERENCES HAVE BEEN MADE MERELY AS A CONVENIENT METHOD OF INDICATING THE TYPE OF MATERIAL OR EQUIPMENT REQUIRED, WITH NO INTENTION OF ASSERTING SUPERIORITY THEREOF. THE STANDARD PRODUCT OF ANY REPUTABLE MANUFACTURER REGULARLY ENGAGED IN THE COMMERCIAL PRODUCTION OF THE TYPE AND QUALITY OF MATERIAL OR EQUIPMENT REFERRED TO WILL NOT BE EXCLUDED ON THE BASIS OF MINOR DIFFERENCES, PROVIDED ALL ESSENTIAL REQUIREMENTS OF THE SPECIFICATIONS RELATIVE TO MATERIALS, CAPACITY, AND PERFORMANCE ARE MET.

E-1D
E-2D
E-1A

SYMBOL	DESCRIPTION	DATE	APPROVED

REVISIONS

U.S. ARMY ENGINEER DISTRICT, ST. LOUIS
CORPS OF ENGINEERS
ST. LOUIS, MISSOURI

DESIGNED BY: RJ/SS
DRAWN BY: DLB
CHECKED BY:
DATE: NOVEMBER, 1996

UPPER MISSISSIPPI RIVER BASIN
MISSISSIPPI RIVER - ALTON, ILLINOIS
MELVIN PRICE LOCKS AND DAM
VISITOR CENTER
MECHANICAL

HVAC LEGEND AND SYMBOLS

SUBMITTED: DESIGN ENGINEER

SUBMITTED: GARY M. JONES, CHIEF, MECH./ELEC. SECTION

APPROVED: BOBBY R. HUCHEY, CHIEF, DESIGN BRANCH

SIZE: D | DWG. CODE: DACW 43 | DRAWING NO. M-MP-2/M-1

DESIGN FILE: n:\melprice\visitor\mpvcm001.dgn | PLOT DATE: 10-OCT-1996 11:01

PLOT SCALE: 8:1 | SOL. NO. DACW43-97-B-0204 | FILE NO.

CMT
CRAWFORD, MURPHY & TILLY, INC.

VARIABLE AIR VOLUME UNIT SCHEDULE

UNIT ID	MAX CFM	MIN CFM	REHEAT COIL DATA AIR ENT.	AIR LVG.	HOT WATER EWT	GPM	ROWS	MBH CAP.	MIN. Ps IN. WC	MAX PD FT.	BASED ON: MFR.	MODEL	SIZE	NOTES
VAV-1	2580	1030	55	75	180	2	1	56.8	0.343	0.29	TITUS	AES	16	
VAV-2	2500	1250	55	75	180	2	1	56.4	0.323	0.29	TITUS	AES	16	
VAV-3	1600	800	55	75	180	1	1	33.0	0.197	0.19	TITUS	AES	14	
VAV-4	2580	1030	55	75	180	2	1	56.8	0.343	0.29	TITUS	AES	16	
VAV-5	2400	1000	55	75	180	2	1	53.3	0.298	0.26	TITUS	AES	16	
VAV-6	2700	1100	55	75	180	2	1	57.6	0.17	0.26	TITUS	AES	24x16	
VAV-7	775	300	55	75	180	1	1	21.0	0.247	0.15	TITUS	AES	9	
VAV-8	825	825	55	75	180	1	1	20.8	0.232	0.04	TITUS	AES	9	
VAV-9	225	100	55	75	180	0.5	1	8.55	0.057	0.17	TITUS	AES	4	

NOTE: PROVIDE LEFT-HAND CONTROL ENCLOSURE FOR VAV-2, 5, 8 AND 9.
PROVIDE RIGHT-HAND CONTROL ENCLOSURE FOR VAV-1, 3, 4, 6 AND 7.

PUMP SCHEDULE

UNIT ID	SERVICE	FLOW GPM	HEAD FT	TYPE	HP	RPM	VOLT	BASED ON MFR./MOD.
HWP-1A	HW PRIMARY	62	26	IN-LINE	3/4	1750	208 3ø	B&G SERIES 60 2AA
HWP-1B	HW STANDBY	62	26	IN-LINE	3/4	1750	208 3ø	B&G SERIES 60 2AA
CHWP-1A	CHW PRIMARY	172	28	IN-LINE	1.5	1750	208 3ø	B&G SERIES 80 3x3x9 1/2B
CHWP-1B	CHW STANDBY	172	28	IN-LINE	1.5	1750	208 3ø	B&G SERIES 80 3x3x9 1/2B
CP-1	HW RADIANT HTG CIRC.	12	14	IN-LINE	1/4	1750	120 1ø	B&G SERIES 60 1AA
CP-2	HW REHEAT COIL CIRC.	43	12	IN-LINE	1/3	1750	120 1ø	B&G SERIES 60 1 1/4" AA
CP-3	HW SLAB HTG RECIRC	11	4.8	IN-LINE	1/12	1750	120 1ø	B&G SERIES 100 3/4"
CP-4	HC-1 CIRC.	29.5	9	IN-LINE	1/4	1750	120 1ø	B&G SERIES 60 3/4"
HRP-1	HEAT RECOVERY	50	20	IN-LINE	3/4	1150	208 3ø	B&G SERIES 80 2 X 2 X 7

DAMPER SCHEDULE

UNIT ID	SERVICE	TYPE	SIZE	CFM MIN.	CFM MAX.	NORMAL POSITION	BASED ON MFR	BASED ON MOD
OED	PHC-1	PBD	12x48	0	10,000	CLOSED	GREENHECK	VCD-23
EED	HRC-1	PBD	12x48	0	9,175	CLOSED	GREENHECK	VCD-23

UNIT HEATER SCHEDULE

UNIT ID	QTY	LOCATION/ ROOM	TYPE	CAP MBH	EWT	EAT	LAT	GPM	CFM	FAN HP	FAN POWER	BASED ON MFR./MOD.	NOTES
UH-1	1	MECH. ROOM	HW	29.8	180	60	103	3.5	750	1/30	115V/1Ø	VULCAN HV-48	MTD. @ 8'-0" A.F.F.
UH-2	1	PIPE CHASE	HW	14.9	180	60	103	1.8	450	9W	115V/1Ø	VULCAN HV-24	MTD. @ 7'-0" A.F.F.
CUH-1	1	VESTIBULE	HW	14.1	180	60	100	1.7	230/ 170	1/10	115V/1Ø	VULCAN RC-1200-02	RECESS CEILING MOUNTED

HUMIDIFIER SCHEDULE

UNIT ID	DESCRIPTION	CAP LB/HR	ELECTRICAL DATA KW	AMPS	VOLTAGE	CONTROL	BASED ON: MFR	MODEL
HUM-1	ELECTRONIC TYPE STEAM HUMDIFIER	60	20	55.5	208/3ø	PROPORTIONAL	HERRMIDIFIER	MDSP-208360

AIR COOLED CHILLER

UNIT ID	NOM. CAP TONS	FLUID	EVAPORATOR EWT F	LWT F	GPM	WPD	ELECTRICAL DATA COND. EAT	MAX FUSE	RUNNING AMPS	VOLTS	PHASE	HERTZ	BASED ON MANUFACTURER	MODEL
ACC-1	60	30% ETHL GLY	54	44	137	10	95	287	237	208	3	60	DUNHAM BUSH	ACDX-060

HOT WATER HEATING COIL

UNIT ID	SYSTEM	CFM	ROWS	FPI	MAX Ps IN WC	AIR EAT F	AIR LAT F	WATER EWT F	WATER LWT F	WATER FLOW GPM	WATER MAX PD FT	CAPACITY TOTAL MBH	BASED ON: MFR.	MOD	SIZE
HC-1	S-1	10,000	2	8	0.12	26	82.9	180	140	29.5	0.9	612	CARRIER	28NH2238FAAI99A	26LFA

CHILLED WATER COOLING COIL

UNIT ID	SYSTEM	CFM	ROWS	FPI	MAX Ps IN WC	ENT AIR Db F	ENT AIR Wb F	LVG. AIR Db F	LVG. AIR Wb F	WATER EWT F	WATER LWT F	WATER FLOW GPM	WATER MAX PD FT	COOLING CAP. SENSIBLE MBH	COOLING CAP. TOTAL MBH	BASED ON: MFR.	MOD	SIZE
CC-1	S-1	10,000	6	11	0.64	87.6	72.8	53.4	53.4	45	52	172	17.7	366	631	CARRIER	28NC2638DBAI99A	26LFA

HEAT RECOVERY COIL SCHEDULE

UNIT ID	CFM	EDB	LDB	EWT	LWT	GPM	WPD FT-H20	FIN HT	FIN LEN	APD	ROWS	FPT	BASED ON MFR.	BASED ON MOD.	NOTES
HRC-1	5250	75	39.2	32.5	41.3	50	7.1	36	48	0.43	6	9	TEMTROL	5WC8-36.0x48.0x6-9A	30% ETHELENE GLYCOL SOLUTION
PHC-1	6100	2	32.8	41.3	32.5	50	7.9	36	48	0.71	6	14	TEMTROL	5WC8-36.0x48.0x6-14A	

AS BUILT

SYMBOL	DESCRIPTION	DATE	APPROVED

REVISIONS

U.S. ARMY ENGINEER DISTRICT, ST. LOUIS
CORPS OF ENGINEERS
ST. LOUIS, MISSOURI

DESIGNED BY: RJ/SAS
DRAWN BY: DLB
CHECKED BY: RJ/SAS
DATE: NOVEMBER, 1996

UPPER MISSISSIPPI RIVER BASIN
MISSISSIPPI RIVER - ALTON, ILLINOIS
MELVIN PRICE LOCKS AND DAM
VISITOR CENTER
MECHANICAL

HVAC SCHEDULES

SUBMITTED: DESIGN ENGINEER
SUBMITTED: GARY M. JONES, CHIEF, MECH./ELEC. SECTION
APPROVED: BOBBY R. HUGHEY, CHIEF, DESIGN BRANCH

SIZE: D | DWG. CODE: DACW 43 | DRAWING NO. M-MP-2/M-2

DESIGN FILE: ni\melprice\visitor\mpvcm002.dgn | PLOT DATE: 10-OCT-1996 11:03
PLOT SCALE: 8:1 | SOL. NO. DACW43-97-B-0204 | FILE NO.

CMT CRAWFORD, MURPHY & TILLY, INC.

FIN TUBE RADIATION SCHEDULE

UNIT ID	QTY	BTU/FT	GPM	EWT	LWT	TUBE	FINS	FIN LENGTH	COVER LENGTH	ENCLOSURE DEPTH	ENCLOSURE HEIGHT	BASED ON MFR.	BASED ON MOD.	NOTES
FT-1	2	600	0.5	180	160	3/4	48	7	8.5	3-1/2	14	VULCAN	FS214	1,2
FT-2	2	600	0.5	180	160	3/4	48	4	10	3-1/2	14	VULCAN	FS214	1,2
FT-4	1	600	0.5	180	160	3/4	48	16	18'	3-1/2	14	VULCAN	FS214	1,2,3
FT-5	2	600	0.5	180	160	3/4	48	6	7	3-1/2	14	VULCAN	FS214	1,2

NOTES:
1 PROVIDE ACCESS PANEL FOR CONTROL VALVE
2 PROVIDE END TRIM OR END ENCLOSURES AS REQUIRED TO MATCH PLAN
3 PROVIDE INSIDE CORNER

GRILLE & REGISTER SCHEDULE

UNIT ID	TYPE	SIZE	NECK	CFM	Ps (MAX)	NC	FINISH	BASED ON: MFR.	BASED ON: MOD.	NOTES
100	SUPPLY	10"	10"	430	0.13	21	BWE	SEIHO	RHV10	
105	LINEAR SUPPLY	2"	N/A	56/FT	0.01	23	BWE	TITUS	CT480	
106	LINEAR SUPPLY	2"	N/A	44/FT	0.01	17	BWE	TITUS	CT480	
107	LINEAR SUPPLY	2"	N/A	0	--	--	BWE	TITUS	CT480	
110	SUPPLY	24 X 24	9 X 9	400	0.19	30	BWE	TITUS	TDC	4-WAY
120	SUPPLY	24 X 24	6 X 6	125	0.07	13	BWE	TITUS	TDC	2-WAY
130	SUPPLY	24 X 24	6 X 6	125	0.1	19	BWE	TITUS	TDC	4-WAY
140	SUPPLY	8 X 6	8 X 6	200	0.13	23	BWE	TITUS	300R	
150	SUPPLY	24 X 24	9 X 9	400	0.19	30	BWE	TITUS	TDC	4-WAY
160	SUPPLY	24 X 24	9 X 9	450	0.25	34	BWE	TITUS	TDC	4-WAY
170	SUPPLY	24 X 24	9 X 9	225	0.07	15	BWE	TITUS	TDC	4-WAY
200	RETURN	24 X 24	24 X 24	2315	0.09	28	BWE	TITUS	13R	
201	LINEAR RETURN	6"	N/A	260/FT	0.08	32	BWE	TITUS	CT480	
210	RETURN	24 X 14	24 X 14	1200	0.094	20	BWE	TITUS	13RL	
220	RETURN	24 X 14	24 X 14	1350	0.11	23	BWE	TITUS	13RL	
230	RETURN	6 X 6	6 X 6	100	0.09	16	BWE	TITUS	23R	
240	RETURN	6 X 6	6 X 6	125	0.16	27	BWE	TITUS	23R	
250	RETURN	16 X 6	16 X 6	400	0.15	24	BWE	TITUS	13RL	
300	EXHAUST	10 X 8	10 X 8	275	0.16	28	BWE	TITUS	23R	
301	EXHAUST	6 X 6	6 X 6	100	0.09	16	BWE	TITUS	23R	

BWE = BAKED WHITE ENAMEL

AIR HANDLING UNIT SCHEDULE

UNIT ID	CFM	TSP	MOTOR HP	POWER	BASED ON MFR./MOD.	NOTES
S-1	10,000	3.5	10	208/3ø	CARRIER 39NXV263	VERTICAL DRAW THRU SUPPLY FAN
R/E-1	9,175	2.0	7.5	208/3ø	CARRIER 39NA261IRFC3	RETURN FAN

NOTES:
1.) PROVIDE EXHAUST BOX, CARRIER MOD. 39NA26-1EXB11 AND MIXING BOX, CARRIER MOD. 39NA26-1MXB11.

2.) PROVIDE INTERNAL ISOLATION FOR SUPPLY AND RETURN FANS.

3.) PROVIDE STANDARD OA, RA, AND MA DAMPERS FOR MIXING BOX.

4.) PROVIDE REMOTE FAN LUBRICATION FITTINGS.

ELECTRIC BASEBOARD RADIATOR SCHEDULE

UNIT ID	QTY	LOCATION	LEN FT	CAPACITY MBH	INPUT KW	VOLTAGE	MAKE/MODEL
EB-1	2	RM 101	5	6.8	2	120/#	VULCAN/MV3P5

BOILER SCHEDULE

UNIT ID	HWB-1
TYPE	MODULAR/CAST IRON
FUEL	NAT GAS
FIRING RATE MBH/HR	750
BOILER HP	18.46
I=B=R RATING MBH	537
BLOWER MOTOR	NA
HP	NA
VOLTAGE	115
OPERATING WEIGHT (LBS)	1575
WATER CAPACITY GALLONS	21
EDR WATER SQ FT	3580
OVERALL SIZE	5'4" x 3'6"
HEIGHT	5'6"
LOCATION	MECHANICAL ROOM
BASED ON	
MFR.	HYDROTHERM
MOD.	MR750C

FAN SCHEDULE

UNIT ID	QTY	LOCATION	SERVICE	TYPE	CAPACITY CFM @ ESP	MOTOR HP	RPM SPD	BASED ON MAKE/MOD.	NOTES
TE-1	1	S.W. WALL MULTI-PURPOSE	TOILET RM. EXHAUST	WALL EXHAUST	825 CFM @ 0.5 "	1/12 HP	1140 RPM 4160 TS	GREENHECK GW-130-B	1,2
EF-1	1	MECH. ROOM	EXHAUST	WALL EXHAUST	4998 CFM @ 3/8"	3/4 HP	665 RPM 4265 TS	GREENHECK GWB-24-7	1,3
F-1	1	MECH. ROOM	BOILER COMB. AIR	WALL SUPPLY	407 CFM @ 0.2"	1/20 HP	1650 RPM	GREENHECK SI-10-428-P	4,5

NOTES:
1.) PROVIDE WALL COLLAR AND MOTORIZED BACKDRAFT DAMPER.

2.) PROVIDE 7-DAY CLOCK CONTROL FOR OPERATION DURING SCHEDULED OCCUPANCY.

3.) PROVIDE WALL MOUNTED THERMOSTAT IN MECHANICAL ROOM. FAN SHALL OPERATE TO PROVIDE EQUIPMENT COOLING. THERMOSTAT SET TO OPERATE FAN WHEN ROOM TEMPERATURE EXCEEDS 80°F. CONTROLS SHALL BE INTERLOCKED WITH BOILER TO PREVENT FAN OPERATION WHEN BOILER IS FIRED. INTERLOCK WITH LOUVER L-3 DAMPER ACTUATOR.

4.) INTERLOCK WITH BOILER COMBUSTION CONTROLS TO OPERATE WITH BOILER BURNER.

5.) PROVIDE DAMPER GUARD, BACKDRAFT DAMPER AND WALL HOUSING WITH GUARD.

CONTROL VALVE SCHEDULE

UNIT ID	SERVICE EQUIP.	FLOW GPM	SIZE	TYPE	STYLE	CV	BASED ON: MAKE	BASED ON: MODEL	NOTES
SV-1	FT-1	0.5	3/4"	2 WAY	NC	0.9	JCI	J635C0406GA00	
SV-2	FT-1	0.5	3/4"	2 WAY	NC	0.9	JCI	J635C0406GA00	
SV-3	FT-2	0.5	3/4"	2 WAY	NC	0.9	JCI	J635C0406GA00	
SV-4	FT-2	0.5	3/4"	2 WAY	NC	0.9	JCI	J635C0406GA00	
SV-5	FT-3	0.5	3/4"	2 WAY	NC	0.9	JCI	J635C0406GA00	
SV-6	FT-3	0.5	3/4"	2 WAY	NC	0.9	JCI	J635C0406GA00	
SV-7	FT-4	0.5	3/4"	2 WAY	NC	0.9	JCI	J635C0406GA00	
SV-8	FT-5	0.5	3/4"	2 WAY	NC	0.9	JCI	J635C0406GA00	
SV-9	FT-5	0.5	3/4"	2 WAY	NC	0.9	JCI	J635C0406GA00	
SV-10	RHC-9	0.5	3/4"	2 WAY	NC	0.9	JCI	J635C0406GA00	
SV-11	RHC-7	1	3/4"	2 WAY	NC	0.9	JCI	J635C0406GA00	
SV-12	RHC-4	2	3/4"	2 WAY	NC	2.3	JCI	J635C0407GA00	
SV-13	RHC-8	0.5	3/4"	2 WAY	NC	0.9	JCI	J635C0406GA00	
SV-14	RHC-6	2	3/4"	2 WAY	NC	2.3	JCI	J635C0407GA00	
SV-15	RHC-5	2	3/4"	2 WAY	NC	2.3	JCI	J635C0407GA00	
SV-16	RHC-3	1	3/4"	2 WAY	NC	0.9	JCI	J635C0406GA00	
SV-17	RHC-1	2	3/4"	2 WAY	NC	2.3	JCI	J635C0407GA00	
SV-18	RHC-2	2	3/4"	2 WAY	NC	2.3	JCI	J635C0407GA00	
CV-1	HC-1	29.5	1"	2 WAY	NO	13	JCI	VB3974	WITH VA805X ACTUATOR
CV-2	CC-1	137	2 1/2"	3 WAY	MIX	47	JCI	VB4322-9	WITH M150 ACTUATOR
CV-3	HRC-1	50	1 1/2"	3 WAY	MIX	23	JCI	VB4324-6	WITH VA805X ACTUATOR
CV-4	SLAB HTG	11	3/4"	3 WAY	MIX	6.5	JCI	VB3754-4	WITH VA8050 ACTUATOR

WALL LOUVER SCHEDULE

UNIT ID	DUCT DIM	FREE AREA	CFM	ΔP MAX	BASED ON MFR	BASED ON MODEL
L-1	48x48	8.4	9331	0.1	GREENHECK	ESD403
L-2	48x48	8.4	9331	0.1	GREENHECK	ESD403
L-3	28x48	4.07	4926	0.125	GREENHECK	ESD403

NOTE:
PROVIDE KYNAR FINISH. COLOR SELECTION BY CONTRACTING OFFICER.

AS BUILT

SYMBOL	DESCRIPTION	DATE	APPROVED

REVISIONS

U.S. ARMY ENGINEER DISTRICT, ST. LOUIS
CORPS OF ENGINEERS
ST. LOUIS, MISSOURI

DESIGNED BY: RJ/SAS
DRAWN BY: DLB
CHECKED BY:
DATE: NOVEMBER, 1996
SUBMITTED:
DESIGN ENGINEER
SUBMITTED:
GARY M. JONES
CHIEF, MECH./ELEC. SECTION
APPROVED:
BOBBY R. MUCHEY
CHIEF, DESIGN BRANCH

UPPER MISSISSIPPI RIVER BASIN
MISSISSIPPI RIVER - ALTON, ILLINOIS
MELVIN PRICE LOCKS AND DAM
VISITOR CENTER
MECHANICAL

HVAC SCHEDULES

SIZE: D | DWG. CODE: DACW 43 | DRAWING NO. M-MP-2/M-3
DESIGN FILE: n:\melprice\visitor\mpvcm003.dgn | PLOT DATE: 10-OCT-1996 11:05
PLOT SCALE: 8:1 | SOL. NO. DACW43-97-B-0204 | FILE NO.

CMT
CRAWFORD, MURPHY & TILLY, INC.

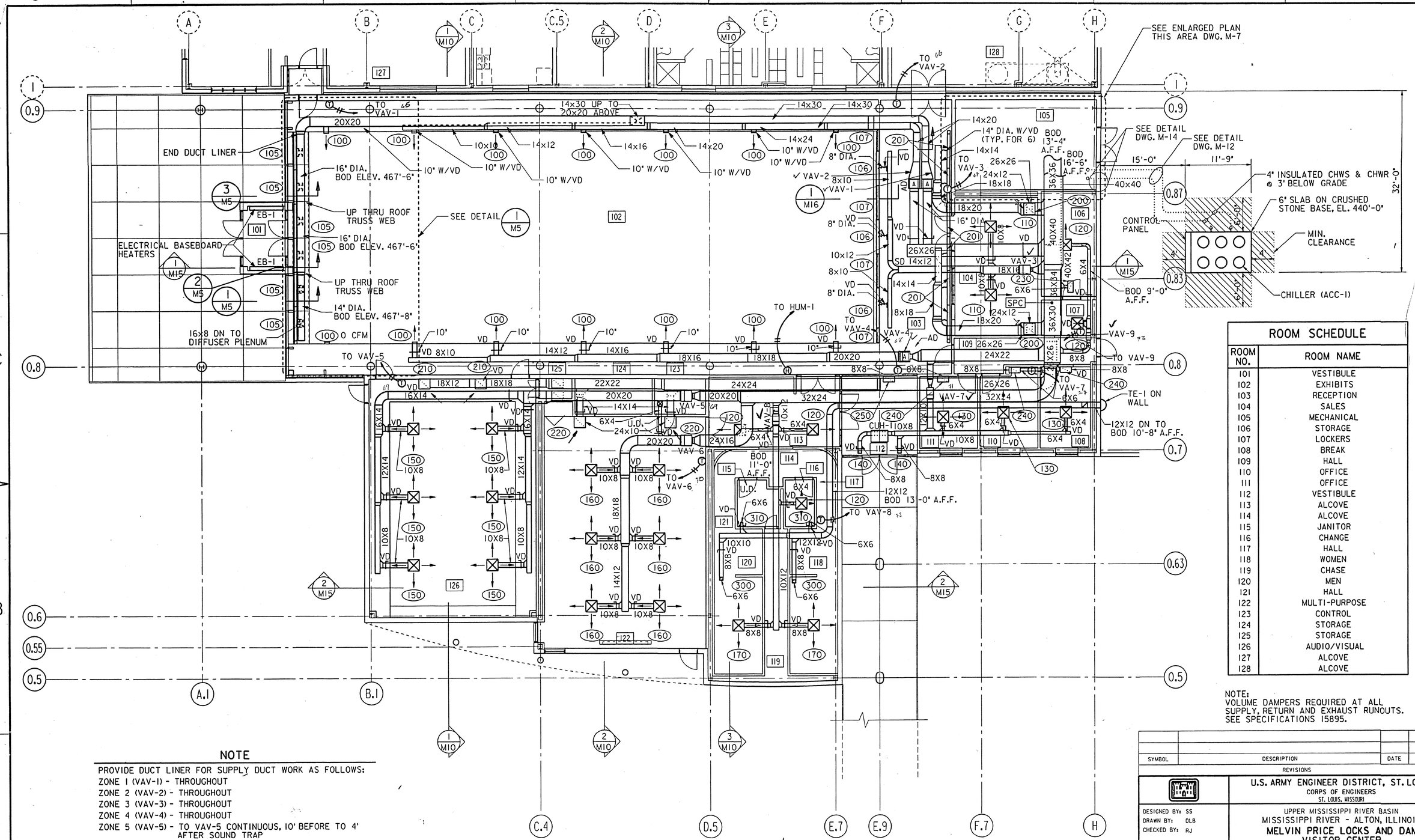

ROOM SCHEDULE

ROOM NO.	ROOM NAME
101	VESTIBULE
102	EXHIBITS
103	RECEPTION
104	SALES
105	MECHANICAL
106	STORAGE
107	LOCKERS
108	BREAK
109	HALL
110	OFFICE
111	OFFICE
112	VESTIBULE
113	ALCOVE
114	ALCOVE
115	JANITOR
116	CHANGE
117	HALL
118	WOMEN
119	CHASE
120	MEN
121	HALL
122	MULTI-PURPOSE
123	CONTROL
124	STORAGE
125	STORAGE
126	AUDIO/VISUAL
127	ALCOVE
128	ALCOVE

NOTE:
VOLUME DAMPERS REQUIRED AT ALL SUPPLY, RETURN AND EXHAUST RUNOUTS. SEE SPECIFICATIONS 15895.

NOTE

PROVIDE DUCT LINER FOR SUPPLY DUCT WORK AS FOLLOWS:

ZONE 1 (VAV-1) - THROUGHOUT
ZONE 2 (VAV-2) - THROUGHOUT
ZONE 3 (VAV-3) - THROUGHOUT
ZONE 4 (VAV-4) - THROUGHOUT
ZONE 5 (VAV-5) - TO VAV-5 CONTINUOUS, 10' BEFORE TO 4' AFTER SOUND TRAP
ZONE 6 (VAV-6) - TO VAV-6 CONTINUOUS
ZONE 7 (VAV-7) - THROUGHOUT
ZONE 8 (VAV-8) - TO VAV-8 CONTINUOUS
ZONE 9 (VAV-9) - THROUGHOUT

PROVIDE DUCT LINER FOR RETURN DUCTWORK LOCATED PLAN EAST OF COL. E.7 AND 4' BEFORE AND 10' AFTER SOUND TRAP FROM ROOM NO. 126.

FLOOR PLAN

1/8" = 1'-0"

12"0 5' 10' 15'

PLAN NORTH

AS BUILT

SYMBOL	DESCRIPTION	DATE	APPROVED

REVISIONS

U.S. ARMY ENGINEER DISTRICT, ST. LOUIS
CORPS OF ENGINEERS
ST. LOUIS, MISSOURI

DESIGNED BY: SS
DRAWN BY: DLB
CHECKED BY: RJ
DATE: NOVEMBER, 1996
SUBMITTED:
DESIGN ENGINEER

UPPER MISSISSIPPI RIVER BASIN
MISSISSIPPI RIVER - ALTON, ILLINOIS
MELVIN PRICE LOCKS AND DAM
VISITOR CENTER
MECHANICAL

HVAC DUCTWORK PLAN

SUBMITTED: GARY M. JONES, CHIEF, MECH./ELEC. SECTION
APPROVED: BOBBY R. HUGHEY, CHIEF, DESIGN BRANCH

SIZE: D | DWG. CODE: DACW 43 | DRAWING NO. M-MP-2/M-4

DESIGN FILE: n:\melprice\visitor\mpvcm004.dgn | PLOT DATE: 10-OCT-1996 11:07
PLOT SCALE: | SOL. NO. DACW43-97-B-0204 | FILE NO.

CMT CRAWFORD, MURPHY & TILLY, INC.

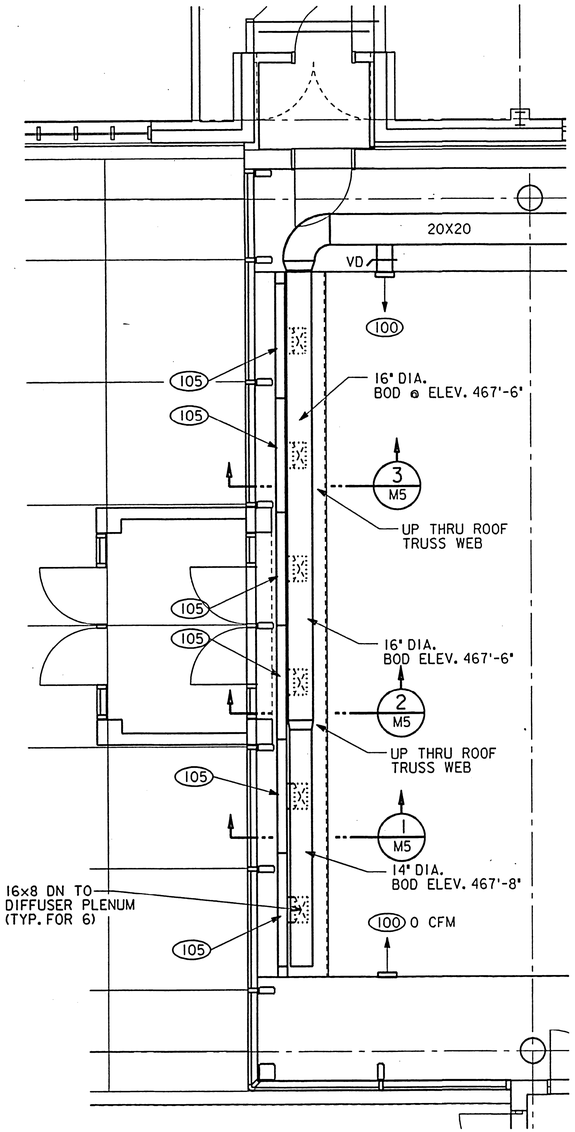

1 M5 DETAIL
REF: M4
SCALE: 1/4" = 1'-0"
12" 0 5'

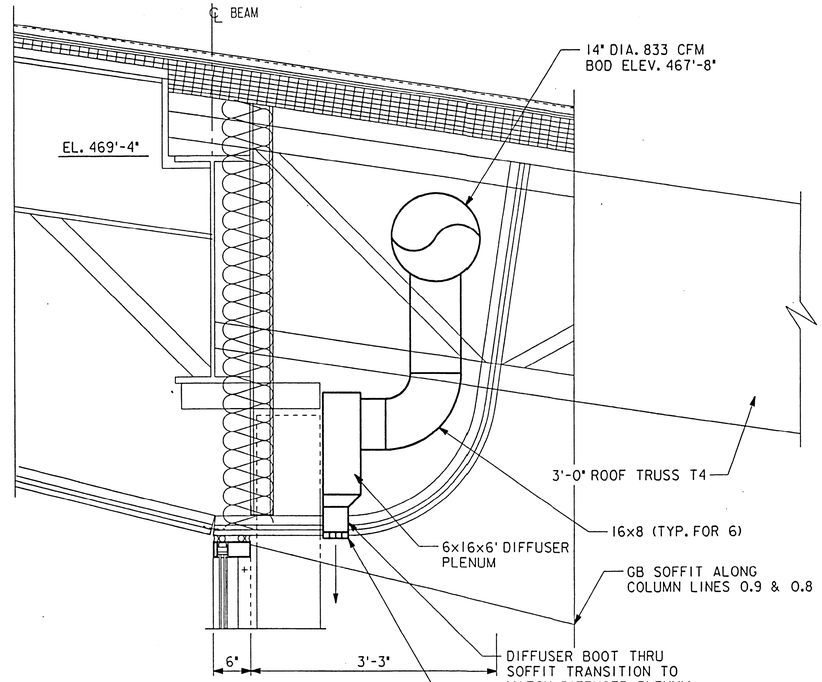

1 M5 SECTION
1" = 1'-0"

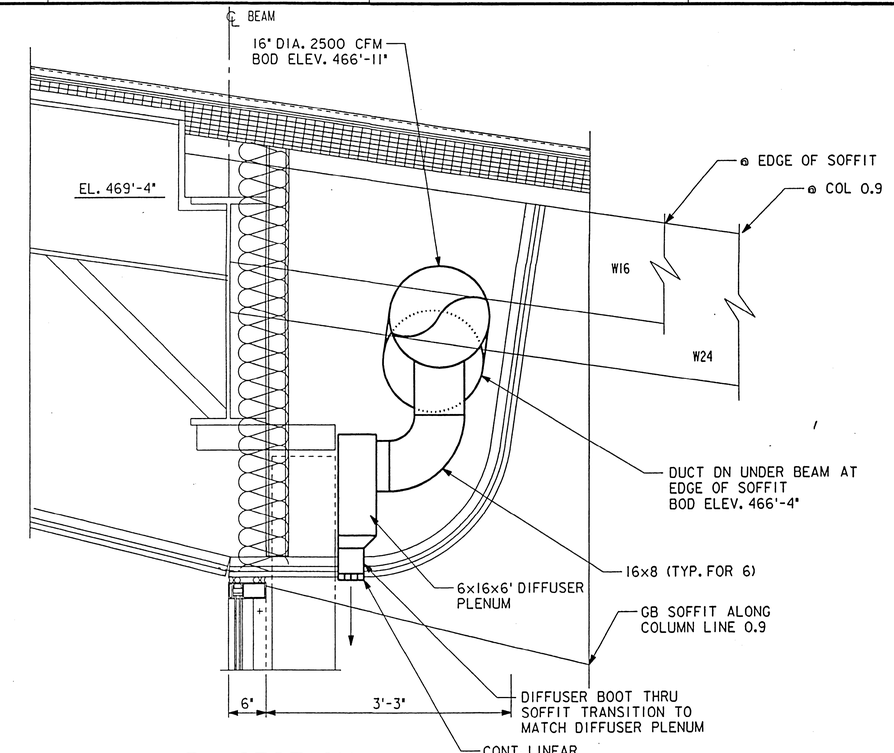

3 M5 SECTION
1" = 1'-0"

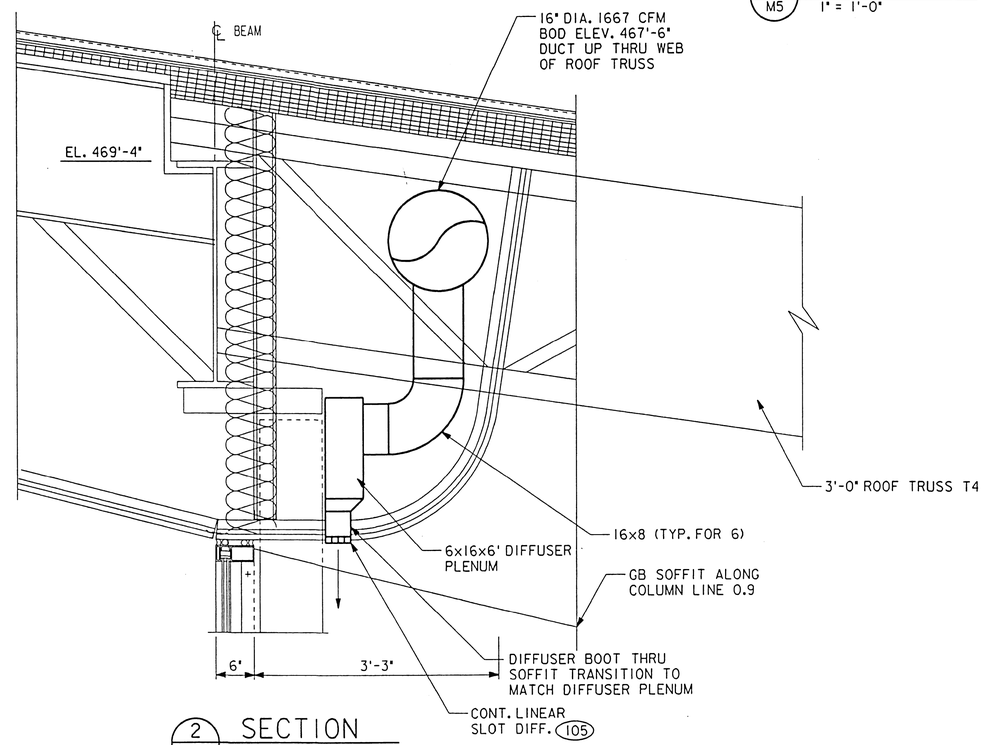

2 M5 SECTION
1" = 1'-0"

AS BUILT

SYMBOL	DESCRIPTION	DATE	APPROVED

REVISIONS

U.S. ARMY ENGINEER DISTRICT, ST. LOUIS
CORPS OF ENGINEERS
ST. LOUIS, MISSOURI

DESIGNED BY: SAS
DRAWN BY: DLB
CHECKED BY: RJ
DATE: NOVEMBER, 1996

SUBMITTED:
DESIGN ENGINEER

SUBMITTED:
GARY M. JONES
CHIEF, MECH./ELEC. SECTION

APPROVED:
BOBBY R. HUCHEY
CHIEF, DESIGN BRANCH

UPPER MISSISSIPPI RIVER BASIN
MISSISSIPPI RIVER - ALTON, ILLINOIS
MELVIN PRICE LOCKS AND DAM
VISITOR CENTER
MECHANICAL
BUILDING DETAILS
AND SECTIONS

SIZE	DWG. CODE	DRAWING NO.
D	DACW 43	M-MP-2/M-5

DESIGN FILE: n:\melprice\visitor\mpvcm005.dgn | PLOT DATE: 10-OCT-1996 11:09
PLOT SCALE: 8:1 | SOL. NO. DACW43-97-B-0204 | FILE NO.

CMT
CRAWFORD, MURPHY & TILLY, INC.

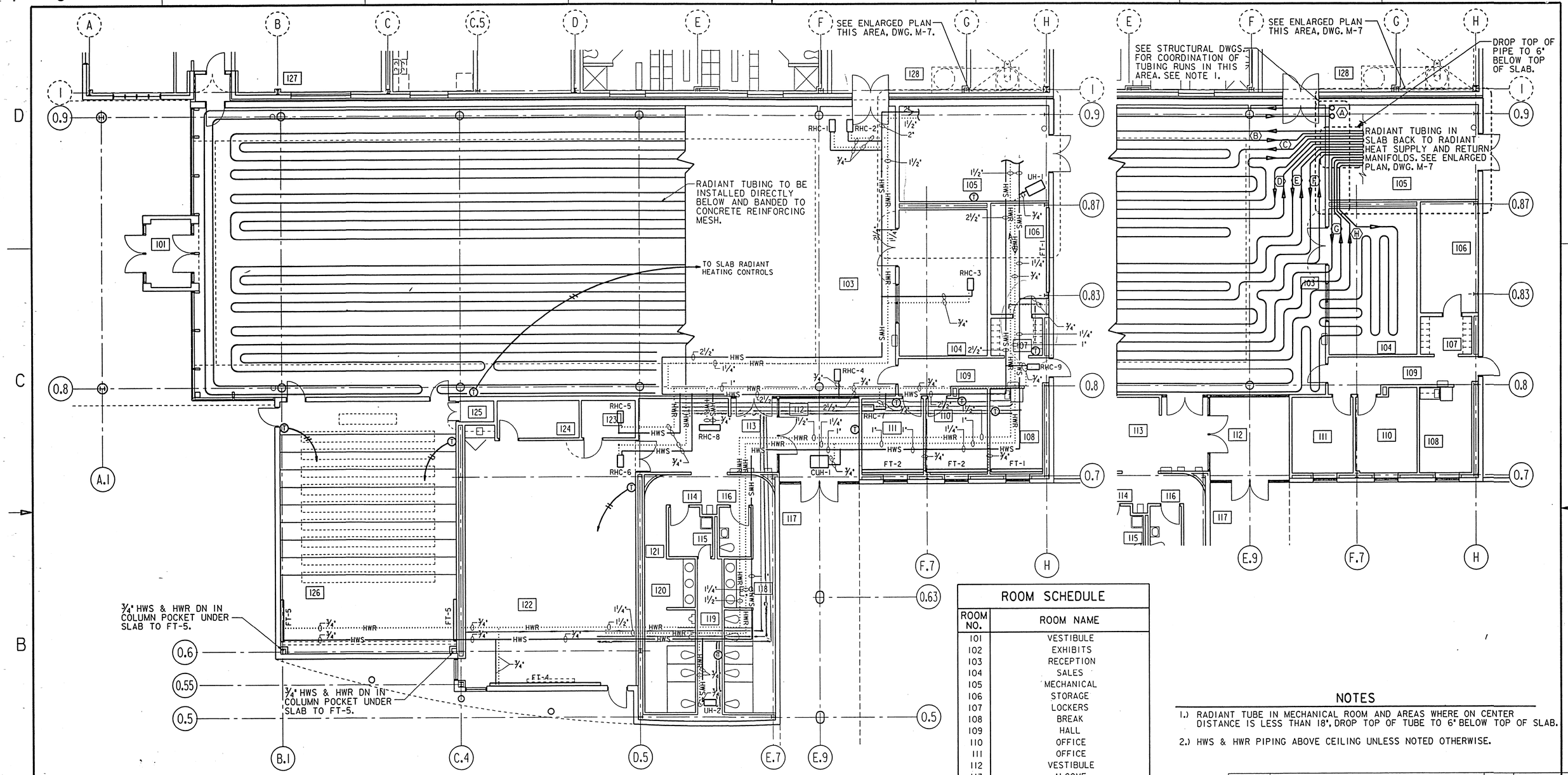

AS BUILT

RADIANT FLOOR SLAB CIRCUIT SCHEDULE

CKT	TUBE SIZE	LENGTH (NOM.)	FLOW (GPM) NOM.	P.D. NOTE 1
A	¾	480 FEET	1.4	.432
B	¾	413 FEET	1.4	.372
C	¾	434 FEET	1.4	.391
D	¾	427 FEET	1.4	.384
E	¾	447 FEET	1.4	.402
F	¾	472 FEET	1.4	.425
G	¾	370 FEET	1.4	.333
H	¾	439 FEET	1.4	.395

NOTE
1.) BASED ON HEATWAY ENTRAN III TUBING
2.) NOMINAL TUBE SPACING 18"

FLOOR PLAN

⅛" = 1'-0"

12"0 5' 10' 15'

PLAN NORTH

ROOM SCHEDULE

ROOM NO.	ROOM NAME
101	VESTIBULE
102	EXHIBITS
103	RECEPTION
104	SALES
105	MECHANICAL
106	STORAGE
107	LOCKERS
108	BREAK
109	HALL
110	OFFICE
111	OFFICE
112	VESTIBULE
113	ALCOVE
114	ALCOVE
115	JANITOR
116	CHANGE
117	HALL
118	WOMEN
119	CHASE
120	MEN
121	HALL
122	MULTI-PURPOSE
123	CONTROL
124	STORAGE
125	STORAGE
126	AUDIO/VISUAL
127	ALCOVE
128	ALCOVE

NOTES

1.) RADIANT TUBE IN MECHANICAL ROOM AND AREAS WHERE ON CENTER DISTANCE IS LESS THAN 18", DROP TOP OF TUBE TO 6" BELOW TOP OF SLAB.

2.) HWS & HWR PIPING ABOVE CEILING UNLESS NOTED OTHERWISE.

SYMBOL	DESCRIPTION	DATE	APPROVED

REVISIONS

U.S. ARMY ENGINEER DISTRICT, ST. LOUIS
CORPS OF ENGINEERS
ST. LOUIS, MISSOURI

DESIGNED BY: RJ
DRAWN BY: DLB
CHECKED BY: SAS
DATE: NOVEMBER, 1996

UPPER MISSISSIPPI RIVER BASIN
MISSISSIPPI RIVER - ALTON, ILLINOIS
MELVIN PRICE LOCKS AND DAM
VISITOR CENTER
MECHANICAL

HVAC PIPING PLAN

SUBMITTED: DESIGN ENGINEER
SUBMITTED: GARY M. JONES, CHIEF, MECH/ELEC. SECTION
APPROVED: BOBBY R. HUGHEY, CHIEF, DESIGN BRANCH

SIZE D | DWG. CODE DACW 43 | DRAWING NO. M-MP-2/M-6

DESIGN FILE: n:\melprice\visitor\mpvcm006.dgn | PLOT DATE: 10-OCT-1996 11:11
PLOT SCALE: 8:1 | SOL. NO. DACW43-97-B-0204 | FILE NO.

CMT CRAWFORD, MURPHY & TILLY, INC.

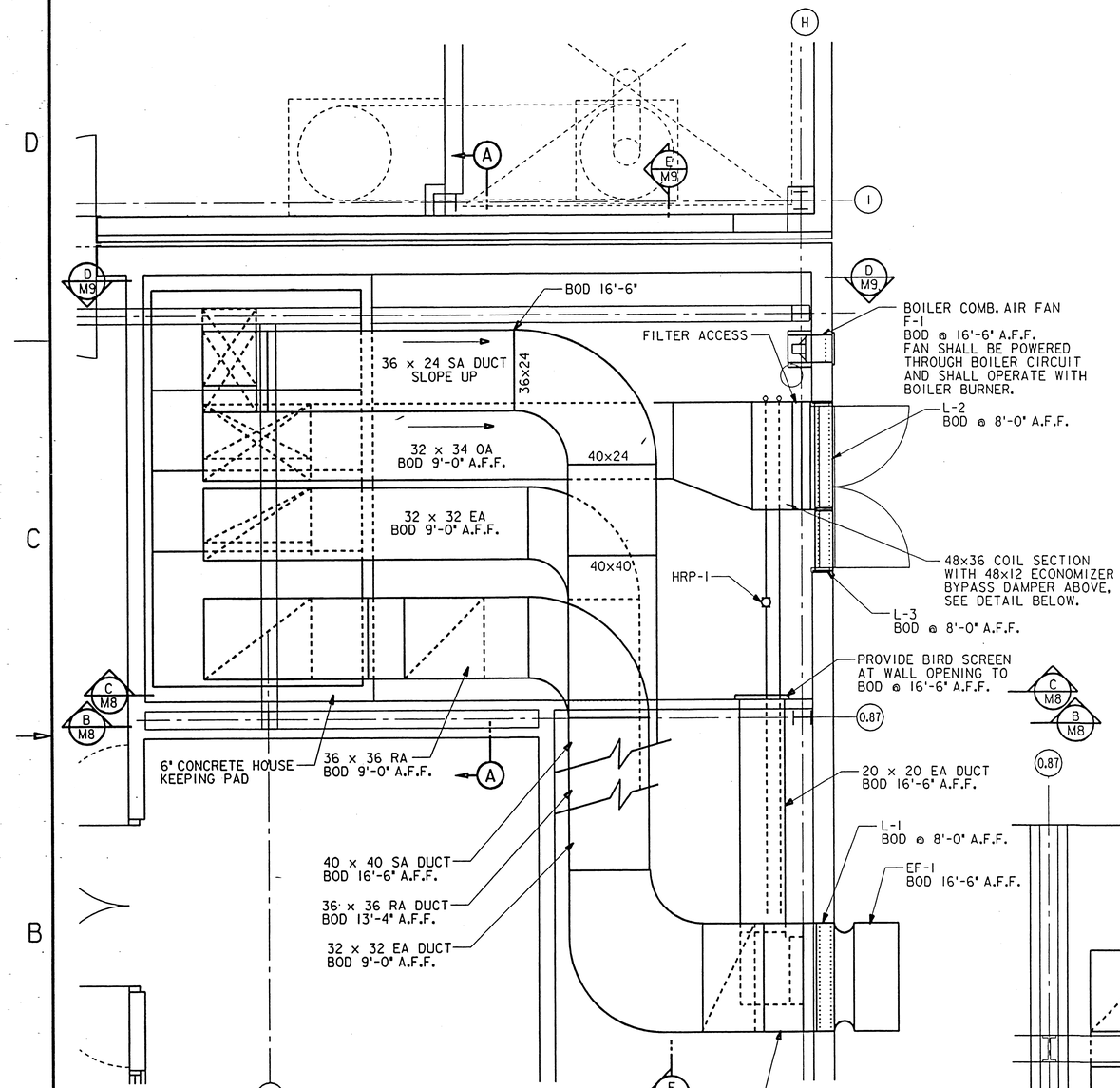

MECHANICAL ROOM DUCT PLAN

SCALE: 3/8" = 1'-0" REF: M4

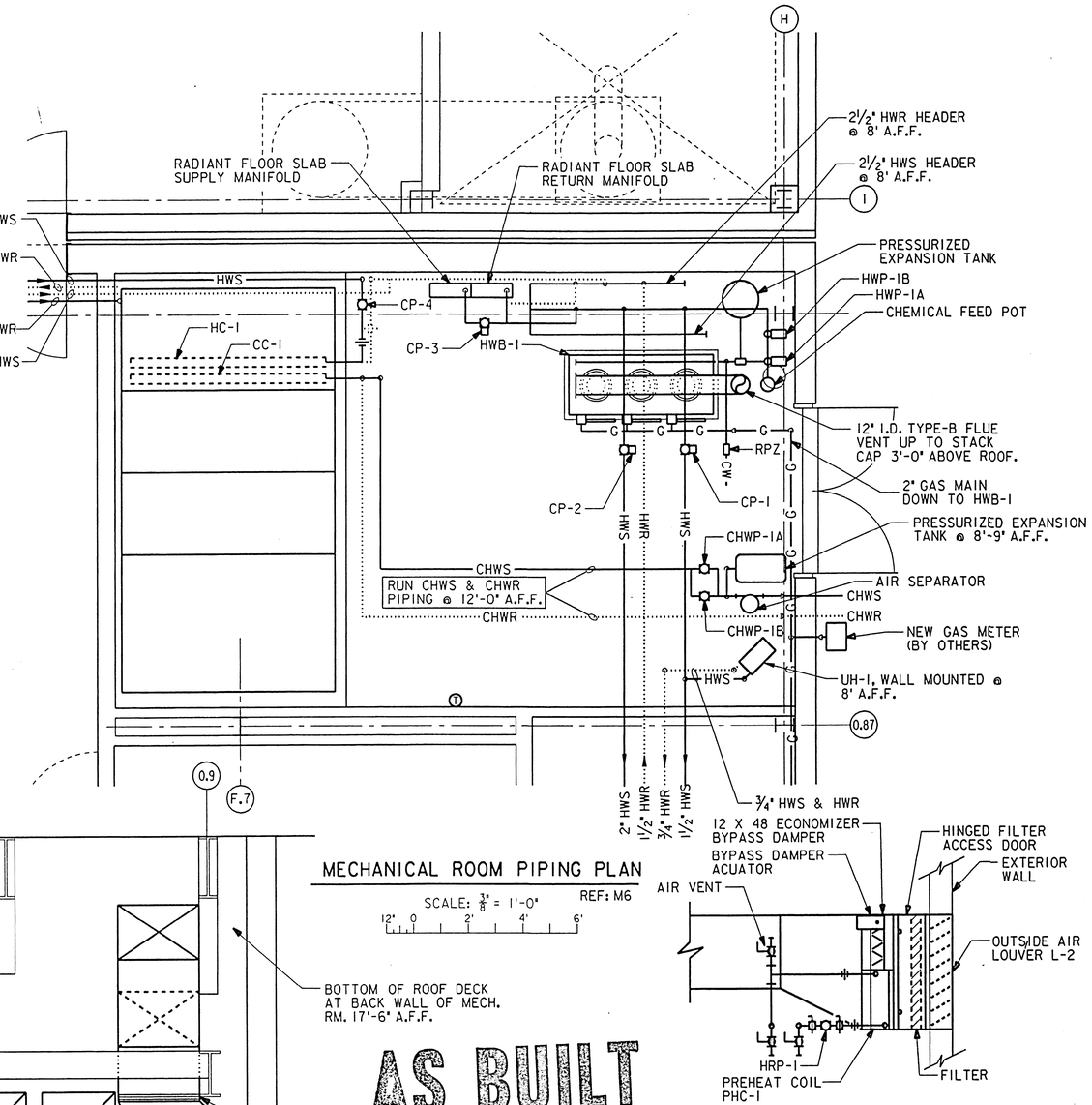

MECHANICAL ROOM PIPING PLAN

SCALE: 3/8" = 1'-0" REF: M6

AS BUILT

PREHEAT COIL/DAMPER DETAIL

N.T.S.

SECTION A

SCALE: 3/8" = 1'-0"

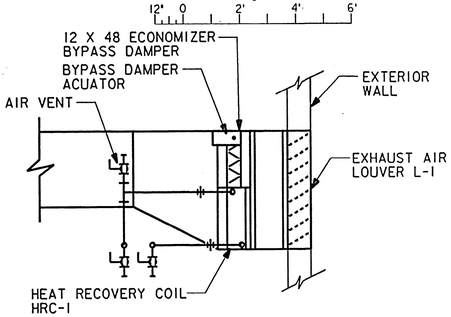

HEAT RECOVERY COIL/DAMPER DETAIL

N.T.S.

SYMBOL	DESCRIPTION	DATE	APPROVED

REVISIONS

U.S. ARMY ENGINEER DISTRICT, ST. LOUIS
CORPS OF ENGINEERS
ST. LOUIS, MISSOURI

DESIGNED BY: SAS
DRAWN BY: DLB
CHECKED BY: RJ
DATE: NOVEMBER, 1996
SUBMITTED:
DESIGN ENGINEER
SUBMITTED: GARY M. JONES, CHIEF, MECH./ELEC. SECTION
APPROVED: BOBBY R. HUGHEY, CHIEF, DESIGN BRANCH

UPPER MISSISSIPPI RIVER BASIN
MISSISSIPPI RIVER - ALTON, ILLINOIS
MELVIN PRICE LOCKS AND DAM
VISITOR CENTER
MECHANICAL
ENLARGED MECHANICAL ROOM PLAN

SIZE: D | DWG. CODE: DACW 43 | DRAWING NO. M-MP-2/M-7

DESIGN FILE: n:\melprice\visitor\mpvcm007.dgn | PLOT DATE: 10-OCT-1996 11:13
PLOT SCALE: 2.67:1 | SOL. NO. DACW43-97-B-0204 | FILE NO.

CMT CRAWFORD, MURPHY & TILLY, INC.

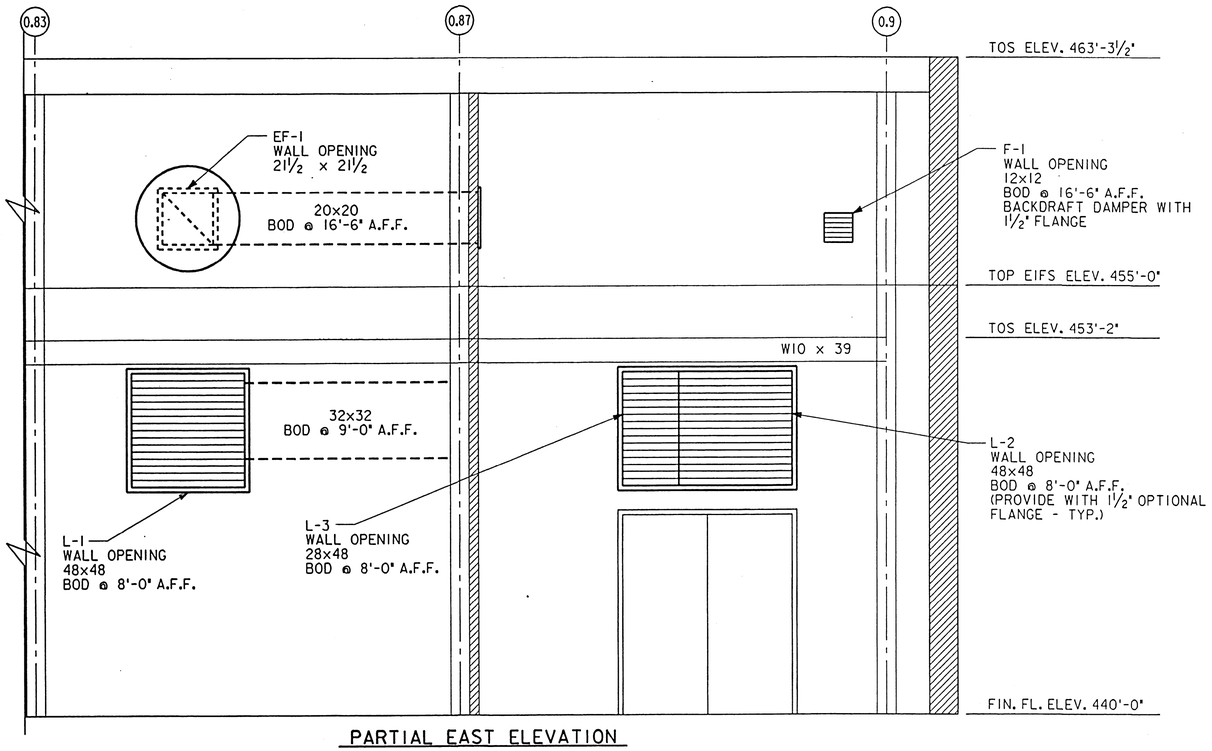

PARTIAL EAST ELEVATION

SCALE: 3/8" = 1'-0"

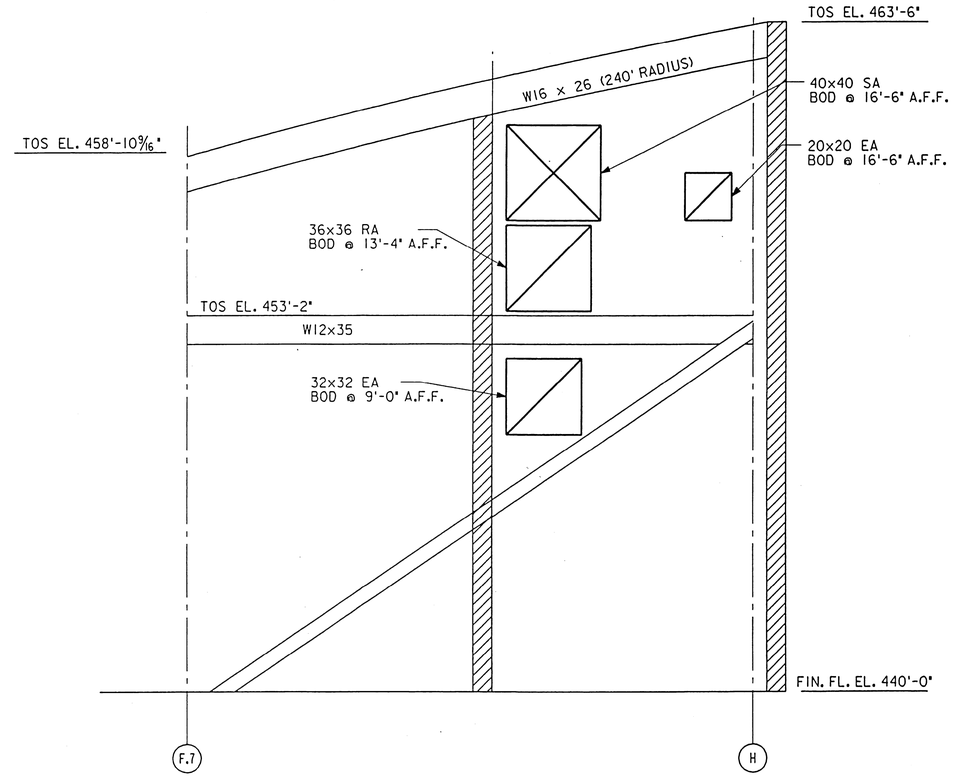

B / M8 SECTION REF: M7

SCALE: 3/8" = 1'-0"

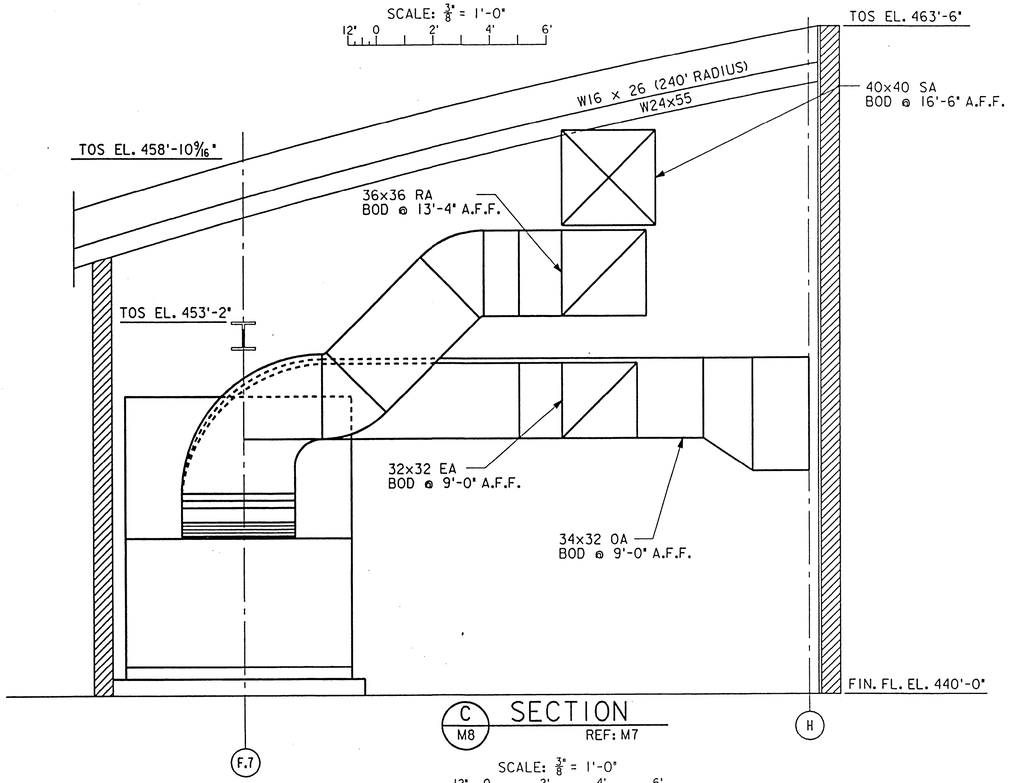

C / M8 SECTION REF: M7

SCALE: 3/8" = 1'-0"

AS BUILT

SYMBOL	DESCRIPTION	DATE	APPROVED

REVISIONS

U.S. ARMY ENGINEER DISTRICT, ST. LOUIS
CORPS OF ENGINEERS
ST. LOUIS, MISSOURI

DESIGNED BY: SAS
DRAWN BY: DLB
CHECKED BY: RJ
DATE: NOVEMBER, 1996

UPPER MISSISSIPPI RIVER BASIN
MISSISSIPPI RIVER - ALTON, ILLINOIS
MELVIN PRICE LOCKS AND DAM
VISITOR CENTER
MECHANICAL

BUILDING SECTIONS

SUBMITTED:
DESIGN ENGINEER

SUBMITTED:
GARY M. JONES
CHIEF, MECH./ELEC. SECTION

APPROVED:
BOBBY R. HUGHEY
CHIEF, DESIGN BRANCH

SIZE: D | DWG. CODE: DACW 43 | DRAWING NO. M-MP-2/M-8

DESIGN FILE: n:\melprice\visitor\mpvcm008.dgn | PLOT DATE: 10-OCT-1996 11:15

PLOT SCALE: 8:1 | SOL. NO. DACW43-97-B-0204 | FILE NO.

CMT
CRAWFORD, MURPHY & TILLY, INC.

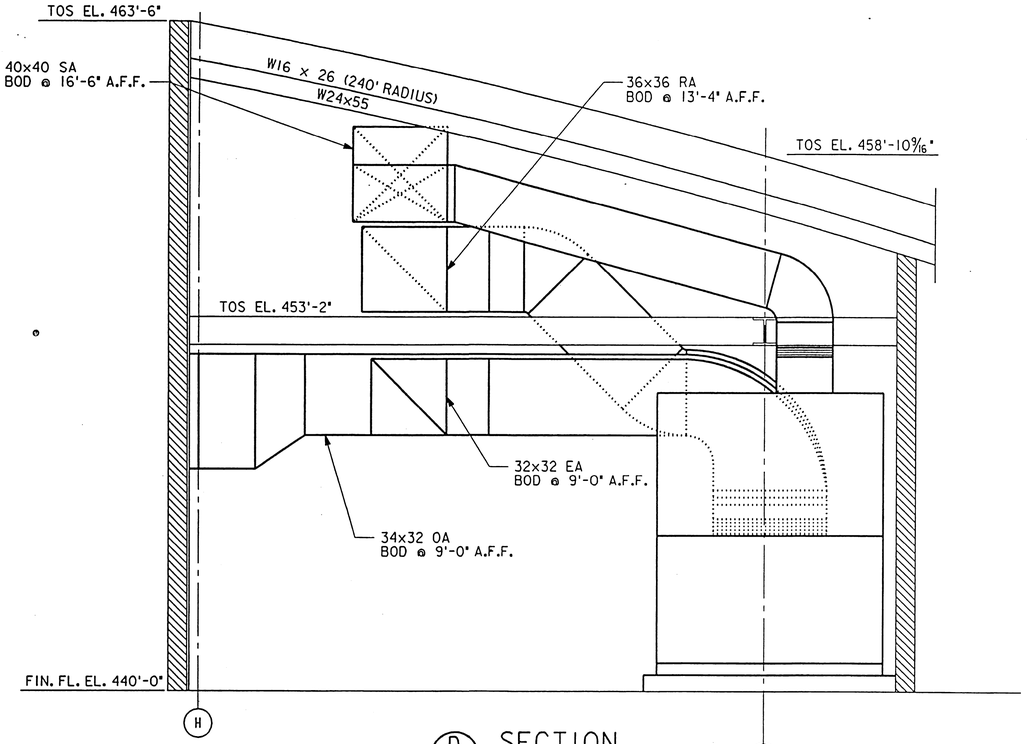

D / M9 SECTION
REF: M7

SCALE: 3/8" = 1'-0"

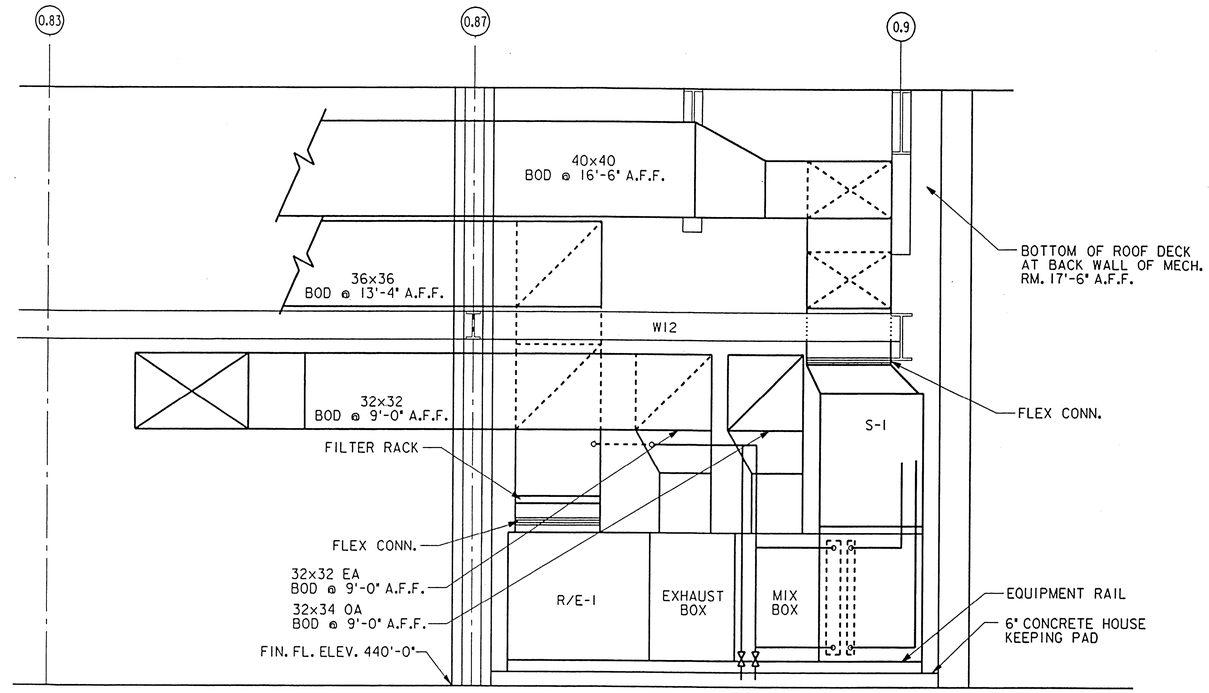

E / M9 SECTION
REF: M7

SCALE: 3/8" = 1'-0"

AS BUILT

SYMBOL	DESCRIPTION	DATE	APPROVED

REVISIONS

U.S. ARMY ENGINEER DISTRICT, ST. LOUIS
CORPS OF ENGINEERS
ST. LOUIS, MISSOURI

DESIGNED BY: SAS
DRAWN BY: DLB
CHECKED BY: RJ
DATE: NOVEMBER, 1996

SUBMITTED:
DESIGN ENGINEER

SUBMITTED:
GARY M. JONES
CHIEF, MECH./ELEC. SECTION

APPROVED:
BOBBY R. HUGHEY
CHIEF, DESIGN BRANCH

UPPER MISSISSIPPI RIVER BASIN
MISSISSIPPI RIVER - ALTON, ILLINOIS
MELVIN PRICE LOCKS AND DAM
VISITOR CENTER
MECHANICAL

BUILDING SECTIONS

SIZE	DWG. CODE	DRAWING NO.
D	DACW 43	M-MP-2/M-9

DESIGN FILE: n:\melprice\visitor\mpvcm009.dgn
PLOT DATE: 10-OCT-1996 11:16
PLOT SCALE: 8:1
SOL. NO. DACW43-97-B-0204
FILE NO.

CMT
CRAWFORD, MURPHY & TILLY, INC.

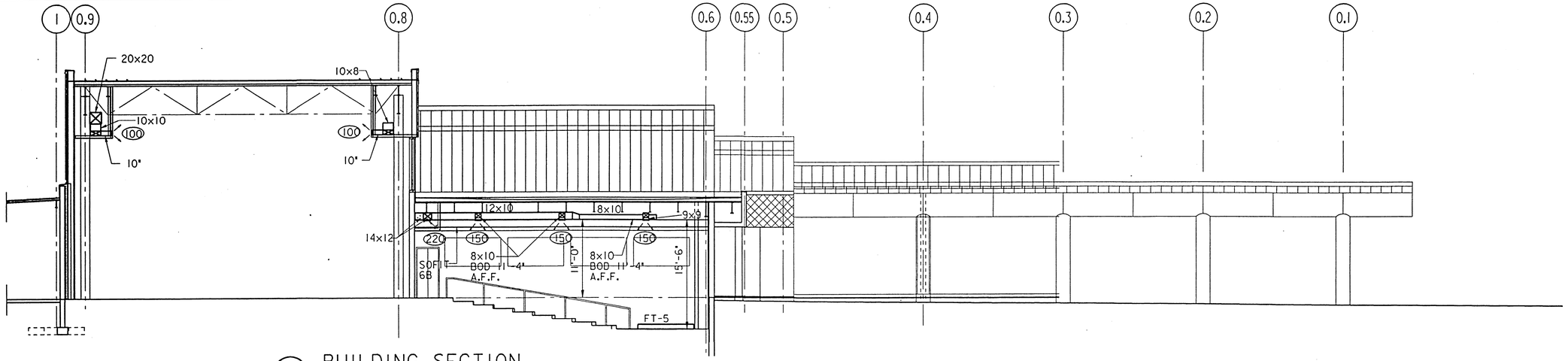

1 / M10 BUILDING SECTION

1/8" = 1'-0" REF: M4

12"0 5' 10' 15'

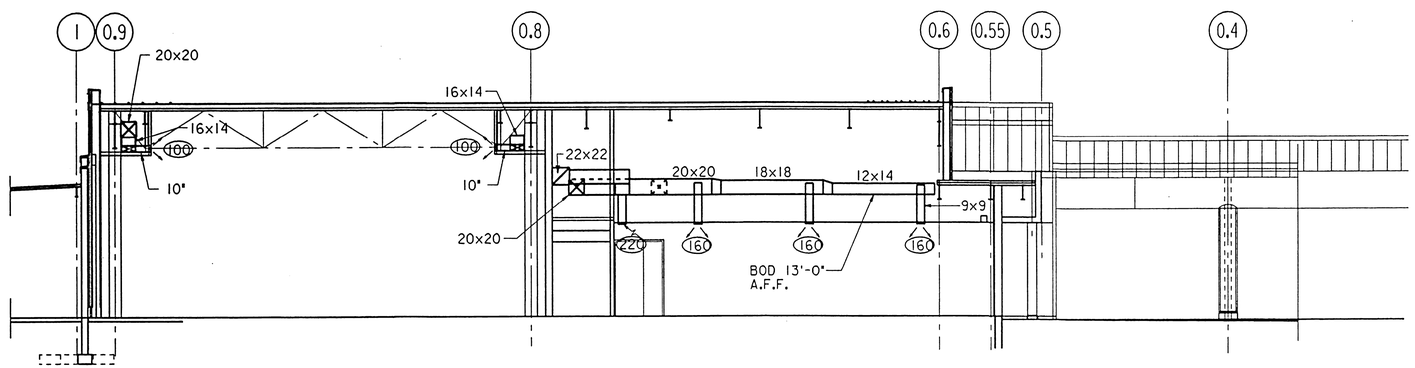

2 / M10 BUILDING SECTION

1/8" = 1'-0" REF: M4

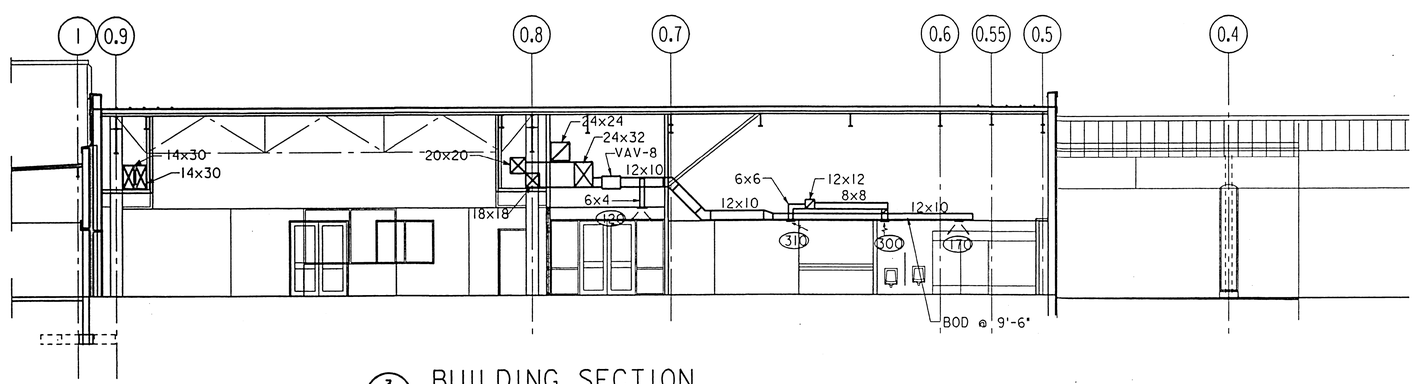

3 / M10 BUILDING SECTION

1/8" = 1'-0" REF: M4

AS BUILT

SYMBOL	DESCRIPTION	DATE	APPROVED

REVISIONS

U.S. ARMY ENGINEER DISTRICT, ST. LOUIS
CORPS OF ENGINEERS
ST. LOUIS, MISSOURI

DESIGNED BY: SAS
DRAWN BY: DSE
CHECKED BY: RJ
DATE: NOVEMBER, 1996

UPPER MISSISSIPPI RIVER BASIN
MISSISSIPPI RIVER - ALTON, ILLINOIS
MELVIN PRICE LOCKS AND DAM
VISITOR CENTER
MECHANICAL
BUILDING SECTIONS

SUBMITTED:
DESIGN ENGINEER

SUBMITTED: GARY M. JONES
CHIEF, MECH./ELEC. SECTION

APPROVED: BOBBY R. HUGHEY
CHIEF, DESIGN BRANCH

SIZE	DWG. CODE	DRAWING NO.
D	DACW 43	M-MP-2/M-10

DESIGN FILE: n:\melprice\visitor\mpvcm010.dgn | PLOT DATE: 10-OCT-1996 11:18
PLOT SCALE: 8:1 | SOL. NO. DACW43-97-B-0204 | FILE NO.

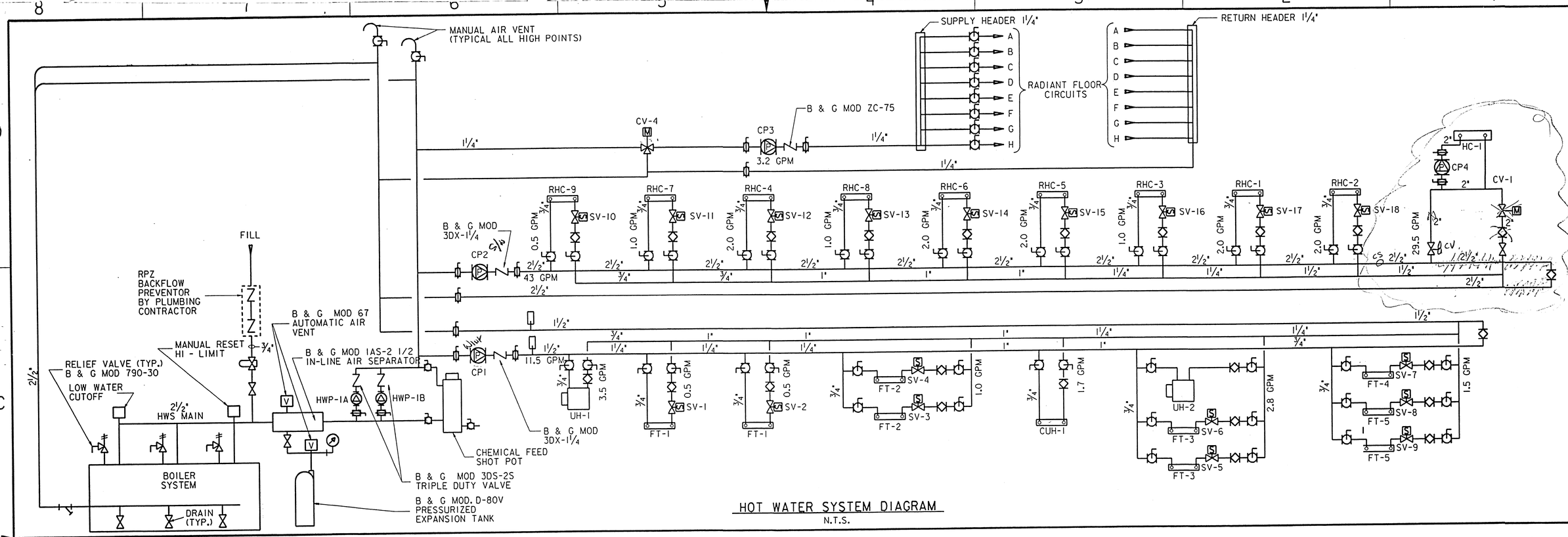

HOT WATER SYSTEM DIAGRAM
N.T.S.

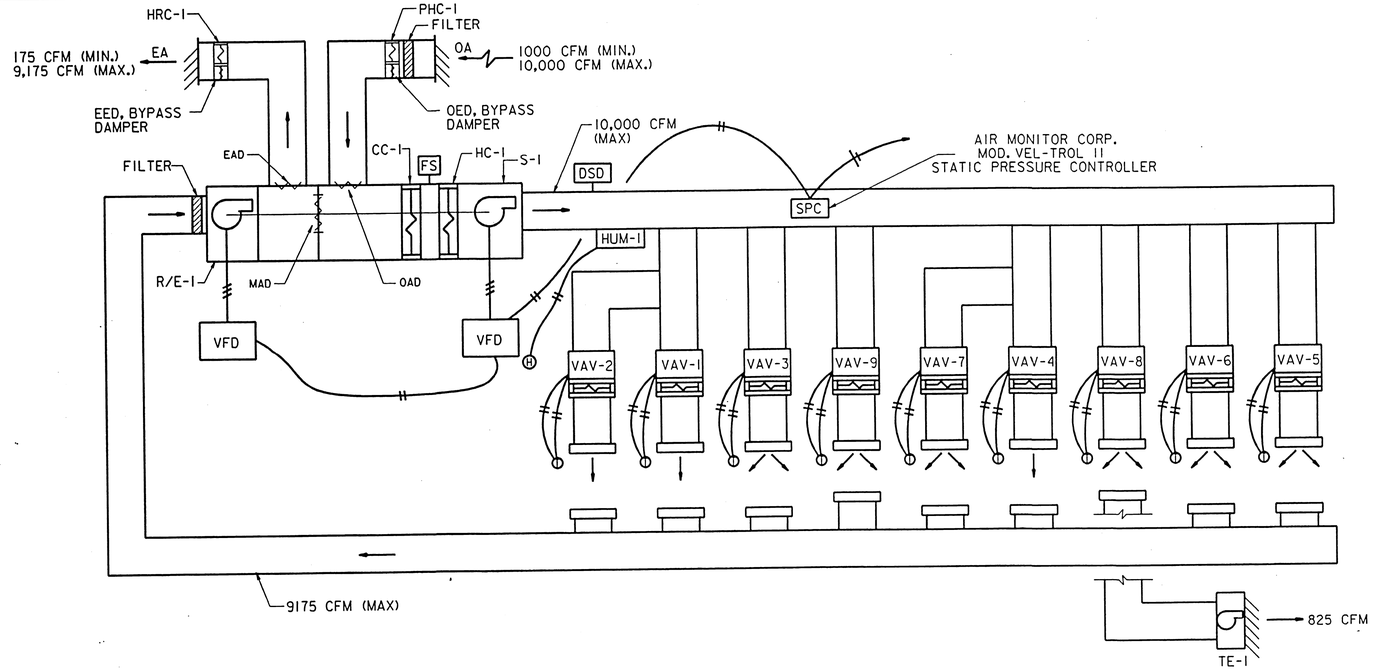

AIR HANDLING SYSTEM DIAGRAM
N.T.S.

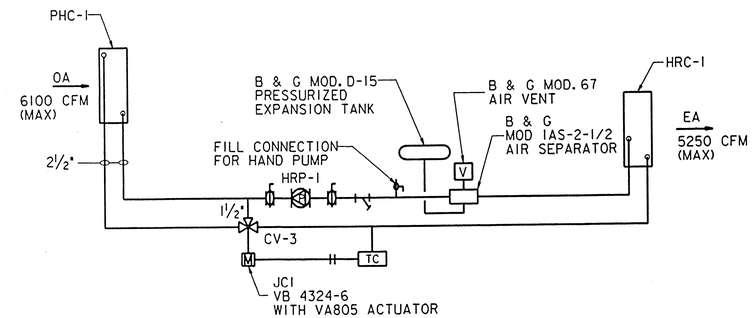

HEAT RECOVERY SYSTEM DIAGRAM
N.T.S.

AS BUILT

SYMBOL	DESCRIPTION	DATE	APPROVED

REVISIONS

U.S. ARMY ENGINEER DISTRICT, ST. LOUIS
CORPS OF ENGINEERS
ST. LOUIS, MISSOURI

DESIGNED BY: RJ
DRAWN BY: DLB
CHECKED BY: SAS
DATE: NOVEMBER, 1996

UPPER MISSISSIPPI RIVER BASIN
MISSISSIPPI RIVER - ALTON, ILLINOIS
MELVIN PRICE LOCKS AND DAM
VISITOR CENTER
MECHANICAL

HVAC DIAGRAMS

SUBMITTED: DESIGN ENGINEER
SUBMITTED: GARY M. JONES, CHIEF, MECH./ELEC. SECTION
APPROVED: BOBBY R. HUGHEY, CHIEF, DESIGN BRANCH

CMT CRAWFORD, MURPHY & TILLY, INC.

SIZE: D | DWG. CODE: DACW 43 | DRAWING NO. M-MP-2/M-11

DESIGN FILE: n:\melprice\visitor\mpvcm011.dgn | PLOT DATE: 10-OCT-1996 11:20
PLOT SCALE: 8:1 | SOL. NO. DACW43-97-B-0204 | FILE NO.

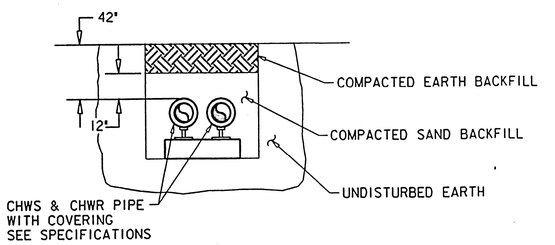

CHILLED WATER UNDERGROUND PIPING
N.T.S.

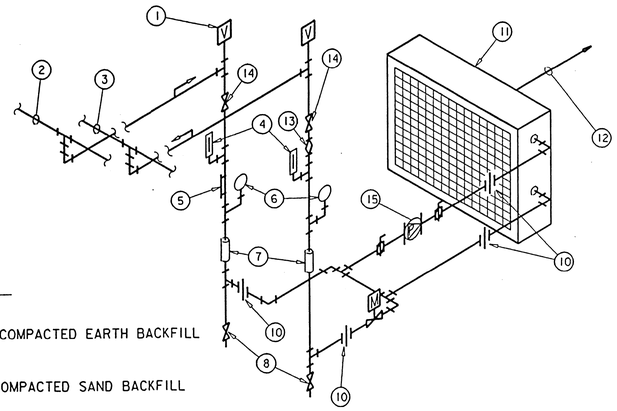

NOTES

1. MANUAL AIR VENTS
2. HWS MAIN
3. HWR MAIN
4. WATER THERMOMETER. SEE SPECIFICATIONS.
5. FLOW METER
6. 3½" DIAMETER PRESSURE GAUGE WITH COCK. SEE SPECIFICATIONS. COCK NORMALLY CLOSED.
7. FLEXIBLE PIPE CONNECTOR
8. ½" DRAIN VALVES WITH HOSE CONNECTION.
9. 2-WAY VALVE, CV-1
10. UNION (TYPICAL) OFFSET RISERS TO ALLOW COIL TO BE PULLED.
11. COIL, HC-1
12. AIR FLOW
13. BALANCING VALVE. SEE SPECIFICATIONS.
14. GATE VALVE
15. CP-4

HOT WATER COIL PIPING DETAIL
N.T.S.

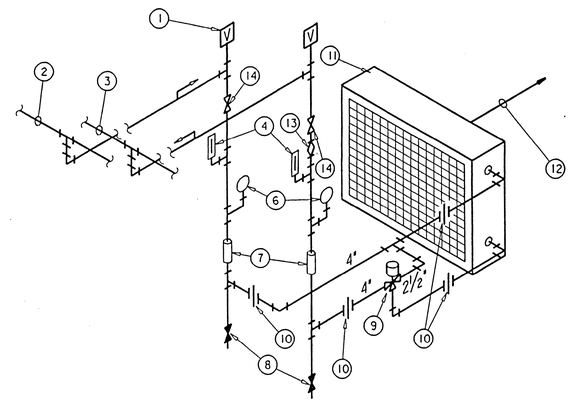

NOTES

1. MANUAL AIR VENTS
2. CWS MAIN
3. CWR MAIN
4. WATER THERMOMETER. SEE SPECIFICATIONS.
6. 3½" DIAMETER PRESSURE GAUGE WITH COCK. SEE SPECIFICATIONS. COCK NORMALLY CLOSED.
7. FLEXIBLE PIPE CONNECTOR
8. ½" DRAIN VALVES WITH HOSE CONNECTION.
9. 3-WAY VALVE, CV-2
10. UNION (TYPICAL) OFFSET RISERS TO ALLOW COIL TO BE PULLED.
11. COIL, CC-1
12. AIR FLOW
13. BALANCING VALVE. SEE SPECIFICATIONS.
14. GATE VALVE

CHILLED WATER COIL PIPING DETAIL
N.T.S.

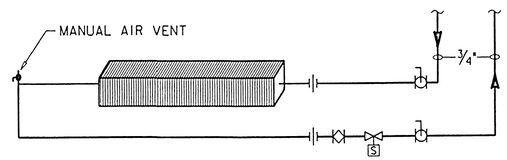

FIN TUBE CONTROL DETAIL
N.T.S.

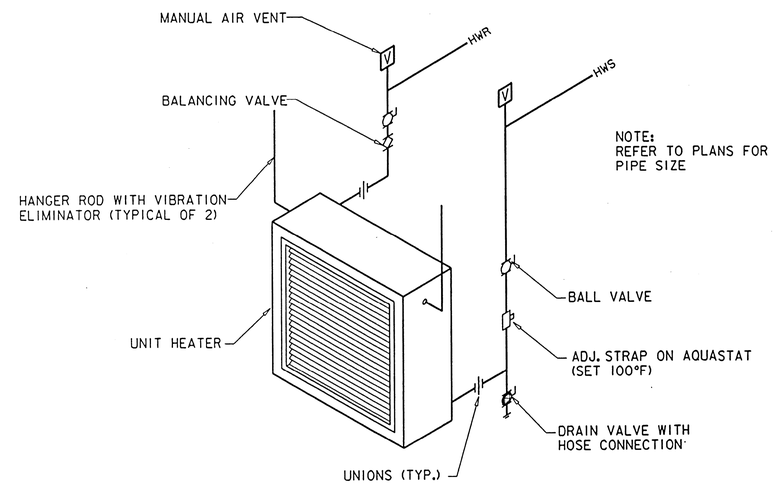

NOTE:
REFER TO PLANS FOR
PIPE SIZE

UNIT HEATER PIPING DETAIL (TYP.)
N.T.S.

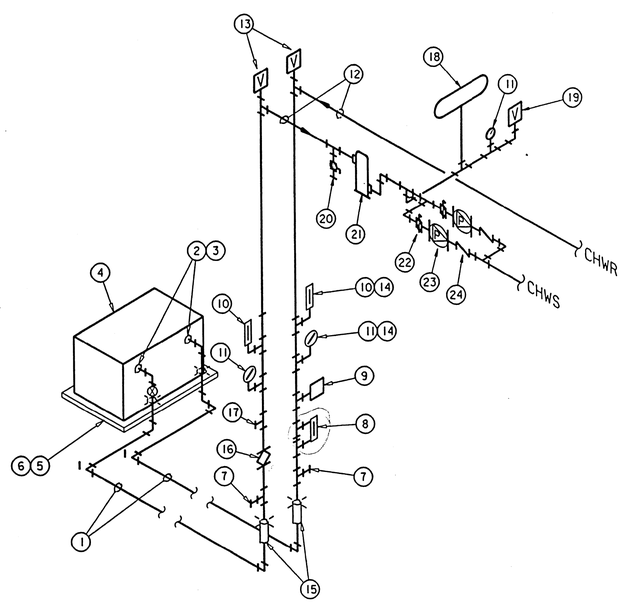

NOTES

1. INSULATED PIPING BELOW GRADE (SEE SPEC. SECTION 15250)
2. FLEXIBLE CONNECTIONS
3. MAKE CONNECTION TO CHILLER INLET AND OUTLET WITH FLANGED UNION.
4. PACKAGED AIR COOLED COLD GENERATOR CHILLER.
5. CONCRETE PAD BY HEATING CONTRACTOR.
6. SPRING TYPE VIBRATION ISOLATORS BY HEATING CONTRACTOR.
7. GATE VALVE
8. B&G THERMOFLOW INDICATOR MODEL NO. TFI-4.
9. FLOW SWITCH
10. THERMOMETER
11. PRESSURE GAUGE
12. CWS AND CWR MAINS IN INTERIOR.
13. MANUAL AIR VENT
14. LOCATE WITH IN VIEW WHILE STANDING ON FLOOR.
15. PROVIDE PIPE SLEEVE THRU FLOOR FOR CWS & CWR. SIZED AS REQUIRED FOR EXTERIOR PIPING INSULATION TO CONTINUE THRU FLOOR TO INTERIOR. SEAL WITH CAULK TO BE AIR TIGHT AND WATER TIGHT.
16. BALANCING VALVE
17. TEE FOR REMOTE BULB CONTROLLER.
18. B&G PRESSURIZED EXPANSION TANK MOD. D-15
19. B&G AUTO AIR VENT MOD. 67
20. FILL VALVE WITH HOSE CONNECTION
21. B&G ROLAIRTROL MODEL R-3 AIR SEPARATOR WITH SCREEN
22. BUTTERFLY VALVE
23. CHWP-1A & CHWP-1B
24. B&G MOD. 3D-2½S TRIPLE DUTY VALVE

CHILLER PIPING DETAIL
N.T.S.

AS BUILT

CMT
CRAWFORD, MURPHY & TILLY, INC.

SYMBOL	DESCRIPTION	DATE	APPROVED

REVISIONS

U.S. ARMY ENGINEER DISTRICT, ST. LOUIS
CORPS OF ENGINEERS
ST. LOUIS, MISSOURI

DESIGNED BY: SAS
DRAWN BY: DLB
CHECKED BY: RJ
DATE: NOVEMBER, 1996
SUBMITTED:
DESIGN ENGINEER
SUBMITTED: GARY M. JONES
CHIEF, MECH./ELEC. SECTION
APPROVED: BOBBY R. HUGHEY
CHIEF, DESIGN BRANCH

UPPER MISSISSIPPI RIVER BASIN
MISSISSIPPI RIVER - ALTON, ILLINOIS
MELVIN PRICE LOCKS AND DAM
VISITOR CENTER
MECHANICAL

HVAC DETAILS

SIZE	DWG. CODE	DRAWING NO.
D	DACW 43	M-MP-2/M-12

DESIGN FILE: n:\melprice\visitor\mpvcm012.dgn | PLOT DATE: 10-OCT-1996 11:22
PLOT SCALE: 8:1 | SOL. NO. DACW43-97-B-0204 | FILE NO.

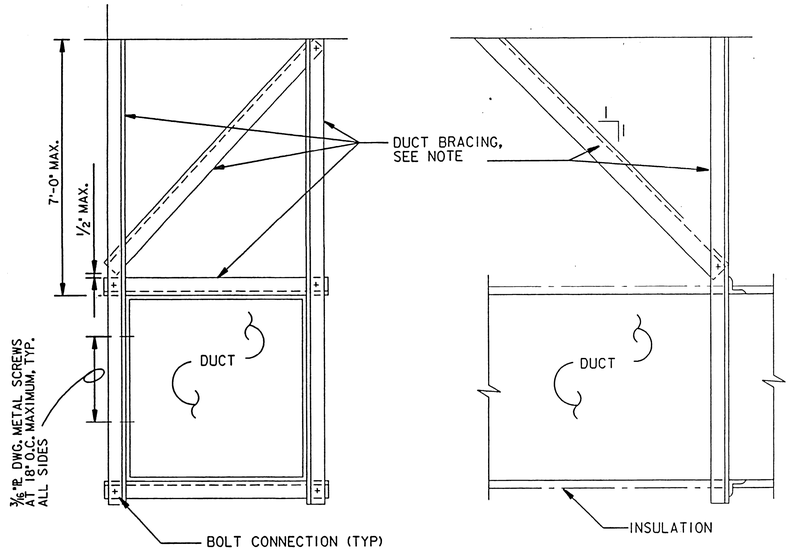

SEISMIC RESTRAINT OF DUCTS DETAIL (1 / M-13)

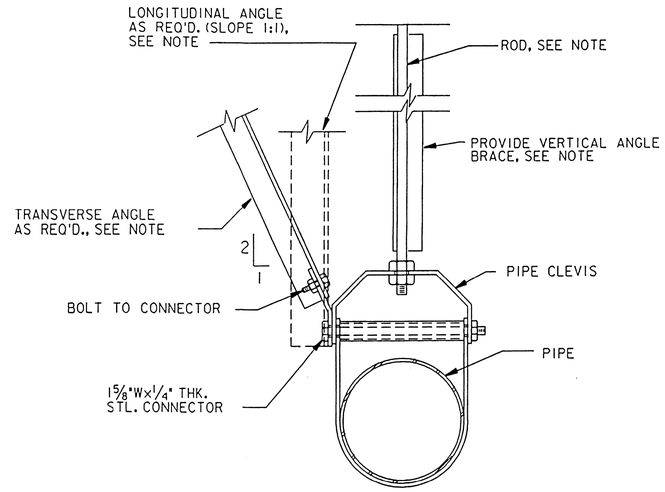

TRANSVERSE SWAY BRACING DETAIL (2 / M-13)

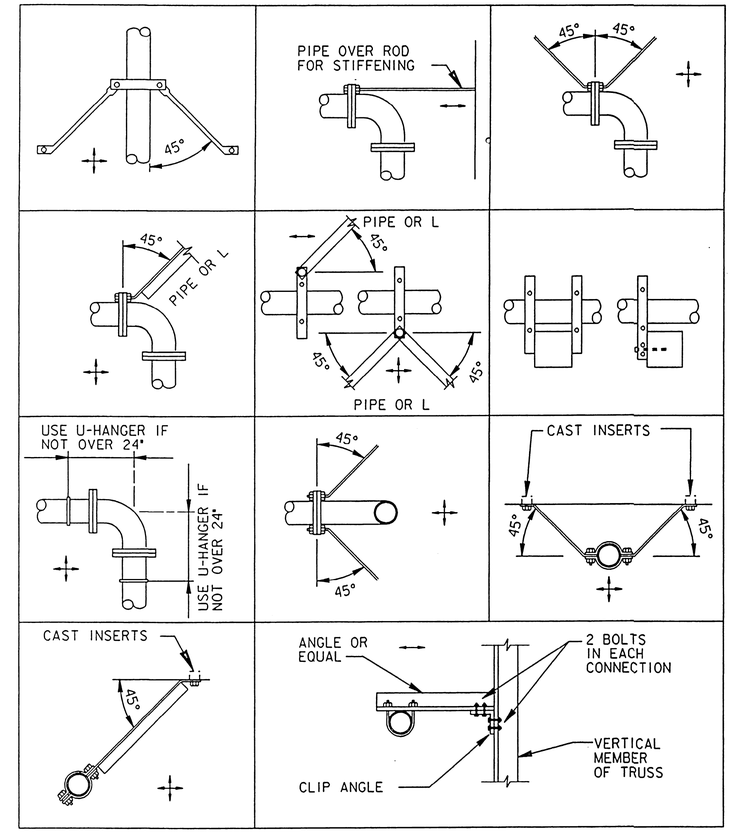

TRANSVERSE SWAY BRACING DETAIL (3 / M-13)

SCHEDULE "A" - BRACING OF RECTANGULAR DUCTS						
DUCT SIZE •	VERTICAL ANGLES	DIAGONAL ANGLES	HORIZONTAL ANGLES	LONGI-TUDINAL ANGLES	BOLT SIZE ••	WT. PER LINEAR FOOT
30" SQ.	2 1/2"x2 1/2"x16 GA	2 1/2"x2 1/2"x16 GA	2x2x16 GA	3x3x16 GA	1/4"ø	13
42" SQ.	4x4x16 GA	2 1/2"x2 1/2"x16 GA	2 1/2"x2 1/2"x16 GA	DO	3/8"ø	20
54" SQ.	4x4x12 GA	2 1/2"x2 1/2"x16 GA	2 1/2"x2 1/2"x16 GA	DO	3/8"ø	27
60" SQ.	4x4x12 GA	3x3x16 GA	3x3x16 GA	DO	3/8"ø	36
84" SQ.	4x4x1/4	4x4x14 GA	4x4x14 GA	DO	3/8"ø	53
96" SQ.	5x3x1/4	4x4x12 GA	4x4x12 GA	DO	1/2"ø	30

- • MAXIMUM DIMENSION OF DUCT SHALL GOVERN WHAT BRACING IS REQUIRED. EX: A 42"x32" DUCT SHALL BE BRACED AS A 42" SQUARE DUCT.
- •• MINIMUM EDGE DISTANCE FOR BOLTS:
  1/4"ø - 1" 5/8"ø - 1 1/8"
  3/8"ø - 1" 3/4"ø - 1 1/4"
  1/2"ø - 1" 7/8"ø - 1 1/2"

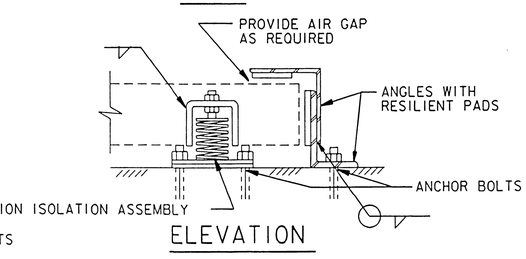

EQUIPMENT RESTRAINT DETAIL (5 / M-13)

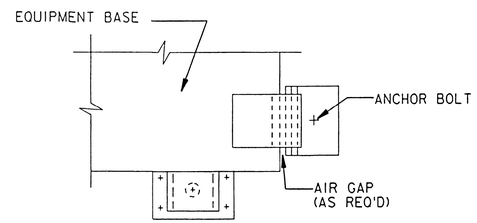

PLAN

ELEVATION

EQUIPMENT RESTRAINT DETAIL (4 / M-13)

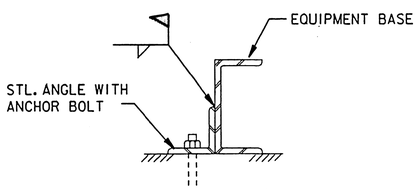

EQUIPMENT BRACE DETAIL (6 / M-13)

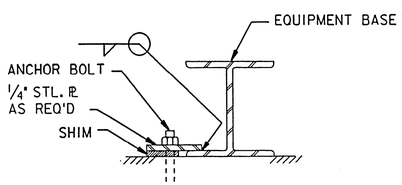

EQUIPMENT BRACE DETAIL (7 / M-13)

SCHEDULE "B" - TRANSVERSE BRACING FOR PIPE													
					MAXIMUM INTERVAL OF BRACES (FT.)								
					ZONE 1		ZONE 2		ZONE 3		ZONE 4		
PIPE SIZE (IN.)	BOLTS TO ANGLE	LONGITUDINAL TRANSVERSE, & VERTICAL ANGLES	ROD DIA. (IN.)	MAX. ROD LENGTH	40-S STEEL OR CAST IRON	COPPER TUBE	40-S STEEL OR CAST IRON	COPPER TUBE	40-S STEEL OR CAST IRON	COPPER TUBE	40-S STEEL OR CAST IRON	COPPER TUBE	
1	3/8"	1 1/2x1 1/2x3/16	3/8"	19"	29.7	14.85	27.5	13.75	24.2	12.1	22	11	
1 1/4	3/8"	1 1/2x1 1/2x3/16	3/8"	19"	29.7	16.2	27.5	13.75	24.2	12.1	22	11	
1 1/2	3/8"	1 1/2x1 1/2x3/16	3/8"	19"	33.75	18.9	31.25	15.0	27.5	13.2	25	12	
2	3/8"	1 1/2x1 1/2x3/16	1/2	25"	39.15	20.25	36.25	17.5	31.9	15.4	29	14	
2 1/2	3/8"	2x2x5/16	1/2	25"	43.2	22.95	40.0	18.75	35.2	16.5	32	15	
3	3/8"	2x2x5/16	1/2	25"	45.9	24.3	42.5	21.25	37.4	18.7	34	17	
3 1/2	3/8"	2x2x5/16	1/2	25"	48.6	25.65	45.0	22.5	39.6	19.8	36	18	
4	3/8"	2x2x5/16	5/8	31"	52.65	27.0	48.75	23.75	42.9	20.9	39	19	
5	1/2"	2x2x5/16	5/8	31"	55.35	29.7	51.25	25.0	45.1	22.0	41	20	
6	1/2"	2x2x5/16	3/4	37"	60.75	35.1	56.25	27.5	49.5	24.2	45	22	

NOTES:

ALL MATERIAL, EQUIPMENT, ACCESSORIES, BRACING AND CONNECTIONS SHALL BE INSTALLED IN ACCORDANCE WITH THE DETAILS AND NOTES SHOWN, AS WELL AS THE PROJECT SPECIFICATIONS SECTION: SEISMIC PROTECTION FOR MECHANICAL AND ELECTRICAL EQUIPMENT.

AS BUILT

NO SCALE-TYPICAL

CMT
CRAWFORD, MURPHY & TILLY, INC.

SYMBOL	DESCRIPTION	DATE	APPROVED

REVISIONS

U.S. ARMY ENGINEER DISTRICT, ST. LOUIS
CORPS OF ENGINEERS
ST. LOUIS, MISSOURI

DESIGNED BY: RJ
DRAWN BY: RJ
CHECKED BY: RJ
DATE: NOVEMBER, 1996
SUBMITTED:
DESIGN ENGINEER

UPPER MISSISSIPPI RIVER BASIN
MISSISSIPPI RIVER - ALTON, ILLINOIS
MELVIN PRICE LOCKS AND DAM
VISITOR CENTER
MECHANICAL
HVAC
SEISMIC
NOTES & DETAILS

SUBMITTED: GARY W. JONES, CHIEF, MECH./ELEC. SECTION
APPROVED: BOBBY R. MUGHEY, CHIEF, DESIGN BRANCH

SIZE D | DWG. CODE DACW 43 | DRAWING NO. M-MP-2/M-13

DESIGN FILE: n:\melprice\visitor\mpvcm013.dgn | PLOT DATE: 10-OCT-1996 13:59
PLOT SCALE: 8:1 | SOL. NO. DACW43-97-B-0204 | FILE NO.

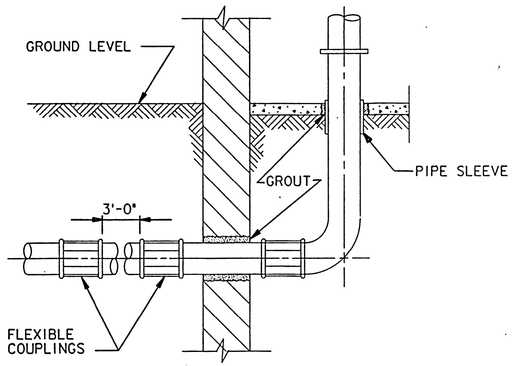

PIPE ENTRANCE TO BUILDING DETAIL (8 / M14)

N.T.S.

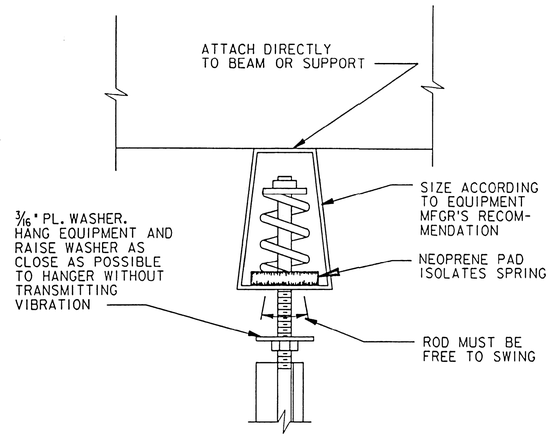

EQUIPMENT SUSPENSION DETAIL (9 / M14)

N.T.S.

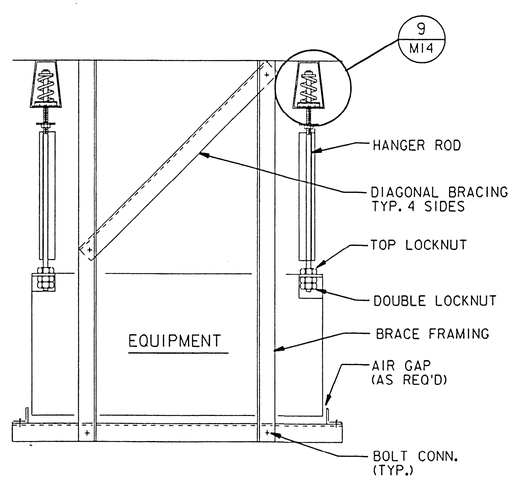

EQUIPMENT SUSPENSION DETAIL (10 / M14)

N.T.S.

NO SCALE - (TYPICAL)

NOTES:

1. ALL MATERIAL, EQUIPMENT, ACCESSORIES, BRACING AND CONNECTIONS SHALL BE INSTALLED IN ACCORDANCE WITH THE DETAILS AND NOTES SHOWN ON DWGS. M-13 & M-14, AS WELL AS THE PROJECT SPECIFICATIONS SECTION: SEISMIC PROTECTION FOR MECHANICAL AND ELECTRICAL EQUIPMENT.
2. ALL EQUIPMENT SHALL BE SECURED SO AS TO PREVENT LATERAL MOVEMENT DUE TO AN EARTHQUAKE. FRICTION SHALL NOT BE CONSIDERED AS A MEANS OF RESTRAINT. RESTRAINTS SHALL BE IN ACCORDANCE WITH OPERATING WEIGHTS.
3. THE PROJECT SPECIFICATIONS SECTION LISTS EXCLUSIONS FOR PIPING AND DUCTWORK INSTALLATIONS FOR WHICH SEISMIC RESTRAINTS MAY BE OMITTED. ANY INSTALLATION WHICH IS NOT SPECIFICALLY INCLUDED SHALL HAVE SEISMIC RESTRAINTS.
4. DETAILS SHOWN PROVIDE A LATERAL SEISMIC BRACING SYSTEM FOR DUCTWORK, PIPING, AND EQUIPMENT WHICH IS IN ADDITION TO VERTICAL SUPPORT SYSTEMS REQUIRED BY THE DRAWINGS AND PROJECT SPECIFICATIONS. HOWEVER, WHERE SEISMIC BRACING OCCURS, A VERTICAL BRACE MAY TAKE THE PLACE OF A VERTICAL SUPPORT.
5. EQUIPMENT WHICH IS RIGIDLY MOUNTED OR MOUNTED ON NEOPRENE PADS SHALL BE SECURED TO THE FLOOR WITH ANCHOR BOLTS AS LISTED IN THE PROJECT SPECIFICATIONS SECTION. IF EQUIPMENT IS MOUNTED ON NEOPRENE PADS, ANCHOR BOLT SHALL BE ISOLATED FROM EQUIPMENT BY A NEOPRENE SLEEVE AND WASHER.
6. SPRING MOUNTED EQUIPMENT ON THE GROUND SHALL BE SECURED USING SEISMIC SPRING ISOLATORS. ISOLATORS SHALL WITHSTAND 5g VERTICAL AND HORIZONTAL ALL-DIRECTIONAL LOAD AND SHALL BE SIZED AS PER EQUIPMENT MANUFACTURER'S RECOMMENDATIONS. EQUIPMENT SHALL BE LATERALLY BRACED USING THE METHOD SHOWN IN DETAILS NO. 4 THRU NO. 7 ON DWG. M-13.
7. SUSPENDED EQUIPMENT SHALL BE LATERALLY BRACED, WHETHER RIGIDLY MOUNTED OR SPRING MOUNTED, AS SHOWN IN DETAILS NO. 9 AND NO. 10.
8. FOR DUCTS REQUIRING SEISMIC BRACING, THE FREQUENCY SHALL BE AS FOLLOWS: TRANSVERSE BRACING SHALL BE INSTALLED AT EACH DUCT TURN, AT EACH END OF A DUCT RUN, AND ON STRAIGHT DUCT RUNS AT 30'-0" O.C. MAXIMUM. LONGITUDINAL BRACING SHALL OCCUR AT INTERVALS OF 60'-0" MAXIMUM. TRANSVERSE BRACING FOR ONE DUCT SECTION MAY ALSO ACT AS LONGITUDINAL BRACING FOR A DUCT SECTION CONNECTED PERPENDICULAR TO IT, PROVIDED THE BRACING IS INSTALLED WITHIN FOUR FEET OF THE INTERSECTION AND IS SIZED FOR THE LARGER DUCT.
9. INSTALLATION OF SEISMIC BRACING FOR DUCTS SHALL BE IN ACCORDANCE WITH DETAIL NO. 1 AND SCHEDULE "A" ON DWG. M-13.
10. WALLS, INCLUDING GYP-BOARD NON-BEARING PARTITIONS, WHICH HAVE DUCTS PASSING THROUGH THEM MAY REPLACE A TYPICAL TRANSVERSE SEISMIC BRACE.
11. THE INTERVAL BETWEEN TRANSVERSE SWAY BRACES ON PIPING SHALL NOT EXCEED THE LIMITS GIVEN IN TABLE II OF THE PROJECT SPECIFICATIONS SECTION. BRACING SHALL BE IN ACCORDANCE WITH SCHEDULE "B" ON DWG. M-13.
12. PROVIDE SEISMIC BRACES ON ALL PIPING 2½" AND LARGER.
13. TRANSVERSE BRACING FOR ONE PIPE SECTION MAY ALSO ACT AS LONGITUDINAL BRACING FOR A BRANCH PIPE SECTION CONNECTED PERPENDICULAR TO IT, PROVIDED THE BRACING IS LOCATED WITHIN 24" OF THE ELBOW OR TEE AND IT IS SIZED FOR THE LARGER PIPE.
14. BRANCH SECTIONS SHALL NOT BE USED AS BRACING FOR MAIN PIPE SECTIONS.
15. FLEXIBLE COUPLINGS SHALL BE PROVIDED IN ACCORDANCE WITH THE PROJECT SPECIFICATIONS SECTION AT THE BOTTOM OF RISERS LARGER THAN 3½" INSIDE DIAMETER. FLEXIBLE COUPLINGS SHALL ALSO BE PROVIDED WHERE PIPES PASS THROUGH BUILDING SEISMIC OR EXPANSION JOINTS, OR WHERE PIPES ARE RIGIDLY CONNECTED TO EQUIPMENT.
16. WHERE PRACTICAL TO DO SO, DUCTS AND PIPES NOT REQUIRING SEISMIC BRACING SHALL BE INSTALLED WITH A MINIMUM CLEARANCE OF 6" TO VERTICAL SUSPENDED CEILING HANGER WIRES.
17. PLACE STANDARD CUT LOCKWASHERS BETWEEN NUT AND ANGLE ON ALL BOLTED CONNECTIONS.
18. ALL STEEL USED FOR BRACING SHALL BY Fy = 33 ksi.
19. BETWEEN PANEL POINTS OF STEEL JOISTS, THE BOTTOM CHORD SHALL NOT SUPPORT OVER 50 LBS. WITHOUT ADEQUATE REINFORCING OF THE BOTTOM CHORD. NO VERTICAL LOAD SHALL BE IMPOSED ON JOIST BRIDGING.

AS BUILT

SYMBOL	DESCRIPTION	DATE	APPROVED

REVISIONS

U.S. ARMY ENGINEER DISTRICT, ST. LOUIS
CORPS OF ENGINEERS
ST. LOUIS, MISSOURI

DESIGNED BY: RJ
DRAWN BY: RJ
CHECKED BY: RJ
DATE: NOVEMBER, 1996

SUBMITTED: DESIGN ENGINEER

SUBMITTED: GARY M. JONES, CHIEF, MECH./ELEC. SECTION

APPROVED: BOBBY R. HUGHEY, CHIEF, DESIGN BRANCH

UPPER MISSISSIPPI RIVER BASIN
MISSISSIPPI RIVER - ALTON, ILLINOIS
MELVIN PRICE LOCKS AND DAM
VISITOR CENTER
MECHANICAL
HVAC
SEISMIC
NOTES & DETAILS

SIZE: D | DWG. CODE: DACW 43 | DRAWING NO. M-MP-2/M-14

DESIGN FILE: n:\melprice\visitor\mpvcm014.dgn | PLOT DATE: 10-OCT-1996 14:02
PLOT SCALE: 8:1 | SOL. NO. DACW43-97-B-0204 | FILE NO.

CMT
CRAWFORD, MURPHY & TILLY, INC.

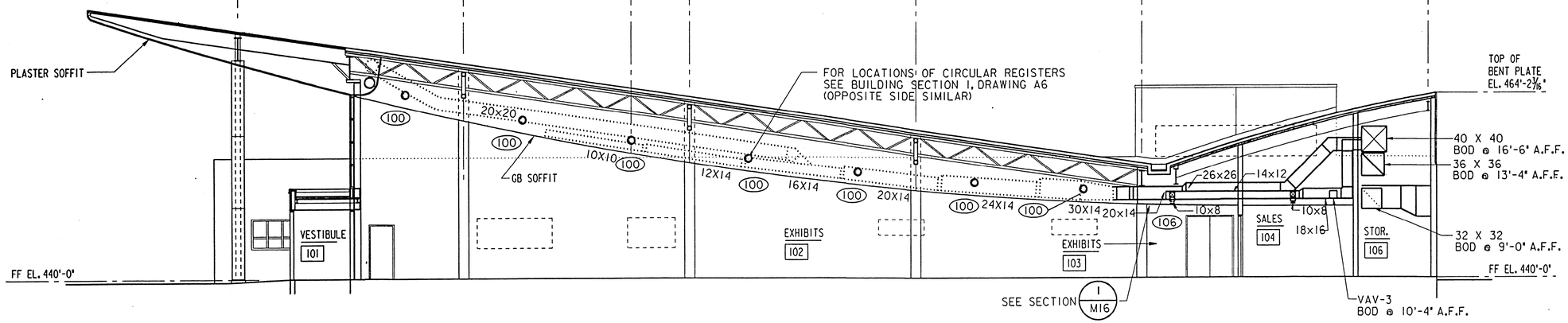

1/M15 BUILDING SECTION

1/8" = 1'-0" REF: M4

12" 0 5' 10' 15'

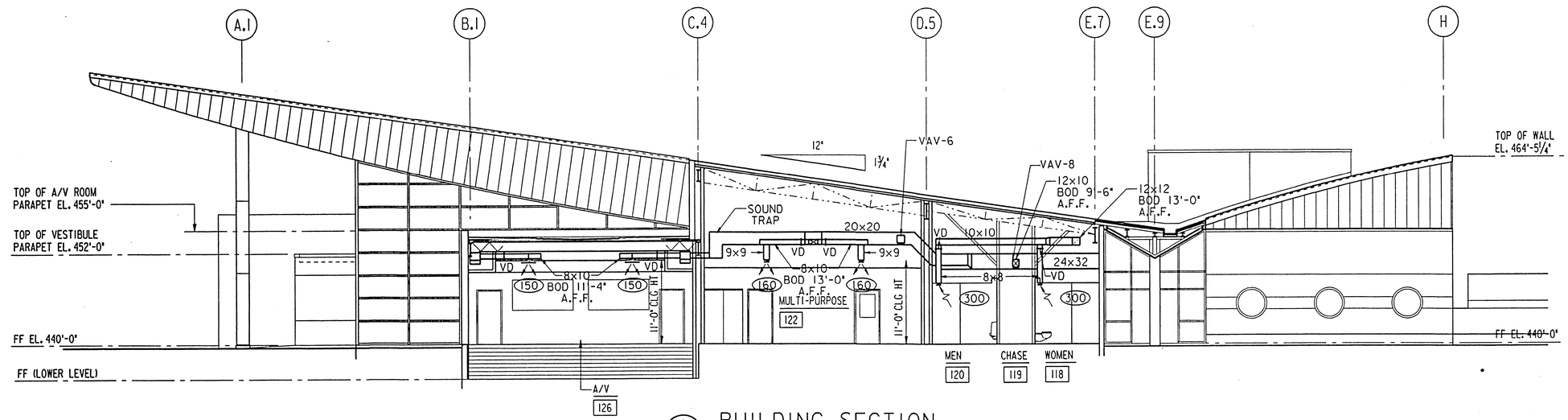

2/M15 BUILDING SECTION

1/8" = 1'-0" REF: M4

AS BUILT

SYMBOL	DESCRIPTION	DATE	APPROVED

REVISIONS

U.S. ARMY ENGINEER DISTRICT, ST. LOUIS
CORPS OF ENGINEERS
ST. LOUIS, MISSOURI

DESIGNED BY: SAS
DRAWN BY: DLB
CHECKED BY: RJ
DATE: NOVEMBER, 1996

UPPER MISSISSIPPI RIVER BASIN
MISSISSIPPI RIVER - ALTON, ILLINOIS
MELVIN PRICE LOCKS AND DAM
VISITOR CENTER
MECHANICAL

BUILDING SECTIONS

SUBMITTED:
DESIGN ENGINEER

SUBMITTED:
GARY M. JONES
CHIEF, MECH./ELEC. SECTION

APPROVED:
BOBBY R. MUGHEY
CHIEF, DESIGN BRANCH

SIZE: D | DWG. CODE: DACW 43 | DRAWING NO.: M-MP-2/M-15

DESIGN FILE: n:\melprice\visitor\mpvcm015.dgn | PLOT DATE: 10-OCT-1996 14:04

PLOT SCALE: 8:1 | SOL. NO. DACW43-97-B-0204 | FILE NO.

CMT
CRAWFORD, MURPHY & TILLY, INC.

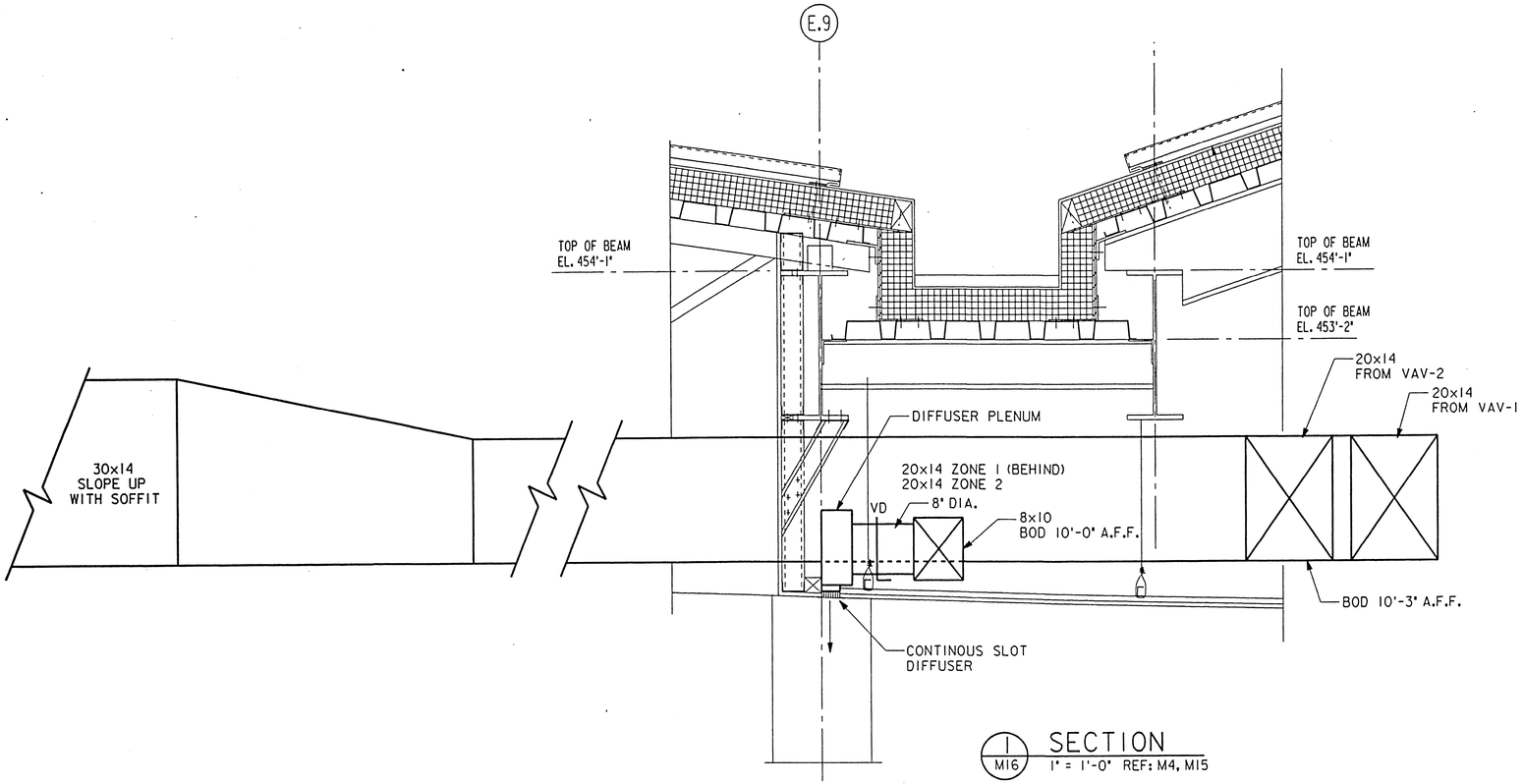

1 / M16 SECTION
1" = 1'-0" REF: M4, M15

AS BUILT

SYMBOL	DESCRIPTION	DATE	APPROVED

REVISIONS

U.S. ARMY ENGINEER DISTRICT, ST. LOUIS
CORPS OF ENGINEERS
ST. LOUIS, MISSOURI

DESIGNED BY: SAS
DRAWN BY: DLB
CHECKED BY: RJ
DATE: NOVEMBER, 1996

SUBMITTED:
DESIGN ENGINEER

UPPER MISSISSIPPI RIVER BASIN
MISSISSIPPI RIVER - ALTON, ILLINOIS
MELVIN PRICE LOCKS AND DAM
VISITOR CENTER
MECHANICAL

BUILDING SECTIONS

SUBMITTED:
GARY M. JONES
CHIEF, MECH/ELEC. SECTION

APPROVED:
BOBBY R. HUGHEY
CHIEF, DESIGN BRANCH

SIZE	DWG. CODE	DRAWING NO.
D	DACW 43	M-MP-2/M-16

DESIGN FILE: n:\melprice\visitor\mpvcm016.dgn | PLOT DATE: 10-OCT-1996 14:39
PLOT SCALE: 8:1 | SOL. NO. DACW43-97-B-0204 | FILE NO.

CMT
CRAWFORD, MURPHY & TILLY, INC.

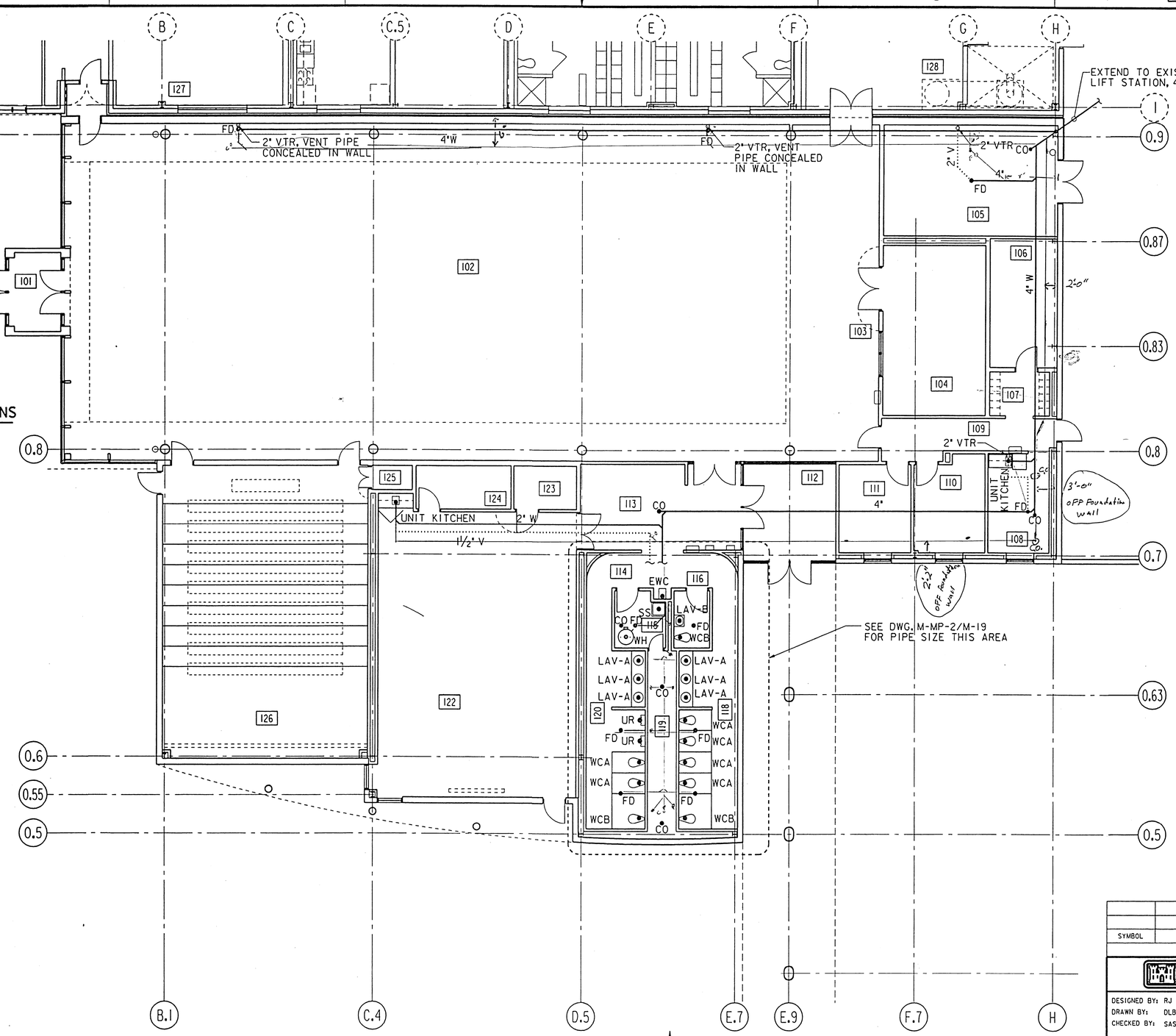

PLUMBING SYMBOLS & ABBREVIATIONS

GENERAL NOTES

1.) INSTALL THE PLUMBING SYSTEM IN ACCORDANCE WITH ILLINOIS PLUMBING CODE AND LOCAL CODES (LATEST VERSIONS).

2.) SLOPE HORIZONTAL VENTS AT 1/8" PER FOOT TO DRAIN BACK TOWARD DRAIN/WASTE PIPING.

3.) WASTE AND DRAIN PIPING SHALL BE INSTALLED A MINIMUM OF 12" BELOW BUILDING FLOOR SLAB (TO CENTER OF PIPE).

4.) REFER TO M-MP-2/M-24 FOR FLOOR DRAIN AND CLEANOUT DETAILS.

5.) WASTE AND DRAIN PIPING 3" AND SMALLER SHALL BE SLOPED AT 1/4" PER FOOT MINIMUM. WASTE AND DRAIN PIPING 4" AND LARGER SHALL BE SLOPED AT 1/8" PER FOOT MINIMUM.

ROOM SCHEDULE

ROOM NO.	ROOM NAME
101	VESTIBULE
102	EXHIBITS
103	RECEPTION
104	SALES
105	MECHANICAL
106	STORAGE
107	LOCKERS
108	BREAK
109	HALL
110	OFFICE
111	OFFICE
112	VESTIBULE
113	ALCOVE
114	ALCOVE
115	JANITOR
116	CHANGE
117	HALL
118	WOMEN
119	CHASE
120	MEN
121	HALL
122	MULTI-PURPOSE
123	CONTROL
124	STORAGE
125	STORAGE
126	AUDIO/VISUAL
127	ALCOVE
128	ALCOVE

AS BUILT

FLOOR PLAN

1/8" = 1'-0"

12" 0 5' 10' 15'

PLAN NORTH

SYMBOL	DESCRIPTION	DATE	APPROVED

REVISIONS

U.S. ARMY ENGINEER DISTRICT, ST. LOUIS
CORPS OF ENGINEERS
ST. LOUIS, MISSOURI

DESIGNED BY: RJ
DRAWN BY: DLB
CHECKED BY: SAS
DATE: NOVEMBER, 1996

UPPER MISSISSIPPI RIVER BASIN
MISSISSIPPI RIVER - ALTON, ILLINOIS
MELVIN PRICE LOCKS AND DAM
VISITOR CENTER
MECHANICAL

WASTE AND VENT LINE PLAN

SUBMITTED: DESIGN ENGINEER

SUBMITTED: GARY M. JONES, CHIEF, MECH./ELEC. SECTION

APPROVED: BOBBY R. HUGHEY, CHIEF, DESIGN BRANCH

SIZE: D | DWG. CODE: DACW 43 | DRAWING NO. M-MP-2/M-17

DESIGN FILE: ni\melprice\visitor\mpvcm017.dgn | PLOT DATE: 10-OCT-1996 14:43

PLOT SCALE: 8:1 | SOL. NO. DACW43-97-B-0204 | FILE NO.

CMT CRAWFORD, MURPHY & TILLY, INC.

NOTES

1.) PIPING ABOVE CEILING, DROP IN WALLS/CHASE
2.) INSULATE, SUPPLY PIPING PER SPECS.
3.) CONNECT TO FIXTURES PER MFR. INSTRUCTIONS
4.) SHUT OFF OR COCK @ ALL FIXTURES

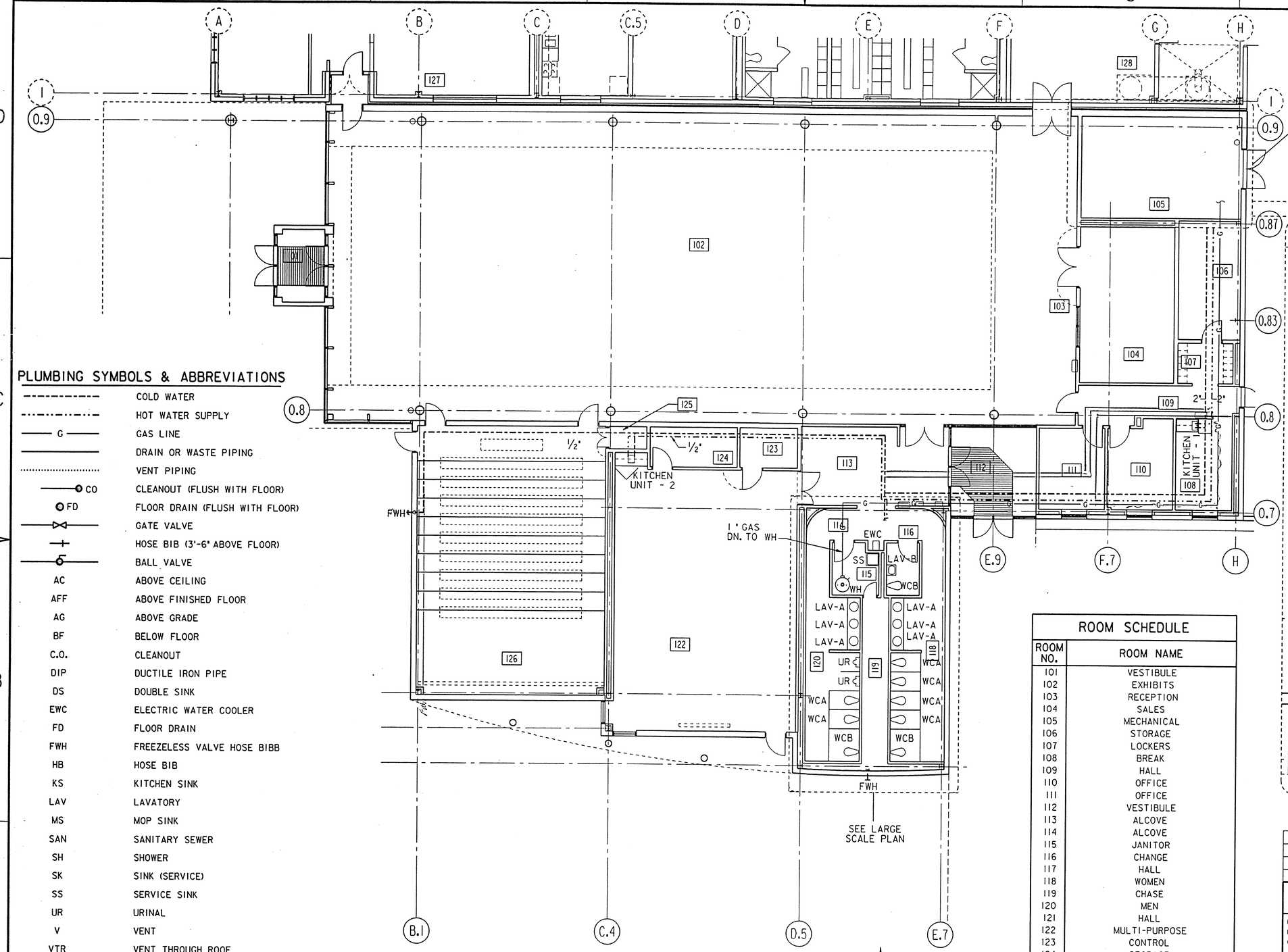

FLOOR PLAN

1/8" = 1'-0"

12"0 5' 10' 15'

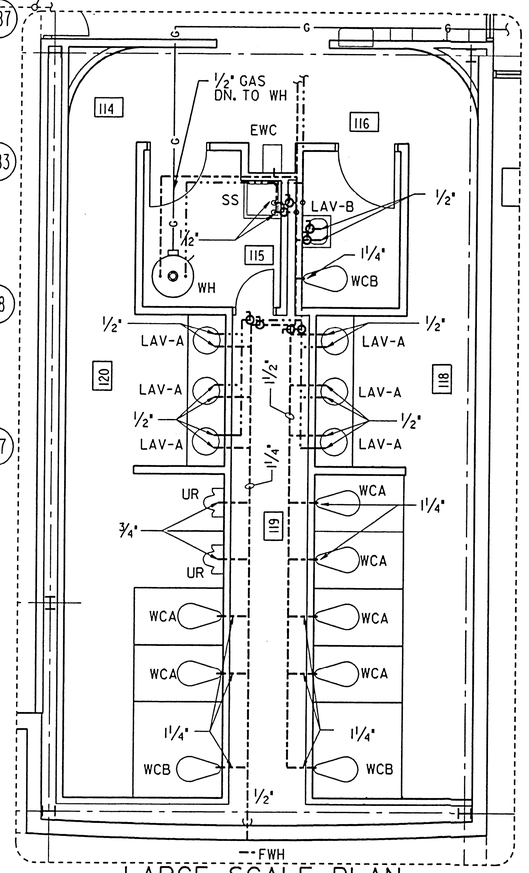

LARGE SCALE PLAN

1/4" = 1'-0"

PLUMBING SYMBOLS & ABBREVIATIONS

	COLD WATER
	HOT WATER SUPPLY
G	GAS LINE
	DRAIN OR WASTE PIPING
	VENT PIPING
CO	CLEANOUT (FLUSH WITH FLOOR)
FD	FLOOR DRAIN (FLUSH WITH FLOOR)
	GATE VALVE
	HOSE BIB (3'-6" ABOVE FLOOR)
	BALL VALVE
AC	ABOVE CEILING
AFF	ABOVE FINISHED FLOOR
AG	ABOVE GRADE
BF	BELOW FLOOR
C.O.	CLEANOUT
DIP	DUCTILE IRON PIPE
DS	DOUBLE SINK
EWC	ELECTRIC WATER COOLER
FD	FLOOR DRAIN
FWH	FREEZELESS VALVE HOSE BIBB
HB	HOSE BIB
KS	KITCHEN SINK
LAV	LAVATORY
MS	MOP SINK
SAN	SANITARY SEWER
SH	SHOWER
SK	SINK (SERVICE)
SS	SERVICE SINK
UR	URINAL
V	VENT
VTR	VENT THROUGH ROOF
W	WASTE OR DRAIN PIPING
WCA	WATER CLOSET
WCB	WATER CLOSET - HANDICAPPED ACCESSIBLE
WH	WATER HEATER
WHA	WATER HAMMER ARRESTOR
WSFU	WATER SUPPLY FIXTURE LIMITS

ROOM SCHEDULE

ROOM NO.	ROOM NAME
101	VESTIBULE
102	EXHIBITS
103	RECEPTION
104	SALES
105	MECHANICAL
106	STORAGE
107	LOCKERS
108	BREAK
109	HALL
110	OFFICE
111	OFFICE
112	VESTIBULE
113	ALCOVE
114	ALCOVE
115	JANITOR
116	CHANGE
117	HALL
118	WOMEN
119	CHASE
120	MEN
121	HALL
122	MULTI-PURPOSE
123	CONTROL
124	STORAGE
125	STORAGE
126	AUDIO/VISUAL
127	ALCOVE
128	ALCOVE

AS BUILT

CMT CRAWFORD, MURPHY & TILLY, INC.

SYMBOL	DESCRIPTION	DATE	APPROVED

REVISIONS

U.S. ARMY ENGINEER DISTRICT, ST. LOUIS
CORPS OF ENGINEERS
ST. LOUIS, MISSOURI

DESIGNED BY: RJ
DRAWN BY: DLB
CHECKED BY: SAS
DATE: NOVEMBER, 1996

SUBMITTED: DESIGN ENGINEER

SUBMITTED: GARY M. JONES, CHIEF, MECH./ELEC. SECTION

APPROVED: BOBBY R. HUCHEY, CHIEF, DESIGN BRANCH

UPPER MISSISSIPPI RIVER BASIN
MISSISSIPPI RIVER - ALTON, ILLINOIS
MELVIN PRICE LOCKS AND DAM
VISITOR CENTER
MECHANICAL

PLUMBING PLAN

SIZE: D | DWG. CODE: DACW 43 | DRAWING NO. M-MP-2/M-18

DESIGN FILE: n:\melprice\visitor\mpvcm018.dgn | PLOT DATE: 10-OCT-1996 14:46

PLOT SCALE: 8:1 | SOL. NO. DACW43-97-B-0204 | FILE NO.

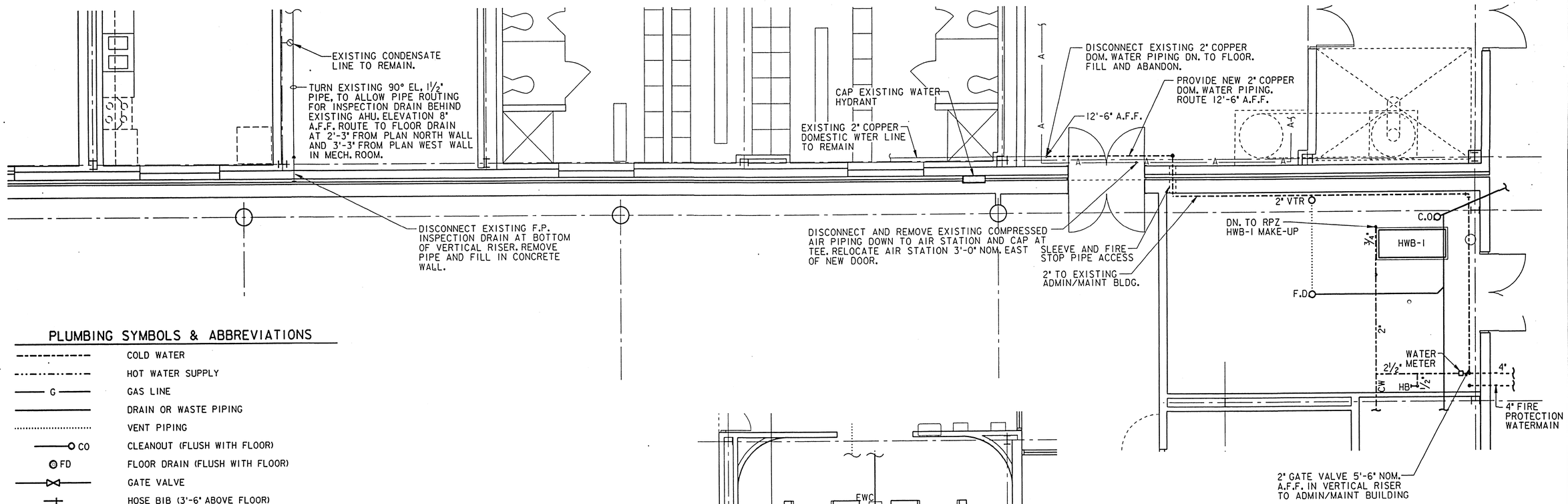

MECH. ROOM PLAN

SCALE: 1/4" = 1'-0"

PLUMBING SYMBOLS & ABBREVIATIONS

----------	COLD WATER
-·-·-·-	HOT WATER SUPPLY
—— G ——	GAS LINE
————	DRAIN OR WASTE PIPING
.....	VENT PIPING
—O CO	CLEANOUT (FLUSH WITH FLOOR)
◎ FD	FLOOR DRAIN (FLUSH WITH FLOOR)
—⋈—	GATE VALVE
—+	HOSE BIB (3'-6" ABOVE FLOOR)
—ʃ—	BALL VALVE
AC	ABOVE CEILING
AFF	ABOVE FINISHED FLOOR
AG	ABOVE GRADE
BF	BELOW FLOOR
C.O.	CLEANOUT
DIP	DUCTILE IRON PIPE
DS	DOUBLE SINK
EWC	ELECTRIC WATER COOLER
FD	FLOOR DRAIN
FWH	FREEZELESS VALVE HOSE BIBB
HB	HOSE BIB
KS	KITCHEN SINK
LAV	LAVATORY
MS	MOP SINK
SAN	SANITARY SEWER
SH	SHOWER
SK	SINK (SERVICE)
SS	SERVICE SINK
UR	URINAL
V	VENT
VTR	VENT THROUGH ROOF
W	WASTE OR DRAIN PIPING
WCA	WATER CLOSET
WCB	WATER CLOSET - HANDICAPPED ACCESSIBLE
WH	WATER HEATER
WHA	WATER HAMMER ARRESTOR
WSFU	WATER SUPPLY FIXTURE LIMITS

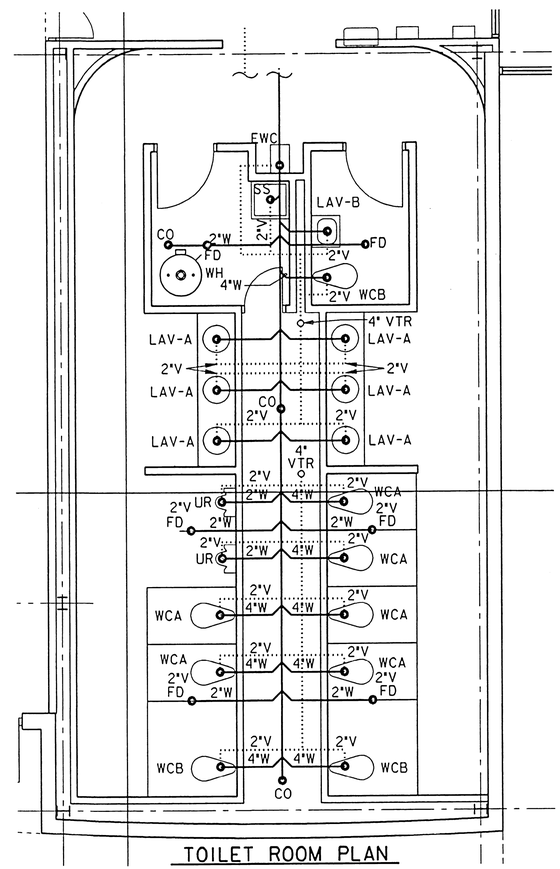

TOILET ROOM PLAN

SCALE: 1/4" = 1'-0"

AS BUILT

SYMBOL	DESCRIPTION	DATE	APPROVED

REVISIONS

U.S. ARMY ENGINEER DISTRICT, ST. LOUIS
CORPS OF ENGINEERS
ST. LOUIS, MISSOURI

DESIGNED BY: RJ/SAS
DRAWN BY: DLB
CHECKED BY: RJ
DATE: NOVEMBER, 1996

UPPER MISSISSIPPI RIVER BASIN
MISSISSIPPI RIVER - ALTON, ILLINOIS
MELVIN PRICE LOCKS AND DAM
VISITOR CENTER
MECHANICAL
PLUMBING PARTIAL
FLOOR PLANS

SUBMITTED: DESIGN ENGINEER
SUBMITTED: GARY M. JONES, CHIEF, MECH/ELEC SECTION
APPROVED: BOBBY R. HUGHEY, CHIEF, DESIGN BRANCH

SIZE: D | DWG. CODE: DACW 43 | DRAWING NO. M-MP-2/M-19

DESIGN FILE: n:\melprice\visitor\mpvcm019.dgn | PLOT DATE: 10-OCT-1996 14:50
PLOT SCALE: 4:1 | SOL. NO. DACW43-97-B-0204 | FILE NO.

CMT
CRAWFORD, MURPHY & TILLY, INC.

PLUMBING SYMBOLS & ABBREVIATIONS

- - - - - - - -	COLD WATER
- · - · - · - · -	HOT WATER SUPPLY
—— G ——	GAS LINE
————	DRAIN OR WASTE PIPING
.....	VENT PIPING
—o CO	CLEANOUT (FLUSH WITH FLOOR)
FD	FLOOR DRAIN (FLUSH WITH FLOOR)
—⋈—	GATE VALVE
—+—	HOSE BIB (3'-6" ABOVE FLOOR)
—ϽΣ—	BALL VALVE
AC	ABOVE CEILING
AFF	ABOVE FINISHED FLOOR
AG	ABOVE GRADE
BF	BELOW FLOOR
C.O.	CLEANOUT
DIP	DUCTILE IRON PIPE
DS	DOUBLE SINK
EWC	ELECTRIC WATER COOLER
FD	FLOOR DRAIN
FWH	FREEZELESS VALVE HOSE BIBB
HB	HOSE BIB
KS	KITCHEN SINK
LAV	LAVATORY
MS	MOP SINK
SAN	SANITARY SEWER
SH	SHOWER
SK	SINK (SERVICE)
SS	SERVICE SINK
UR	URINAL
V	VENT
VTR	VENT THROUGH ROOF
W	WASTE OR DRAIN PIPING
WCA	WATER CLOSET
WCB	WATER CLOSET - HANDICAPPED ACCESSIBLE
WH	WATER HEATER
WHA	WATER HAMMER ARRESTOR
WSFU	WATER SUPPLY FIXTURE LIMITS

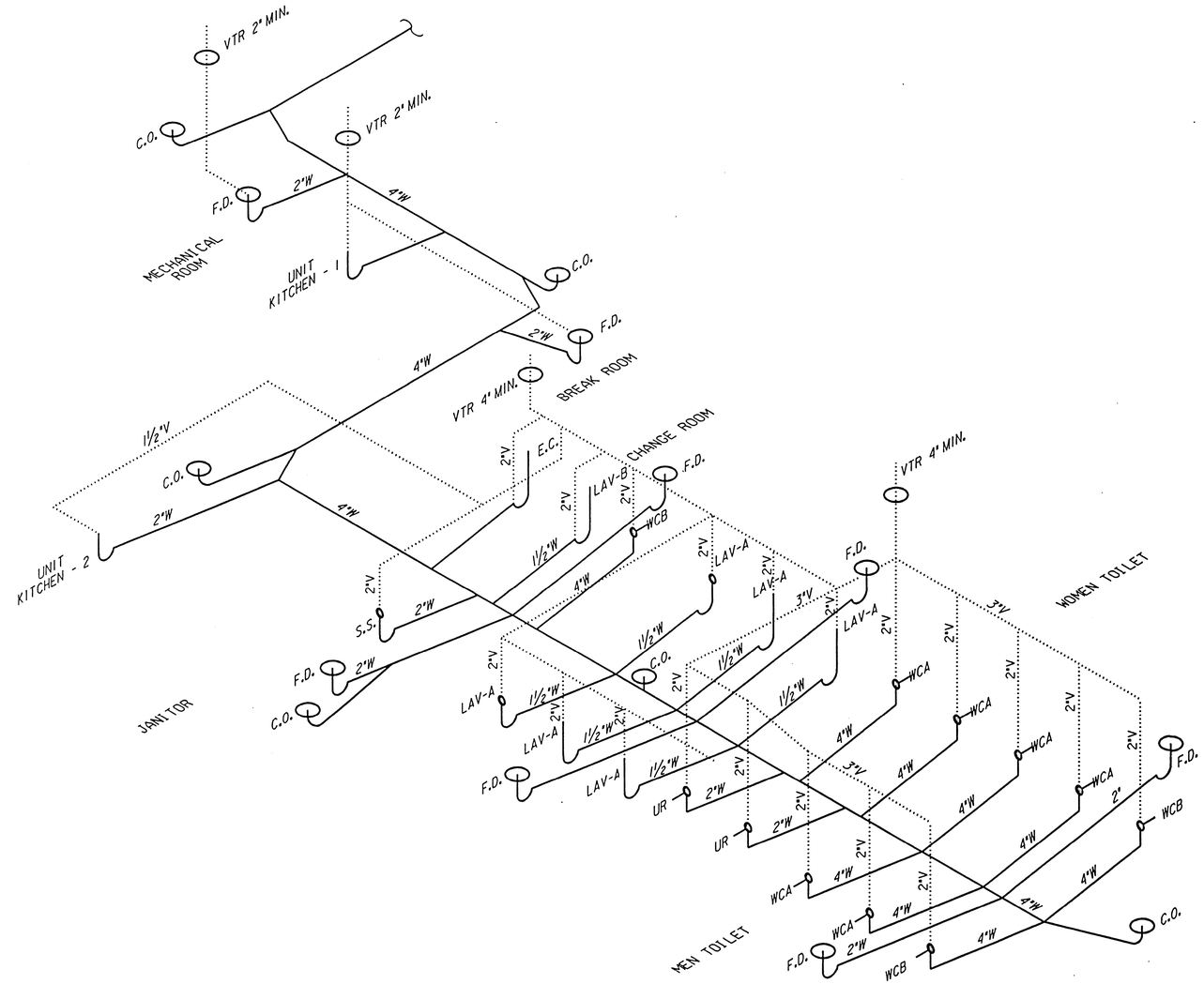

WASTE VENT ISOMETRIC
N.T.S.

AS BUILT

SYMBOL	DESCRIPTION	DATE	APPROVED

REVISIONS

U.S. ARMY ENGINEER DISTRICT, ST. LOUIS
CORPS OF ENGINEERS
ST. LOUIS, MISSOURI

DESIGNED BY: RJ
DRAWN BY: DLB
CHECKED BY: SAS
DATE: NOVEMBER, 1996

UPPER MISSISSIPPI RIVER BASIN
MISSISSIPPI RIVER - ALTON, ILLINOIS
MELVIN PRICE LOCKS AND DAM
VISITOR CENTER
PLUMBING
WASTE & VENT PIPING
SCHEMATIC

SUBMITTED:
DESIGN ENGINEER

SUBMITTED:
GARY M. JONES
CHIEF, MECH/ELEC. SECTION

APPROVED:
BOBBY R. MUGHEY
CHIEF, DESIGN BRANCH

SIZE: D | DWG. CODE: DACW 43 | DRAWING NO. M-MP-2/M-20

DESIGN FILE: n:\melprice\visitor\mpvcm020.dgn | PLOT DATE: 10-OCT-1996 14:52
PLOT SCALE: 1:1 | SOL. NO. DACW43-97-B-0204 | FILE NO.

CMT
CRAWFORD, MURPHY & TILLY, INC.

PLUMBING SYMBOLS & ABBREVIATIONS

- - - - - - - -	COLD WATER
- · - · - · - · -	HOT WATER SUPPLY
—— G ——	GAS LINE
————	DRAIN OR WASTE PIPING
.....	VENT PIPING
—— CO	CLEANOUT (FLUSH WITH FLOOR)
FD	FLOOR DRAIN (FLUSH WITH FLOOR)
—— ⋈ ——	GATE VALVE
—+—	HOSE BIB (3'-6" ABOVE FLOOR)
—— ⊂ ——	BALL VALVE
AC	ABOVE CEILING
AFF	ABOVE FINISHED FLOOR
AG	ABOVE GRADE
BF	BELOW FLOOR
C.O.	CLEANOUT
DIP	DUCTILE IRON PIPE
DS	DOUBLE SINK
EWC	ELECTRIC WATER COOLER
FD	FLOOR DRAIN
FWH	FREEZELESS VALVE HOSE BIBB
HB	HOSE BIB
KS	KITCHEN SINK
LAV	LAVATORY
MS	MOP SINK
SAN	SANITARY SEWER
SH	SHOWER
SK	SINK (SERVICE)
SS	SERVICE SINK
UR	URINAL
V	VENT
VTR	VENT THROUGH ROOF
W	WASTE OR DRAIN PIPING
WCA	WATER CLOSET
WCB	WATER CLOSET - HANDICAPPED ACCESSIBLE
WH	WATER HEATER
WHA	WATER HAMMER ARRESTOR
WSFU	WATER SUPPLY FIXTURE LIMITS

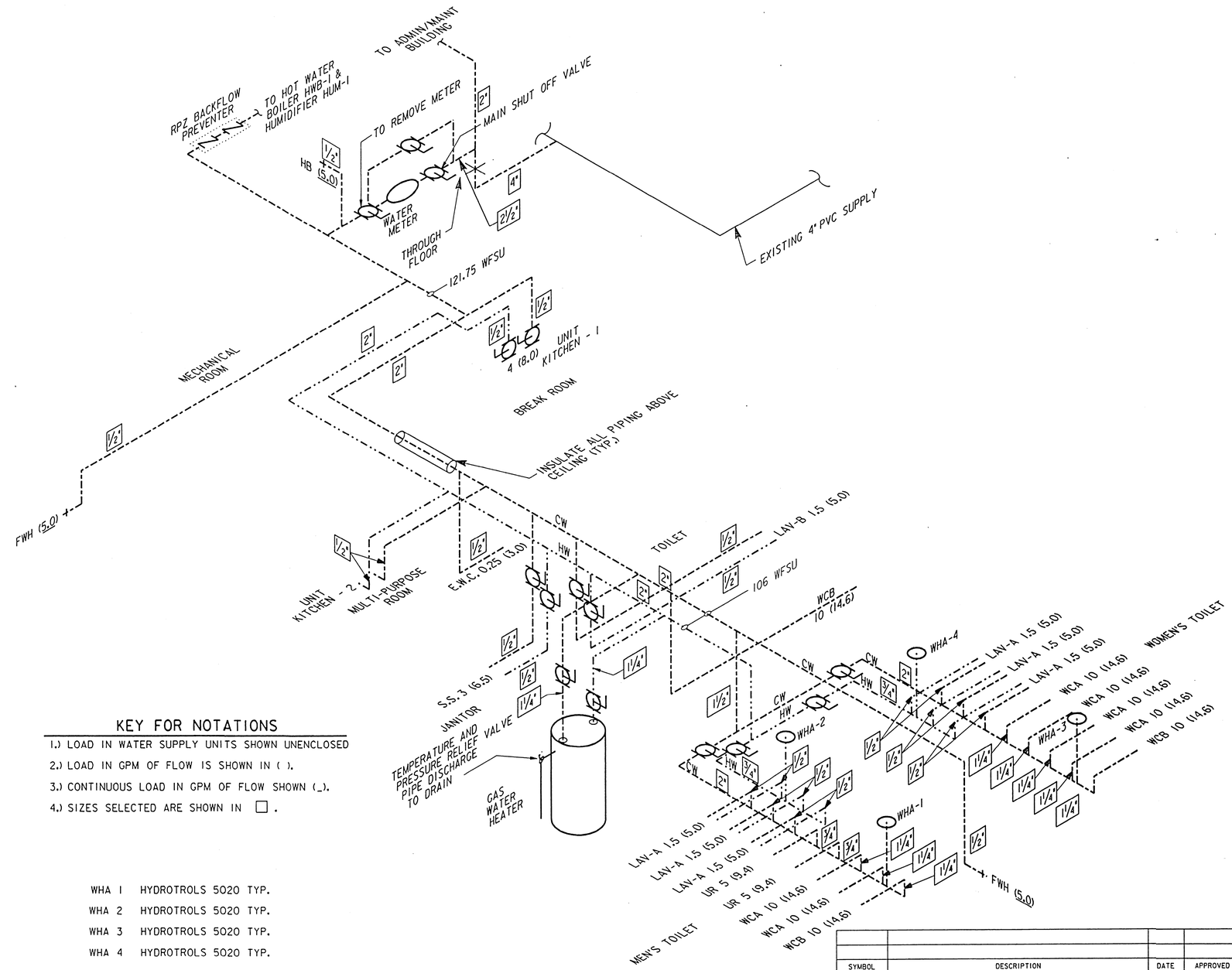

KEY FOR NOTATIONS

1.) LOAD IN WATER SUPPLY UNITS SHOWN UNENCLOSED
2.) LOAD IN GPM OF FLOW IS SHOWN IN ( ).
3.) CONTINUOUS LOAD IN GPM OF FLOW SHOWN (_).
4.) SIZES SELECTED ARE SHOWN IN □ .

WHA 1	HYDROTROLS 5020 TYP.
WHA 2	HYDROTROLS 5020 TYP.
WHA 3	HYDROTROLS 5020 TYP.
WHA 4	HYDROTROLS 5020 TYP.

WATER LINE SCHEMATIC
N.T.S.

AS BUILT

SYMBOL	DESCRIPTION	DATE	APPROVED

REVISIONS

U.S. ARMY ENGINEER DISTRICT, ST. LOUIS
CORPS OF ENGINEERS
ST. LOUIS, MISSOURI

DESIGNED BY: RJ
DRAWN BY: DLB
CHECKED BY: SAS
DATE: NOVEMBER, 1996

UPPER MISSISSIPPI RIVER BASIN
MISSISSIPPI RIVER - ALTON, ILLINOIS
MELVIN PRICE LOCKS AND DAM
VISITOR CENTER
PLUMBING

WATER LINE SCHEMATIC

SUBMITTED: DESIGN ENGINEER
SUBMITTED: GARY M. JONES, CHIEF, MECH./ELEC. SECTION
APPROVED: BOBBY R. HUGHEY, CHIEF, DESIGN BRANCH

SIZE: D | DWG. CODE: DACW 43 | DRAWING NO. M-MP-2/M-21

DESIGN FILE: n:\melprice\visitor\mpvcm021.dgn | PLOT DATE: 10-OCT-1996 14:54
PLOT SCALE: 1:1 | SOL. NO. DACW43-97-B-0204 | FILE NO.

CMT
CRANFORD, MURPHY & TILLY, INC.

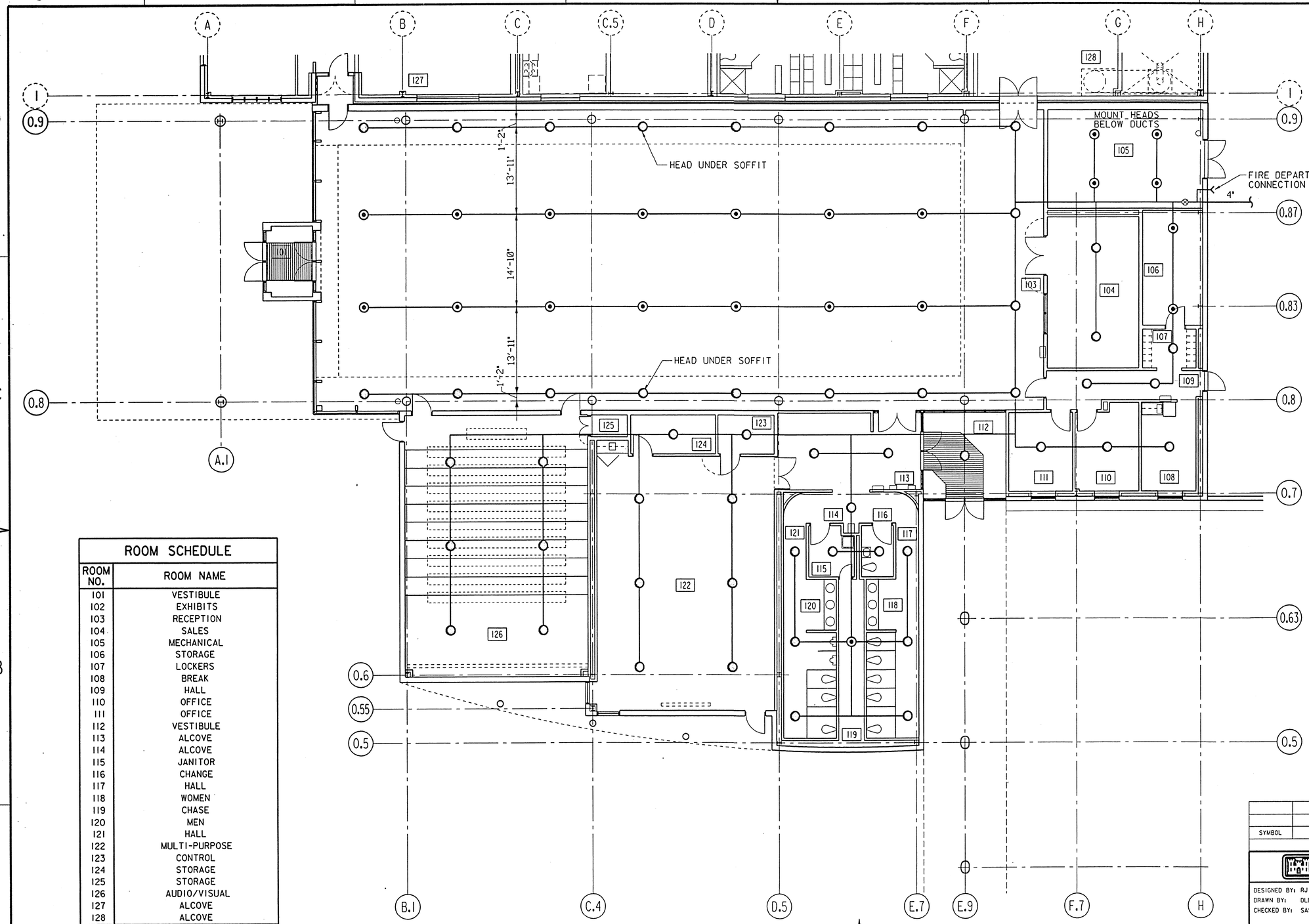

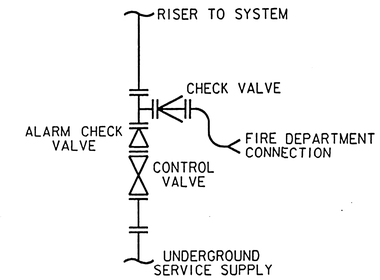

SINGLE RISER WITH ALARM CHECK VALVE
N.T.S.

NOTES

1.) BUILDING SPRINKLER SYSTEM SHALL BE DESIGNED AND INSTALLED IN ACCORDANCE WITH NFPA-13.

2.) MECHANICAL, ROOM 105, SHAL BE HYDRAULICALLY DESIGNED FOR A DENSITY OF 0-20 GPM/SQ. FT. OVER 200 SQ. FT. PLUS 250 GPM HOSE STREAM ALLOWANCE.

3.) BALANCE OF BUILDING SHALL BE HYDRAULICALLY DESIGNED FOR A DENSITY OF 0.10 GPM/SQ. FT. OVER 11,600 SQ. FT.

4.) PIPING INSTALLED AND BRACED FOR SEISMIC ZONE 2.

5.) ALL PIPE 2½" OR LARGER SHALL BE SCHEDULE 10 STEEL WITH GROOVED FITTINGS AND WELDED OUTLETS OR VIC. MECH. TEE.

6.) ALL PIPE 2" OR SMALLER SHALL BE SCHEDULE 40 STEEL WITH THREADED ENDS AND SCREWED 125 LBS. CAST IRON FITTINGS.

7.) ALL SPRINKLER HEADS, PIPE MAINS AND BRANCH RUNS SHALL BE INSTALLED IN ACCORDANCE WITH NFPA-13 AND FIRE CODE.

8.) DRAWING INDICATES SUGGESTED PIPE ROUTING. SPRINKLER.

9.) LOCATE HEADS ABOVE BOTTOM OF TRUSS.

LEGEND

- UPRIGHT SPRINKLER - NIPPLE UP
- PENDENT SPRINKLER - DROP NIPPLE
- RISER

CONTRACTOR TO COORDINATE PIPE ROUTING. SIZE AND PIPE LOCATION TO AVOID INTERFERENCE WITH BUILDING STEEL AND SYSTEMS.

ROOM SCHEDULE

ROOM NO.	ROOM NAME
101	VESTIBULE
102	EXHIBITS
103	RECEPTION
104	SALES
105	MECHANICAL
106	STORAGE
107	LOCKERS
108	BREAK
109	HALL
110	OFFICE
111	OFFICE
112	VESTIBULE
113	ALCOVE
114	ALCOVE
115	JANITOR
116	CHANGE
117	HALL
118	WOMEN
119	CHASE
120	MEN
121	HALL
122	MULTI-PURPOSE
123	CONTROL
124	STORAGE
125	STORAGE
126	AUDIO/VISUAL
127	ALCOVE
128	ALCOVE

FLOOR PLAN
⅛" = 1'-0"
12" 0 5' 10' 15'

PLAN NORTH

AS BUILT

SYMBOL	DESCRIPTION	DATE	APPROVED

REVISIONS

U.S. ARMY ENGINEER DISTRICT, ST. LOUIS
CORPS OF ENGINEERS
ST. LOUIS, MISSOURI

DESIGNED BY: RJ
DRAWN BY: DLB
CHECKED BY: SAS
DATE: NOVEMBER, 1996

UPPER MISSISSIPPI RIVER BASIN
MISSISSIPPI RIVER - ALTON, ILLINOIS
MELVIN PRICE LOCKS AND DAM
VISITOR CENTER
MECHANICAL

FIRE PROTECTION FLOOR PLAN

SUBMITTED:
DESIGN ENGINEER

SUBMITTED: GARY M. JONES
CHIEF, MECH/ELEC. SECTION

APPROVED: BOBBY R. MUGHEY
CHIEF, DESIGN BRANCH

CMT
CRAWFORD, MURPHY & TILLY, INC.

SIZE	DWG. CODE	DRAWING NO.
D	DACW 43	M-MP-2/M-22

DESIGN FILE: n:\melprice\visitor\mpvcm022.dgn | PLOT DATE: 10-OCT-1996 14:56
PLOT SCALE: 8:1 | SOL. NO. DACW43-97-B-0204 | FILE NO.

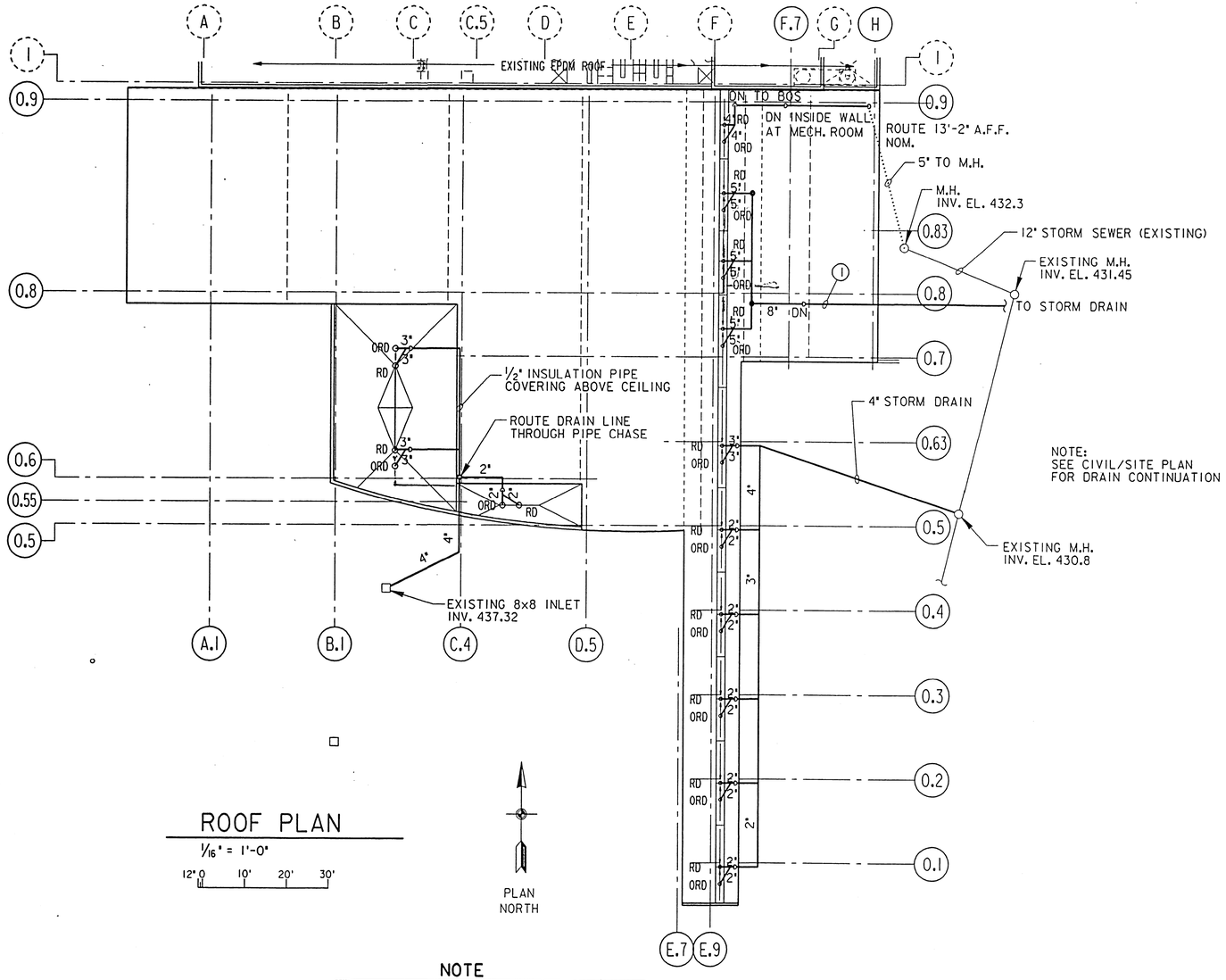

ROOF PLAN

1/16" = 1'-0"

12" 0 10' 20' 30'

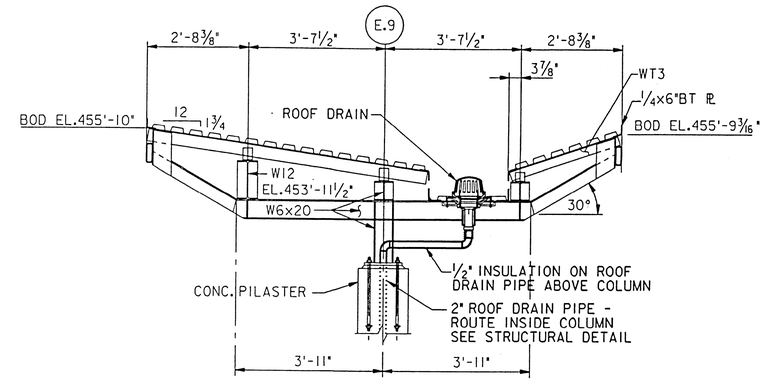

SECTION

1 / M-23

SCALE: ½" = 1'-0"

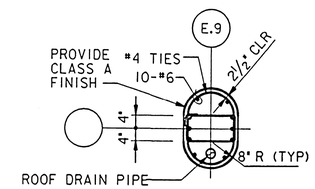

ROOF/CANOPY - ROOF DRAIN DETAIL

SCALE: ½" = 1'-0"

12" 0 1' 2' 3' 4'

NOTE

1.) ½" INSULATION ON STORM WATER DRAIN ABOVE CEILING AND IN PIPE CHASE.

2.) SEE MANHOLE LOCATION AND ELEVATIONS ON CIVIL DWGS. C-10 AND C-11.

3.) ROUTE ROOF DRAIN IN SOFFIT, A/V ROOM. DROP ROOF DRAIN PIPE IN CHASE, SEE DRAWING A-18 FOR COORDINATION.

AS BUILT

SYMBOL	DESCRIPTION	DATE	APPROVED

REVISIONS

U.S. ARMY ENGINEER DISTRICT, ST. LOUIS
CORPS OF ENGINEERS
ST. LOUIS, MISSOURI

DESIGNED BY: RJ
DRAWN BY: DLB
CHECKED BY: SS
DATE: NOVEMBER, 1996
SUBMITTED:
DESIGN ENGINEER
SUBMITTED: GARY M. JONES
CHIEF, MECH./ELEC. SECTION
APPROVED: BOBBY R. MUCHEY
CHIEF, DESIGN BRANCH

UPPER MISSISSIPPI RIVER BASIN
MISSISSIPPI RIVER - ALTON, ILLINOIS
MELVIN PRICE LOCKS AND DAM
VISITOR CENTER
MECHANICAL

ROOF DRAIN PLAN

SIZE	DWG. CODE	DRAWING NO.
D	DACW 43	M-MP-2/M-23

DESIGN FILE: n:\melprice\visitor\mpvcm023.dgn | PLOT DATE: 10-OCT-1996 14:58
PLOT SCALE: 16:1 | SOL. NO. DACW43-97-B-0204 | FILE NO.

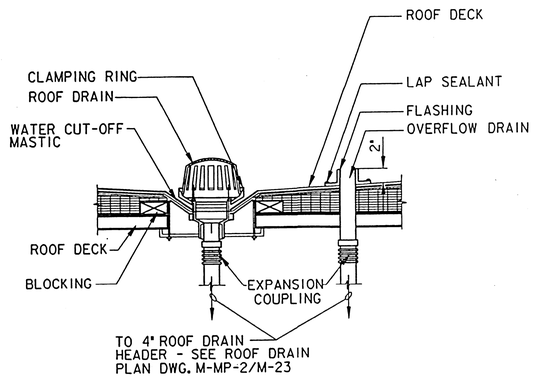

ROOF DRAIN W/ OVERFLOW DRAIN (6)

1½" = 1'-0"

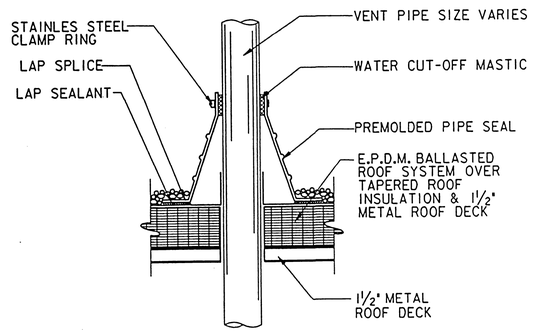

VENT PIPE FLASHING DETAIL (7)

1½" = 1'-0"

NOTE : WHERE CLEANOUT OR FLOOR DRAIN IS INSTALLED ON UPSTREAM END OF A RUN, A LONG SWEEP ELBOW OR TWO - 45° BENDS SHALL BE USED TO CONNECT TO HORIZONTAL PIPING.

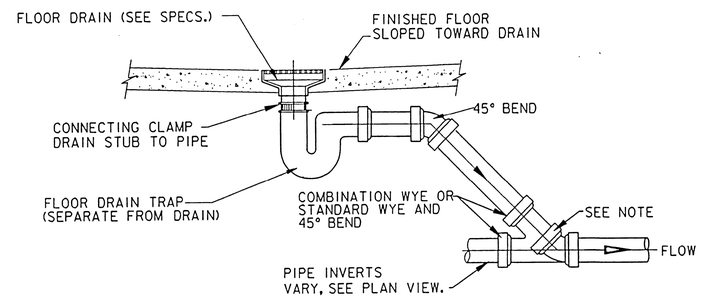

FLOOR DRAIN DETAIL

N.T.S.

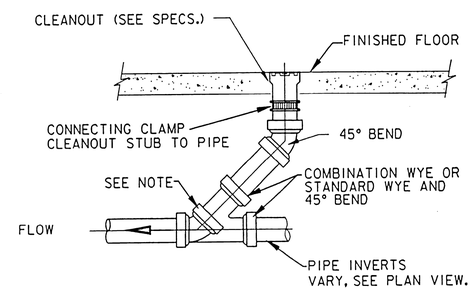

CLEANOUT DETAIL

N.T.S.

NOTE :
WHERE CLEANOUT OR FLOOR DRAIN IS INSTALLED ON UPSTREAM END OF A RUN, A LONG SWEEP ELBOW OR TWO - 45° BENDS SHALL BE USED TO CONNECT TO HORIZONTAL PIPING.

AS BUILT

SYMBOL	DESCRIPTION	DATE	APPROVED

REVISIONS

U.S. ARMY ENGINEER DISTRICT, ST. LOUIS
CORPS OF ENGINEERS
ST. LOUIS, MISSOURI

DESIGNED BY: RJ
DRAWN BY: DLB
CHECKED BY: SS
DATE: NOVEMBER, 1996

SUBMITTED:
DESIGN ENGINEER

SUBMITTED:
GARY M. JONES
CHIEF, MECH./ELEC. SECTION

APPROVED:
BOBBY R. HUGHEY
CHIEF, DESIGN BRANCH

UPPER MISSISSIPPI RIVER BASIN
MISSISSIPPI RIVER - ALTON, ILLINOIS
MELVIN PRICE LOCKS AND DAM
VISITOR CENTER
MECHANICAL

PLUMBING FIXTURE DETAILS

SIZE	DWG. CODE	DRAWING NO.
D	DACW 43	M-MP-2/M-24

DESIGN FILE: ni\melprice\visitor\mpvcm024.dgn | PLOT DATE: 10-OCT-1996 15:00
PLOT SCALE: 4:1 | SOL. NO. DACW43-97-B-0204 | FILE NO.

CMT
CRAWFORD, MURPHY & TILLY, INC.

APPENDIX B

PUMP/VALVE DESIGNATIONS

One - Bell & Gossett Model IAS-2-1/2 In-Line Air Separator.
TAG: Hot Water

One - Bell & Gossett Model R-3 Rolairtrol Air Separator.
TAG: Chilled Water

One - Bell & Gossett Model IAS-2-1/2" In-Line Air Separator.
TAG: Heat Recovery

One - Bell & Gossett Model TF-4 Thermoflo Indicator.
TAG: Chilled Water

One - Bell & Gossett Model 790-30 Relief Valve.
TAG: Boiler Loop

Four - Bell & Gossett Model 67 Automatic Air Vents.

Two - Bell & Gossett Model 60-2AA Bronze Fitted, In-Line Pumps with a 3/4 HP, 208 Volt, 3 Phase, 1750 RPM, ODP Motor.
Capacity: 62 GPM @ 26' TDH
TAG: HWP-1A & 1B

Two - Bell & Gossett Model 80-3x3x7B Bronze Fitted, In-Line Pumps with a 1-1/2 HP, 208 Volt, 3 Phase, 1750 RPM, ODP Motor.
Capacity Each: 172 GPM @ 28' TDH
TAG: CHWP-1A & 1B

One - Bell & Gossett Model 60-1AA Bronze Fitted, In-Line Pump with a 1/4 HP, 120 Volt, 1 Phase, 1750 RPM, ODP Motor.
Capacity: 12 GPM @ 14' TDH
TAG: CP-1

One - Bell & Gossett Model 60-1-1/4AA Bronze Fitted, In-Line Pump with a 1/3 HP, 120 Volt, 1 Phase, 1750 RPM, ODP Motor.
Capacity: 43 GPM @ 12' TDH
TAG: CP-2

One - Bell & Gossett Model 100 NFI Iron Body Booster Pump with a 1/12 HP, 120 Volt, 1 Phase, 1750 RPM, ODP Motor.
Capacity: 11 GPM @ 4.8' TDH
TAG: CP-3

MARKING CODE

-MATERIAL-

One - Bell & Gossett Model 60-1AA Bronze Fitted, In-Line Pump with a 1/4 HP, 120 Volt, 1 Phase, 1750 RPM, ODP Motor.
Capacity: 29.5 GPM @ 9' TDH
TAG: CP-4

One - Bell & Gossett Model 80-2x2x7 Bronze Fitted, In-Line Pump with a 3/4 HP, 208 Volt, 3 Phase, 1750 RPM, ODP Motor.
Capacity: 50 GPM @ 20' TDH
TAG: HRP-1

One - Bell & Gossett Model LR-15B All Bronze Booster Pump with a 1/12 HP, 115 Volt, 1 Phase, 1750 RPM, ODP Motor.
TAG: DHWP-1

Four - Bell & Gossett Model 3DS-2S Triple Duty Valves.
TAG: HWP-1A, 1B; CP-2; HRP-1

Two - Bell & Gossett Model 3DS-2-1/2S Triple Duty Valves.
TAG: CHWP-1A, 1B

Two - Bell & Gossett Model 3DX-1-1/2" Triple Duty Valves.
TAG: DHWP-1; CP-4

One - Bell & Gossett Model 3DX-1-1/4" Triple Duty Valve.
TAG: CP-1

One - Bell & Gossett Model 3DX-1" Triple Duty Valve.
TAG: CP-3

One - Bell & Gossett Model D-80V Vertical Diaphragm Type Expansion Tank.
TAG: Hot Water

Two - Bell & Gossett Model D-15 Diaphragm Type Expansion Tank.
TAG: Chilled Water & Heat Recovery

22 - Bell & Gossett Model CB-3/4" Circuit Setters.

One - Bell & Gossett CB-1-1/2" Circuit Setters.

Four - Thermo-Tech Model F/F/FI-3" Flexible Connectors.

JOB: MELVIN PRICE VISITOR CENTER

ENGINEER: Crawford, Murphy & Tilly

CONTRACTOR: Modern Wholesale

ORDER NO. 3406

blackmore and glunt, Inc.
12 KIMLER, MARYLAND HEIGHTS, MO 63043
314-878-4313

3/21/2

PREPARED BY John Schmidt DATE 3-24-97

Heatway

1 Set -	1-1/4" Manifolds with Automatic Air Vents, Drain Valves and Balancing Valves.
2400 -	Cable Ties
Four -	Manifold Mounting Brackets.
One -	Hose Unwinder
One -	Pressure Test Kit.
3600 ft.-	3/4" Entran III
One -	Hydro Control Panel.

JOB: MELVIN PRICE VISITOR CENTER

ENGINEER: Crawford, Murphy & Tilly

CONTRACTOR: Modern Wholesale

ORDER NO. 3406

blackmore and glunt, inc.
12 KIMLER MARYLAND HEIGHTS MO 63043
314-878-4313

3/21/2

PREPARED BY John Schmidt DATE 3-24-97

APPENDIX C

DESCRIPTION OF OPERATIONS, SYSTEM DIAGRAMS, VALVE SCHEDULE, AND DAMPER SCHEDULE

Melvin Price Visitor Center
RD2330

August 12, 1997

Description of Operation

Hot Water System Control

The controller furnished by the temperature control manufacturer shall enable the boiler to run, and start the primary hot water pumps, HWP-1A, HWP-1B, and the secondary hot water loop pumps CP-1 and CP-2 when the outside air temperature drops below 60 DEGF (adjustable). Above 65 DEGF (adjustable) outside air temperature the boiler will be disabled and the hot water pumps will be stopped. When the boiler is enabled, the controls furnished by the boiler manufacturer will maintain the hot water supply temperature setpoint. There is no occupied/unoccupied control furnished for this hot water system.

Primary Hot Water Pump Control

Only one primary hot water pump (HWP-1A, HWP-1B) needs to run at any one time. The temperature controller will start both of these pumps at the same time so it will be the operators responsibility to put the lead pump in the automatic mode and to manually turn off the lag pump. Upon a failure of the lead pump it will be the operators responsibility to manually turn off the lead pump and to place the lag pump in the automatic mode.

Chilled Water System Control

The chilled water system will be manually enabled by a switch located on the front of the control panel. When the system is enabled and the air handling unit is on the chilled water pumps will be enabled to run and the chiller will be enabled. When the chiller is enabled it will run under is own controls. Only one chilled water pump (CWP-1A, CWP-1B) needs to run at any one time. The temperature controller will start both of these pumps at the same time so it will be the operators responsibility to put the lead pump in the automatic mode and to manually turn off the lag pump. Upon a failure of the lead pump it will be the operators responsibility to manually turn off the lead pump and to place the lag pump in the automatic mode.

Slab Heating Control

The controls for this system are furnished by others. A control valve(CV-4) with a incremental actuator is being furnished as required. It is anticipated that the controls being furnished by others will start/stop hot water pump CP-3, and control valve CV-4.

AHU Control

Occupied/Unoccupied Control

In the occupied mode the supply and return fan will run at all times. In the unoccupied mode the supply and return fans will be started when the space temperature drops below 60 DEGF (adjustable) or exceeds 80 DEGF (adjustable). There will be a fixed 3 DEGF differential between the when the fan is turned on and when the fan is turned off in the unoccupied mode. A light located on the front of the panel will light when the system is in the occupied mode.

Occupied/Unoccupied and Ventilation Control

The temperature controller being furnished has a built in time clock. To make sure the space temperature is at the occupied setpoint, when the system switches from unoccupied to occupied mode, the controller can start the supply and return fans up to 2 hours prior to the occupancy time based on the space and outside air temperature. When the system is started prior to the occupancy time, the outside air damper will be held closed, the return air damper will be held full open, and the ventilation light will be turned on. At the occupancy time the outside & return air dampers will be allowed to modulate as needed, the ventilation light will be turned off and the occupancy light will be turned on.

Fan Safety Controls

The fan safety controls for this fan consist of a low temperature protection thermostat (TSL-1) and a discharge smoke detector(DSD-1). If the air entering the heating coil drops below 38 DEGF (as sensed by TSL-1) or if smoke is detected in the supply air duct(as sensed by DSD-1) the supply fan will be shut down and all control devices will assume their fail safe positions. Fail safe positions are defined as follows:

Outside Air Damper -	Closed
Exhaust Air Damper -	Closed
Return Air Damper -	Open
Heat Recovery Dampers OED & EED -	Closed
Heating Coil Valve CV-2 -	Full HW Flow thru Coil
Cooling Coil Valve (CV-1) -	Full CW Flow to By-pass Coil
Supply Fan -	Off

When TSL-1 trips a pilot light labeled "Low Temperature " located on the face of the panel, will light. In order to restart the fan, the operator will have to push the manual reset button on TSL-1 and then push the "Low Temperature Reset" switch located on the front of the panel. When DSD-1 trips a pilot light labeled "Emergency Shutdown " located on the face of the panel will light. In order to restart the fan the operator will have to reset DSD-1 and then push the "Emergency Shutdown Reset" switch located on the front of the panel.

Economizer Control

The economizer cycle will be enabled when ever the outside air temperature is below the return air temperature. When the outside air temperature is above the return air temperature the economizer cycle will be disabled. When the fan is on and the economizer cycle is enabled, a pilot light(located on the front of the control panel) will be turned on. When the fan is off or the economizer cycle is disabled, the pilot light will be turned off.

Discharge Air Setpoint Control

The discharge air setpoint will be reset be the return air temperature as follows; when the return air is at 68 DEGF the discharge air setpoint will be 95 DEGF, When the return air

temperature is at 76 DEGF the supply air setpoint will be 55 DEGF. This schedule will be adjustable.

Discharge Air Control

When the supply fan is on and the economizer is on the heating coil valve, the mixed air dampers and the chilled water coil valve will be controlled in sequence to maintain the discharge air setpoint. When the economizer is off the hot and chilled water valves will be controlled in sequence to maintain the discharge air setpoint and the mixed air dampers will be commanded to minimum position. When the supply fan is off all controlled devices will be commanded to their fail safe positions. When the economizer is enabled a mixed air low limit control will override the discharge air control to keep the mixed air temperature above 45 DEGF.

Heating Coil Circulating Pump Control

This pump (CP-4) will be started when the outside air temperature is below 45 DEGF (adjustable). Above 45 DEGF this pump will be off.

Heat Recovery System Control

This system will be manually enabled by a switch located on the control panel. When the system is enabled and the supply fan is on the circulating pump HRC-1 will run, control valve CV-3 will be modulated to maintain a minimum 40 DEGF (adjustable) supply water temperature to the preheat coil PHC-1, outdoor economizer damper (OED) and exhaust economizer damper (EED) will be commanded to full air flow thru their respective coils. When the system is disabled or when the supply fan is off the circulating pump will be off and CV-3 will be commanded to full flow thru the preheat coil. When the system is disable and the supply fan is on, the OED damper will be modulated in unison with the units outside air damper and the EED damper will be modulated in unison with the units exhaust air damper.

Discharge Air Static Control

When the supply fan is on the controller will modulate the supply fan VFD to maintain the discharge air static setpoint. The return fan VFD will be modulated in unison with the supply fan VFD. The 875 CFM difference between the supply CFM and the return CFM will be maintained by the balancing of the supply and return fans.

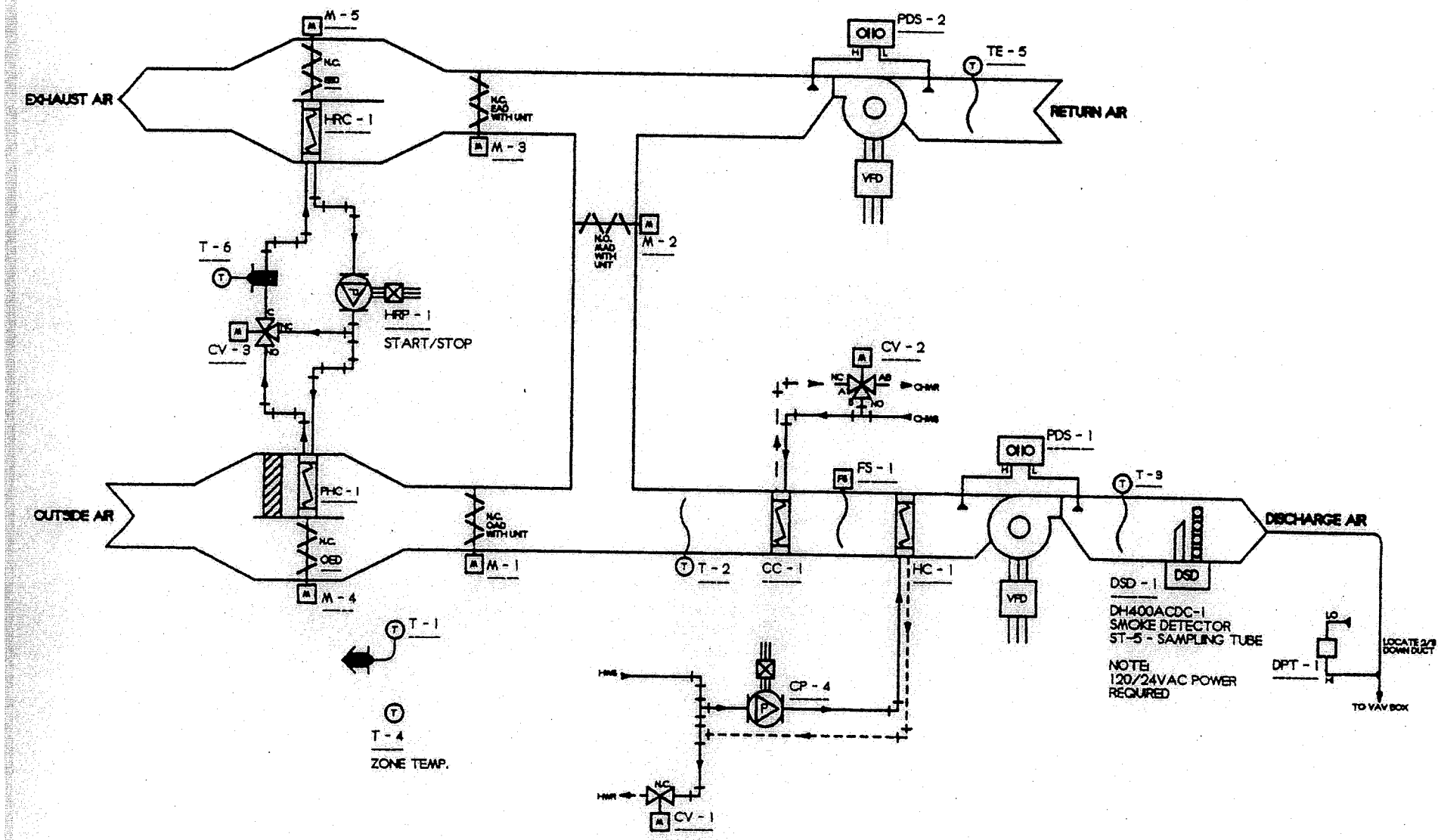

AHU FLOW DIAGRAM

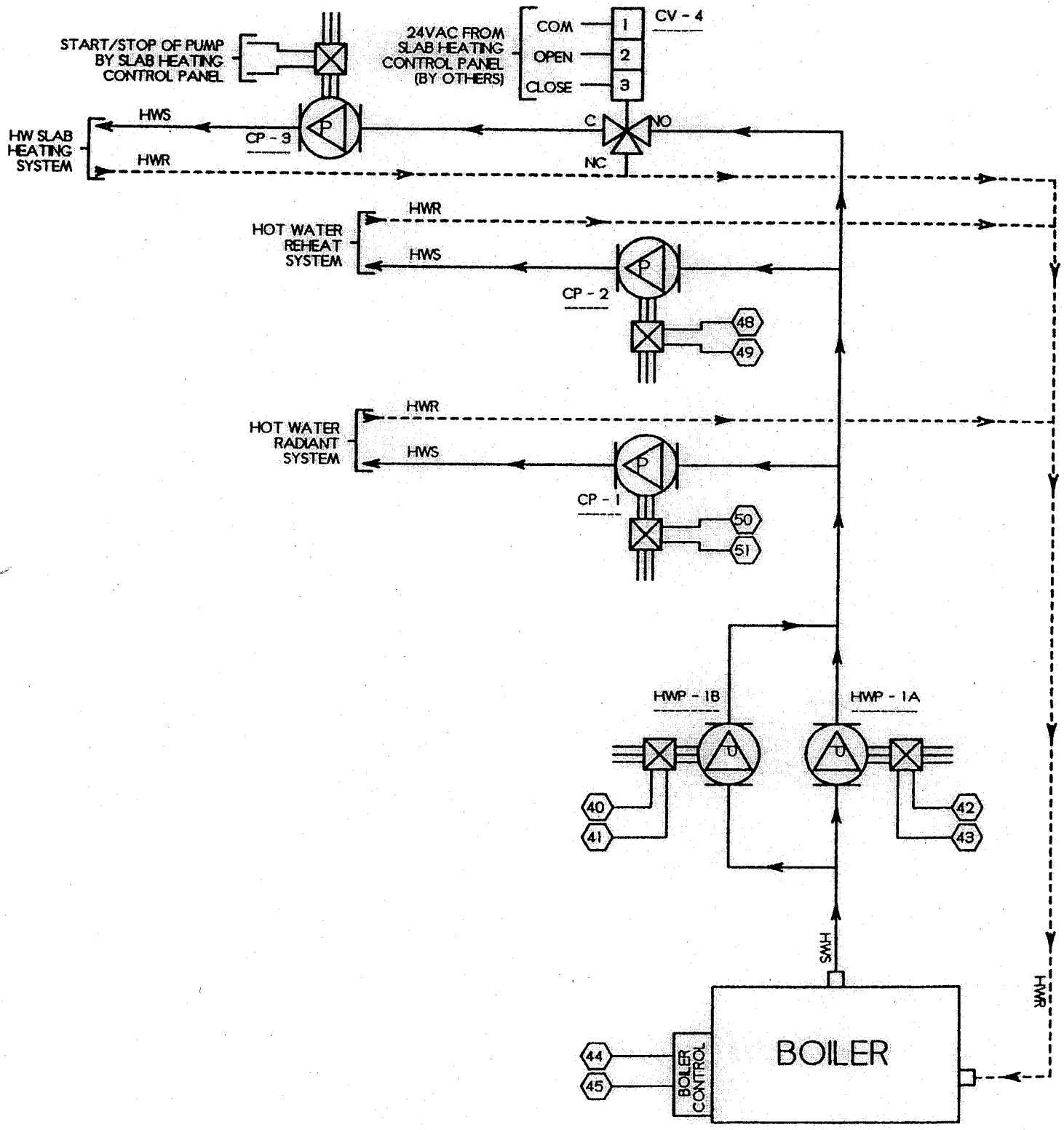

HEATING FLOW DIAGRAM

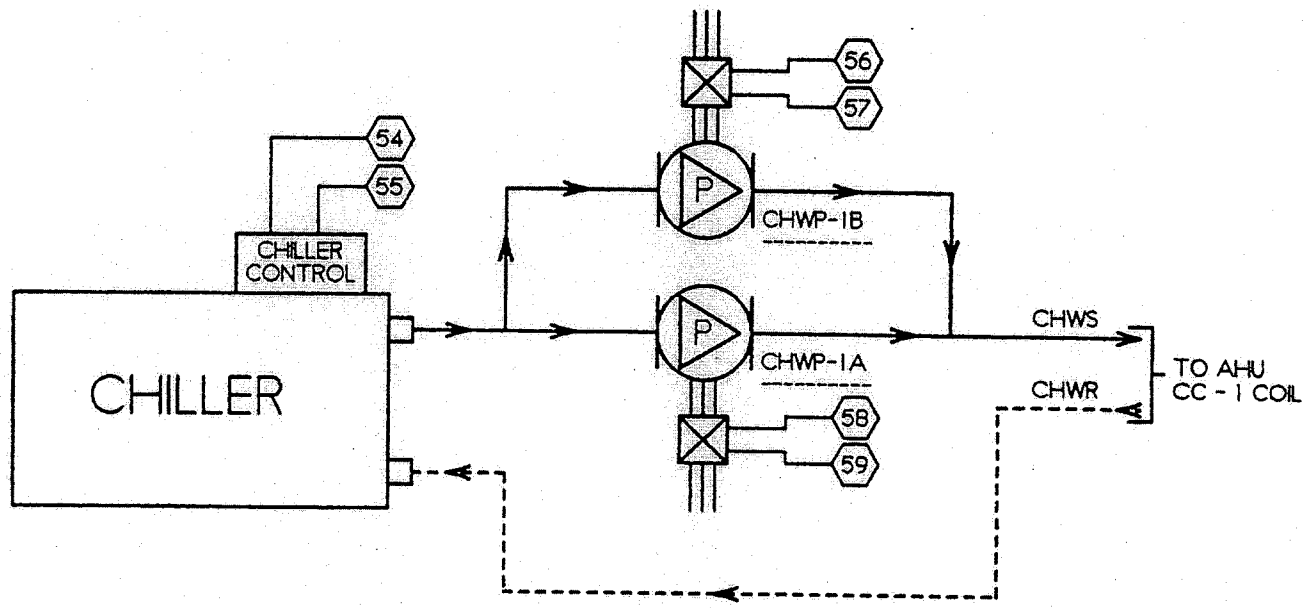

CHILLED WATER SYSTEM FLOW DIAGRAM

VALVE SCHEDULE

Date: 6/8/97
Revision Date: 8/12/97

JOB NAME: Melvin Price Visitor Center
CONTRACTOR: G.R.P. Company
CONTRACT NO: RD2320

ITEM	TAG	QTY	SERVICE	VALVE CODE #	VALVE TYPE	VALVE SIZE	FAIL	GPM/#HR	CALC CV	ACTUAL CV	PRESS DROP	ACTUATOR INFO PART NUMBER	ACTUATOR INFO SPRING RANGE	
1	FT-1	1	HW	J635C0406GA00	2-WAY	3/4	N.C.	0.5	0.3	0.9	0.3			
2	FT-1	1	HW	J635C0406GA00	2-WAY	3/4	N.C.	0.5	0.3	0.9	0.3			
3	FT-2	1	HW	J635C0406GA00	2-WAY	3/4	N.C.	0.5	0.3	0.9	0.3			
4	FT-2	1	HW	J635C0406GA00	2-WAY	3/4	N.C.	0.5	0.3	0.9	0.3			
5	FT-3	1	HW	J635C0406GA00	2-WAY	3/4	N.C.	0.5	0.3	0.9	0.3			
6	FT-3	1	HW	J635C0406GA00	2-WAY	3/4	N.C.	0.5	0.3	0.9	0.3			
7	FT-4	1	HW	J635C0406GA00	2-WAY	3/4	N.C.	0.6	0.3	0.9	0.3			
8	FT-5	1	HW	J635C0406GA00	2-WAY	3/4	N.C.	0.5	0.3	0.9	0.3			
9	FT-5	1	HW	J635C0406GA00	2-WAY	3/4	N.C.	0.5	0.3	0.9	0.3			
10	RHC-9	1	HW	J635C0406GA00	2-WAY	3/4	N.C.	0.5	0.3	0.9	0.3			
11	RHC-8	1	HW	J635C0406GA00	2-WAY	3/4	N.C.	1	0.6	0.9	1.2			
12	RHC-7	1	HW	J635C0406GA00	2-WAY	3/4	N.C.	2	1.2	2.3	0.8			
13	RHC-6	1	HW	J635C0407GA00	2-WAY	3/4	N.C.	2	1.2	2.3	0.8			*
14	RHC-5	1	HW	J635C0407GA00	2-WAY	3/4	N.C.	2	1.2	2.3	0.8			*
15	RHC-4	1	HW	J635C0407GA00	2-WAY	3/4	N.C.	2	1.2	2.3	0.8			*
16	RHC-3	1	HW	J635C0406GA00	2-WAY	3/4	N.C.	1	0.6	0.9	1.2			
17	RHC-2	1	HW	J635C0407GA00	2-WAY	3/4	N.C.	2	1.2	2.3	0.8			*
18	RHC-1	1	HW	J635C0407GA00	2-WAY	3/4	N.C.	2	1.2	2.3	0.8			*
19	CV-1	1	HW	VG7241PT+926HGA	2-WAY	1 1/4	N.O.	29.5	17.0	18.5	2.5	M9216-HGA-2	1-10VDC	
20	CV-2	1	CW	VB-4322-11	3-WAY	3	MIX	137	79.1	80	2.9	Valve	1-10VDC	
				M150GGA-3								Actuator		
				Y30EBD-3								Linkage		
21	CV-3	1	HW	VG7842RT+7152G	3-WAY	1 1/2	MIX	50	28.9	28.9	3.0	VA-7152-1001	1-10VDC	
22	CV-4	1	HW	VG7842LT+7150G	3-WAY	3/4	MIX	11	6.4	7.3	2.3	VA-7150-1001	Increment	

* Indicates revised item

Damper Schedule

JB NAME:
Melvin Price Visitor Center

Page: 1 of 1
Date: June 8 1997
By: KAN
Job No.: RD2320

NTRACTOR:
G.R.P. Company

Tag			Damper Information								Actuator Information		
em	System	Service	Qty	Code No.	Fail Pos.	Dmpr Type	Dmpr. Oper.	Damper Size Width	Damper Size Height	Smk Dmpr Options	Code No.	Control Range	Comments
1	AHU	OED (PHC-1)	1	COVAS-480x120	NC	Control	Opposed	48"	12"		M9216-HGA-2	2-10VDC	
2	AHU	EED (HRC-1)	1	COVAS-480x120	NC	Control	Opposed	48"	12"		M9216-HGA-2	2-10VDC	
3	AHU	Outside Air	1	Ev Others	NC	Control					M9216-HGA-2	2-10VDC	
4	AHU	Return Air	1	Ev Others	NC	Control					M9216-HGA-2	2-10VDC	
5	AHU	Exhaust Air	1	Ev Others	NC	Control					M9216-HGA-2	2-10VDC	
6													
7													
8													
9													
10													
11													
12													
13													
14													
15													
16													
17													
18													
19													
20													
21													
22													
23													
24													
25													

ak Dmpr Options: K - 16" Sleeve, P - Pilot Positioner, Q - Internally Mount Actuator, T - Left-Hand Mount Actuator, X - 24 VAC Electric Actuator, Y - Switches on Electric Actuator, Z - 24VAC and Switches on Electric Actuator

Approval: _____